Modeling and Performance of Sinusoidal PWM based D-STATCOM

C. N. Bhende and G. K. Singh

***Abstract*—The load demand at the consumer end keeps on changing, and hence, the reactive power consumption by the load also changes. This paper, therefore, investigates the performance of STATCOM (Static Synchronous Compensator) under different load conditions. A typical 25 kV distribution network is considered. A sinusoidal PWM based STATCOM is connected at distribution end to meet the reactive power demand of the load. A controller based on synchronous frame d-q theory is provided to offer reactive power compensation, ac voltage control and dc bus voltage control. The simulation results in Matlab are shown in the paper to support the theory.**

***Index Terms*—Reactive power compensation, voltage control, PWM, STATCOM, synchronous frame *d-q* theory.**

I. Introduction

One of the important issues in the control of electric energy systems is the reactive power control. Day by day increase in load demand and hence reactive power consumption by the load is serious problem for electric power system utility. Reactive power increases the transmission system losses, reduces the power transmission capability of transmission lines and can cause large amplitude variations in the receiving-end voltage. Reactive power compensation has been traditionally handled with devices such as: Thyristor-Controlled Reactors (TCR) and Thyristor-Switched Capacitors [1]. However, if high dynamic performance is required, reactive power compensation must be handled with faster devices such as Static Compensator (STATCOM) [2].

Recent advances in the power handling capabilities of static switches like GTO's and IGBT's have made the voltage source inverters (VSI) feasible to use PWM technique for high power applications at both transmission and distribution level.

II. Theory Of D-STATCOM Operation

This paper focuses on the control of sinusoidal PWM based STATCOM connected at distribution end which is called as D-STATCOM. The purpose is to meet the reactive power demand by the load.

C. N. Bhende is with the Department of Electrical Engineering, Indian Institute of Technology, Roorkee, India – 247667 (e-mail: cnbhende@rediffmail.com)

G. K. Singh is with the Department of Electrical Engineering, Indian Institute of Technology, Roorkee, India – 247667 (Fax: + 91-1332-273560, e-mail: gksngfee@iitr.ernet.in)

Fig. 1 shows a schematic diagram of a typical distribution network in which STATCOM is connected in shunt with the varying load.

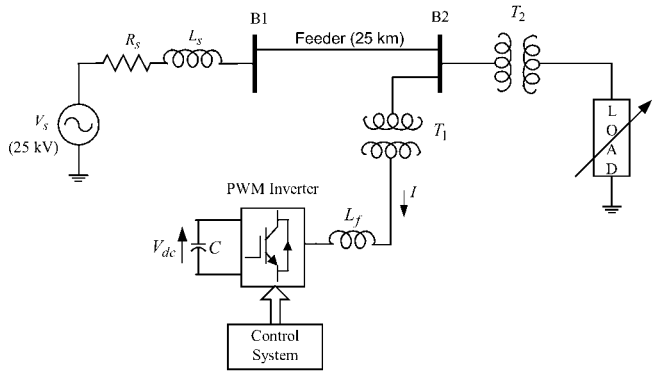

Fig. 1. Schematic diagram of D-STATCOM connected to distribution network

The STATCOM mainly consists of a PWM inverter and a dc storage capacitor to provide the dc voltage to the inverter. The capacitor is charged with the power taken from the network. The control system ensures the regulation of the bus voltage as well as dc link voltage.

The controller of STATCOM is used to operate the inverter in such a way that the phase angle between the inverter voltage and line voltage is dynamically adjusted so that the STATCOM generates or absorbs desired VAR at the point of connection [3]. This reactive power transfer is done through the leakage reactance of the coupling transformer T_1. The phasor diagram shown in Fig. 2 illustrates the D-STATCOM operation. When the inverter voltage (V_D) is lower than the bus voltage (V_{B2}), the D-STATCOM acts like an inductance absorbing reactive power from the bus. When the inverter voltage (V_D) is higher than the bus voltage (V_{B2}), the D-STATCOM acts like a capacitor generating reactive power from the bus. The injected current I is almost in quadrature with the line voltage, thereby emulating an inductive or capacitive reactance at the point of connection with the bus. In steady state, due to inverter losses the bus voltage always

leads the inverter voltage by a small angle to supply a small active power.

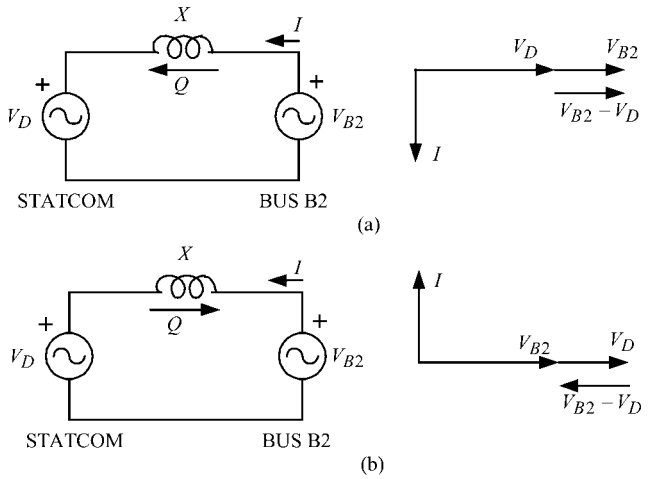

Fig. 2. STATCOM operation (a) Inductive operation, (b) Capacitive operation

III. Control Of D-STATCOM

The modeling and control of the system is carried out in synchronous *d-q* frame, which is quite standard control algorithm [3], [4], [5], [6], [7]. Under balanced steady-state conditions, the co-ordinates of the voltage and current vectors in the synchronous reference frame are constant quantities. This feature is useful for analysis and decoupled control of the *d*-axis current component (I_d) and *q*-axis current component (I_q).

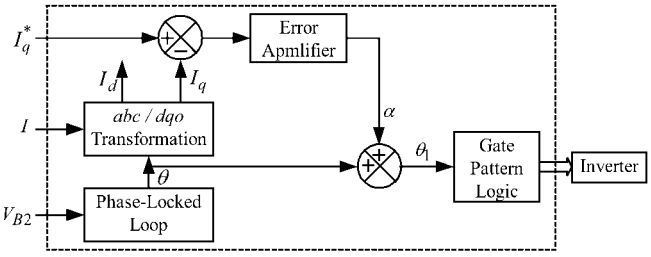

Fig. 3. Current control block diagram of D-STATCOM

Fig. 3 shows the reactive current control block diagram of the STATCOM. An instantaneous three-phase set of line voltages, at bus B2 is used to calculate the reference angle θ by using phase locked loop (PLL). An instantaneous three-phase set of inverter currents is decomposed into its real component (I_d) and reactive component (I_q). The reactive component I_q is compared with the desired reference value I_q^* and the error ($I_q^* - I_q$) is passed through an error amplifier, which produces a relative angle α of the inverter voltage with respect to the line voltage. The phase angle, θ_1, of the inverter voltage is calculated by adding the relative angle α of the inverter voltage and the reference angle θ.

If the line voltage is to be regulated, the voltage control loop must be implemented. The voltage control block diagram of a D-STATCOM is shown in Fig. 4.

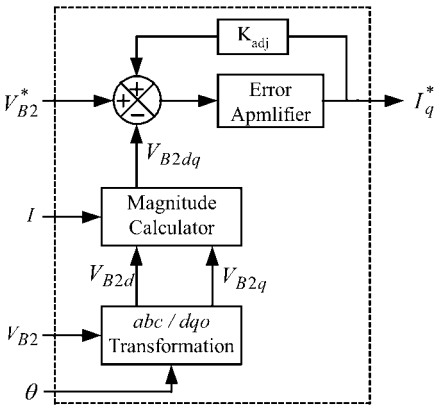

Fig. 4. Voltage control block diagram of D-STATCOM

An instantaneous three-phase set of line voltages, at bus B2 is decomposed into its direct and quadrature components V_{B2d} and V_{B2q} respectively. The magnitude V_{B2dq} $\left(=\sqrt{(V_{B2d})^2 + (V_{B2q})^2}\right)$ is compared with the desired reference value V_{B2}^* (adjusted by the factor, K_{adj}) and the error is passed through an error amplifier, which produces I_q^* for current controller. The factor K_{adj} adjusts the voltage error so that rated reactive current flow through the STATCOM.

IV. Modeling Of D-STATCOM

The controlling of D-STATCOM is explained in the section III where controlling of reactive current and terminal voltage is studied. These control blocks are implemented in Simulink by using the Power System Blockset. The Simulink model is shown in Fig. 5.

The phase-locked loop (PLL) is synchronized to the fundamental of the voltage at bus B2 to provide the synchronous reference ($\sin\omega t$ and $\cos\omega t$) required by the *abc-dq0* transformation. The two *abc-dq0* transformation blocks are used to calculate *d*-axis and *q*-axis components of the current and voltage as shown in Fig. 5.

The *d*-axis and *q*-axis components of the AC voltage (at bus B2) are then, fed to magnitude calculator, which is further given to AC voltage controller (PI controller) to get reference for reactive current (I_q^*). The reference for I_d (I_d^*) comes from dc voltage PI controller which maintains the dc voltage (V_{dc}) at reference value.

The current regulation loop consists of two PI controllers that control the *d*-axis and *q*-axis currents. The controller outputs are the voltage *d*-axis and *q*-axis components V_d and V_q respectively. These voltages are converted into phase voltages V_a, V_b, V_c which are then compared with the carrier signal to get gating pulses.

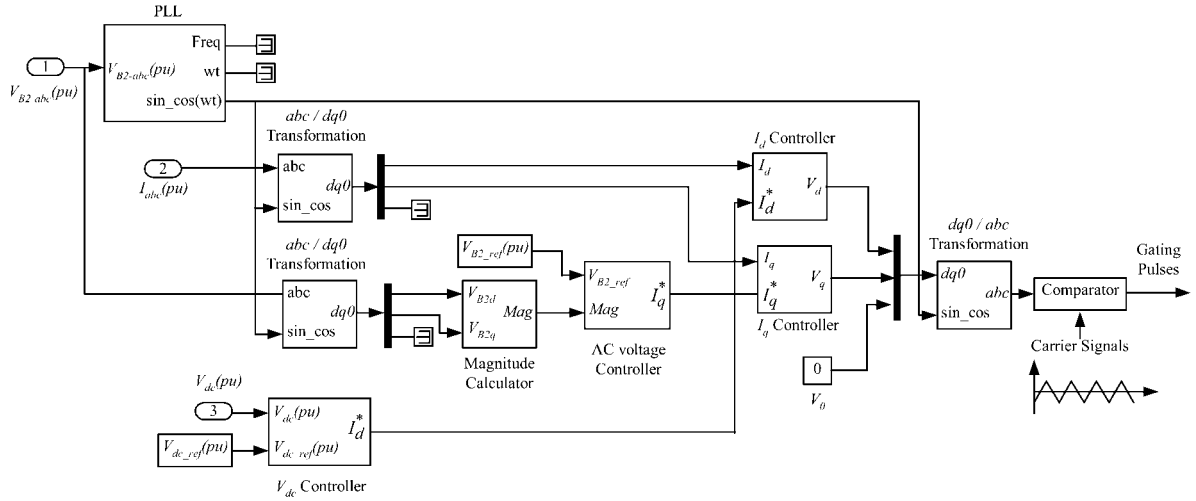

Fig. 5. Simulink model of D-STATCOM control

V. Simulation Of The D-STATCOM Operation

The simulation of D-STATCOM connected to 25 kV distribution network is carried out. A three-phase balanced load is considered.

TABLE I
SYSTEM PARAMETERS

System parameters	Values
Source voltage	25kV (line-line)
Variable Loads	a) 1 MW; 0.5 MVAR b) 1 MW; 0.6 MVAR c) 0.9 MW; 0.55 MVAR
Filter Inductance (L_f)	5 mH
DC capacitor	10000 μF
Carrier Frequency	1000 Hz

The structure of voltage source inverter consists of six IGBT's each with anti-parallel diodes and a dc storage capacitor. A filter inductance L_f is connected at the inverter output to absorb the harmonics. The various system parameters are given in TABLE I.

The performance of STATCOM is analysed for three different loads as given in Table 1. First of all, 1 MW; 0.5 MVAR load is considered for the reactive power compensation. The reactive power required at the point of connection (bus B2) should be supplied by the compensator. The average reactive power supplied by the compensator and required at bus B2 are same, which is shown in Fig. 6. The instantaneous powers are shown in Fig. 7. The voltage across the dc capacitor is maintained at a reference value by using PI controller. Voltage across dc capacitor is shown in Fig. 8. The line to line voltage at inverter output terminals is shown in Fig. 9. The ac voltage at point of connection of D-STATCOM (Bus B2) is maintained at 1 pu by using ac voltage regulator (PI controller). Three-phase voltages are shown in Fig. 10. The three-phase STATCOM currents are shown in Fig. 11. The total harmonic distortion (THD) in ac voltages is 3.16% and in STATCOM currents, the THD is 1.49% which is within permissible limit. Since three-phase quantities are balanced, the THD is same for all three phases. The output of ac voltage regulator is nothing but reference for reactive current component (I_q^*), which is coming out to be 0.09 pu and corresponding modulation index (MI) is 0.27 which is shown in Fig. 12(a). Since, STATCOM is supplying the whole reactive power required at Bus B2, source will supply the reactive power required only by source and feeder impedance and the average reactive power supplied by the source is shown in Fig. 12(b).

If the load is changed to 0.9 MW; 0.55 MVAR, the I_q^* becomes 0.13 pu to compensate the required reactive power. The average reactive power supplied by the STATCOM and required at bus B2 are shown in Fig. 13. The corresponding value of modulation index is 0.46. When the load is changed to 1 MW; 0.6 MVAR, the I_q^* becomes 0.17 pu to compensate the required reactive power. The average reactive power supplied by the compensator and required at bus B2 are shown in Fig. 14. The corresponding value of modulation index is 0.74.

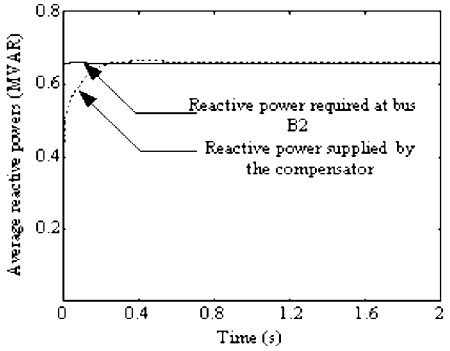

Fig. 6. Average reactive power required at bus B2 and supplied by compensator

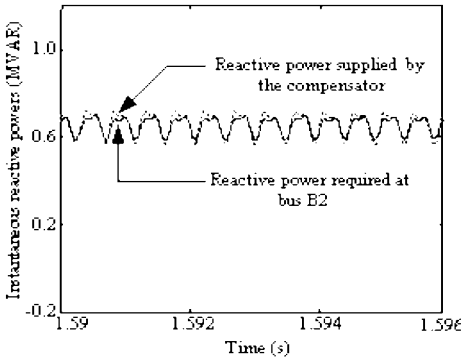

Fig. 7. Instantaneous reactive power required at bus B2 and supplied by compensator

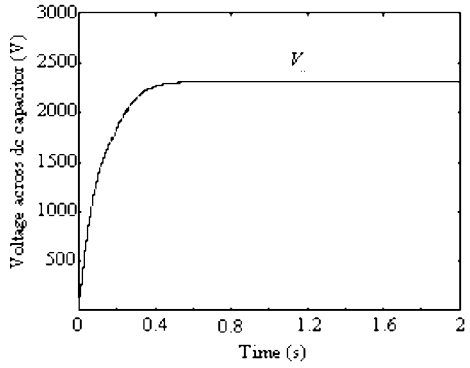

Fig. 8. Voltage across dc capacitor

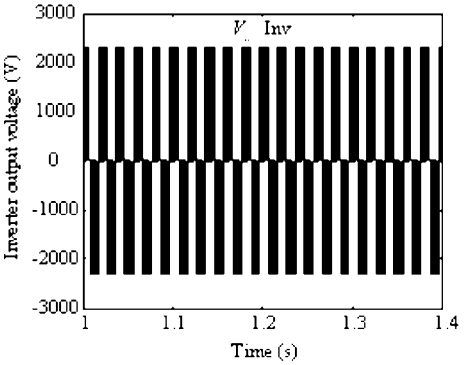

Fig. 9. Output voltage of the inverter

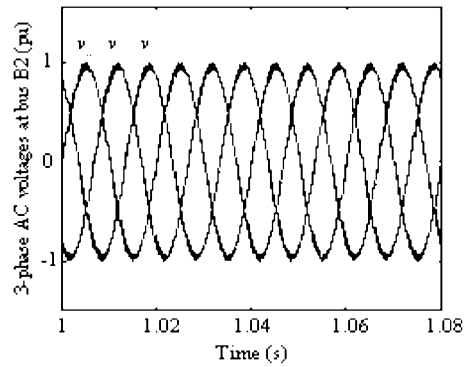

Fig. 10. Three-phase voltages at bus B2

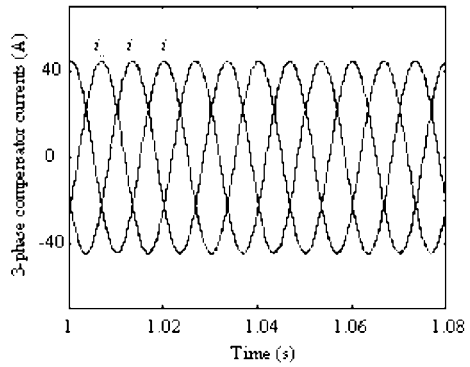

Fig. 11. Three-phase STATCOM currents

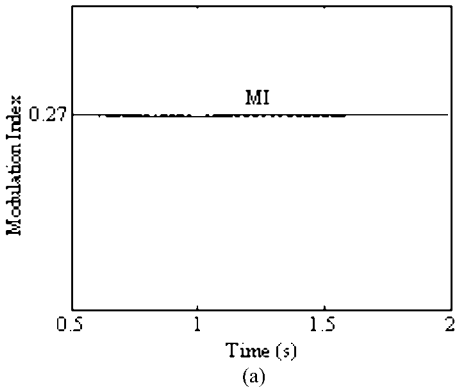

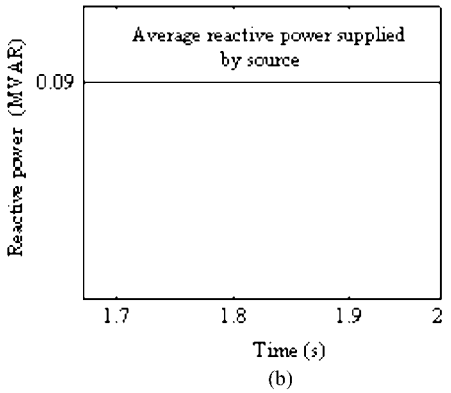

Fig. 12. (a) Modulation Index (b) Reactive power supplied by the source

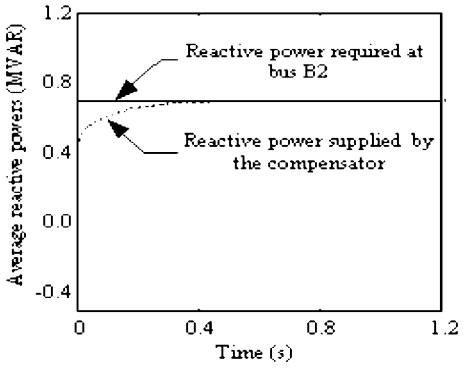

Fig. 13. Average reactive power required at bus B2 and supplied by compensator

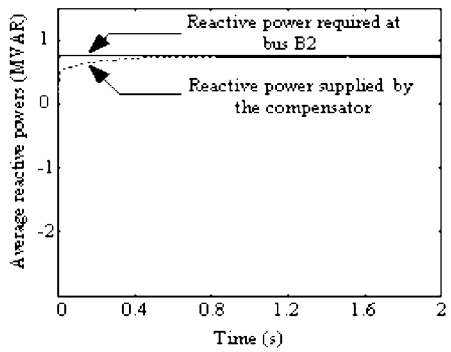

Fig. 14. Average reactive power required at bus B2 and supplied by compensator

V. Conclusion

In this paper modeling and simulation of a sinusoidal PWM-based STATCOM connected to a 25 kV distribution network has been presented. A detailed simulation model has been developed in Simulink. Reactive power control is the primary aim of a STATCOM but decoupled control of real power is also evaluated, which is necessary for PWM converter control. The load at the consumer end is always changing; the reactive power demand also changes with the load. The proposed D-STATCOM gives the better results meeting the reactive power demand under different load conditions.

Acknowledgement

Authors would like to thank to the Council of Scientific and Industrial Research (CSIR), Govt. of India, New Delhi, for financial support towards this investigation.

References

[1] A.-A. Edris, R. Adapa, M. H. Baker, L. Bohmann, K. Clark, K. Habashi, L. Gyugyi, J. Lemay, A. S. Mehraban, A. K. Myers, J. Reeve, F. Sener, D. R. Torgerson, and R. R. Eood, "Proposed terms and definitions for flexible AC transmission system (FACTS)," *IEEE Trans. on Power Delivery*, vol. 12, no. 4, pp. 1848–1853, Oct. 1997.

[2] L. Gyugyi, "Solid-state synchronous voltage sources for dynamic compensation and real-time control of AC transmission lines," *IEEE Emerging Practices in Technology*, 1993.

[3] C. D. Schauder and H. Mehta, "Vector Analysis and Control of Advanced Static VAR Compensators," *IEE Proc.-C*, vol. 140, no. 4, pp. 299-306, July 1993.

[4] C. K. Sao, P. W. Lehn, M. R. Iravani and J. A. Martinez, "A Benchmark System for Digital Time-Domain Simulation of a Pulse-Width-Modulated D-STATCOM," *IEEE Tran. On Power Delivery*, vol. 17, no.4, pp. 1113-1120, Oct. 2002.

[5] K. K. Sen, "STATCOM: Theory, Modeling, Applications," *in IEEE PES 1999 Winter Meeting Proc.*, pp. 1177-1183.

[6] S. Bhattacharya and D. Divan, "Synchronous frame based controller implementation for a hybrid series active filter system," in *Conf. Rec. IEEE-IAS Annu. Meeting*, 1995, pp. 2531–2540

[7] J. Sun, D. Czarkowski and Z. Zabar, "Voltage Flicker Mitigation Using PWM-Based Distribution STATCOM," *Power Engineering Society Summer Meeting, 2002 IEEE*, vol. 1 21-25 July 2002, pp. 616-621.

C. N. Bhende received M. Tech degree from Visvesvaraya National Institute of Technology, Nagpur, India (Formerly VRCE), in 2003. He is currently working as a Senior Research Fellow in Electrical Engineering Department, Indian Institute of Technology, Roorkee, India. His field of interest includes power systems and power electronics.

G. K. Singh received B.Tech. degree from G. B. Pant University of Agriculture and Technology, Pantnagar, in 1981.and Ph.d degree from Banaras Hindu University, Varansi in Electrical Engineering, in 1991. He worked with industries for nearly five and half years. He joined as Lecturer in M. N. R. Engg. College, Allahabad in 1991 and then, shifted to University of Roorkee. Currently he is Professor in the Electrical Engineering Department, Indian Institute of Technology, Roorkee (formerly known as University of Roorkee). He has served as Visiting Associate Professor in Pohang University of Science and Technology, South Korea. He is recipient of Pt. Madan Mohan Malaviya Memorial Medal and Certificate of Merit. He has co-ordinate a number of research projects sponsored by CSIR and UGC, Government of India. His main research interests are electric machines and drives, power systems.