"ANALYSIS OF THE BEHAVIOUR OF THE PUERTO MONTT, BANCO CENTRAL DE CHILE STRUCTURE"

Pedro HIDALGO 1.

Jorge VASQUEZ 2.

"ANALYSIS OF THE DAMAGE CAUSED BY THE 1960 EARTHQUAKES IN A BUILDING OF THE CHIPRODAL FACTORY IN LLANQUIHUE, CHILE"

Hernan ROJAS 3.

1. Civil Eng. Prof. P. Hidalgo, 2. Civil Eng. J. Vasquez, 3. Civil Eng. H. Rojas have worked under the sponsorship of the Committee of Earthquake Engineering of the Scientifical and Technological Research Department of the Catholic University of Chile.

THE DEPARTMENT OF SCIENTIFICAL AND TECHNOLOGICAL RESEARCH
OF THE CATHOLIC UNIVERSITY OF CHILE

1.1. The Scientifical and Technological Research Department of the Catholic University of Chile (DICTUC) has developped in the past time a series of studies whose rpincipal object, in the first stage, has been to investigate the design of earthquake resistant structures and to analize the damages suffered by structures affected by the great 1960 chilean earthquake.

For the conduction of this investigation a Committee was organized whose members were: Civ. Eng. Prof. César Barros L.; Civ. Eng. Prof. Luis Crisosto; Civ. Eng. Prof. Arturo Morales; Civ. Eng. Prof. Hernán Ayarza; Civ. Eng. Prof. Jorge Troncoso. This Committee was responsible for the direction and planning of the different studies that had to be developped by civil engineers and graduates of our University.

The work now presented analizes two structures whose plans were completely available and gave the possibility of a complete calculation and static control. The selected structures were only partially damaged. Badly damaged structures are not adequate for such investigation due to the fact that in their analysis it is difficult and even impossible to determine the exact origin of failures. Generally the serious plastic deformations would entail a redistribution of stresses and strains produced during the elastic stage, introducing more difficulties in the analysis of the proposed problem.

Both investigations have been conducted in the sense of analyzing the structures with conventional static and dynamic methods including effects of shear deformations and rotation of foundations in the distribution of seismic forces, in case I. The results of these computations have been compared with the observed damage. In case II only the static analysis has been made and the dynamic analysis is under development and shall be informed in a future report.

1.2 Acknowledgment

Those studies has been undertaken as part of the program developped by DICTUC under the conduction of Prof. César Barros Luther, civil engineer and developped by civil Eng. Prof. Pedro Hidalgo and civil Eng. Jorge Vasquez in case of Building I and Civ. Eng. Hernán Rojas in case of Building II. This investigation has been sponsored by the Instituto de Ingenieros de Chile.

2.0 ANALYSIS OF THE BEHAVIOUR OF THE PUERTO MONTT, BANCO CENTRAL DE CHILE STRUCTURE (I)

This building has been chosen due to the fact that it suffered few structural failures during the earthquakes in May, 1960.

2.1 Characteristics of the building

The building under consideration is built on sand and ancient alluvial gravel and is very compact. This information, added to the fact that the foundations which affect the elements of rigidity are all continuous, presupposes that they will only be affected by gyrations, and we may discard the possibility of important differential settlements. This assumption is corroborated by the fact that no cracks or failure in the foundations have been observed.
The building in reference is totally built of reinforced concrete, and has been built according to the usual construction techniques of the country. The reinforced concrete used is of an average acceptable quality.

2.2 Damage produced by the earthquakes

The damage observed in the building after the earthquakes is principally concentrated around a part of the structure, that is, the intersection of axis 1 and B. (According to indications on the Figs. 10, 11 and 12).

These in detail were as follows:

1.- Columns C-1 and D-1 between the second and the third floor (Figs. 6 and 7).
2.- The lintel of the ceiling on the second floor which meets column D-1 (Fig. 6).
3.- The beam in the ceiling on the second floor which meets element A/B-1 according to axis B.
4.- The beam in the ceiling on the second floor which meets element A/B-1 according to axis B.
5.- Element A/B-1, broken in its paraments (inside Fig. 8 and outer Fig. 9) at the height of the ceiling on the second floor.

2.3 Study and estimation undertaken:

To undertake an evaluation of the horizontal forces due to the earthquake action and the distribution at the ceiling level of each floor according to Chilean Code and to Dynamic Analysis, it was necessary beforehand to undertake the computation of volume of the building and locate the center of mass of the three levels with respect to the coordinated axis chosen in the plans: axis B as X and axis 1 as Y.
The application of the Chilean Code for the evaluation of the horizontal forces, was made for a seismic coefficient of 0.20 g.

For the Dynamic Analysis the spectrum of the north-south component of the earthquake which occured in "El Centro" California, USA, on May 18th., 1940, was considered.
With the object of expediting the comparison with the results obtained upon applying the Cjilean Code, we proportionately modified the horizontal forces for each floor from which the Dynamic Analysis was made, and the total horizontal force was 20% of the weight of the building.
For the analysis of the distribution of internal stresses brought about by the horizontal forces obtained from calculations, we used the Degrees of Fixation Method, according to the development made by Messrs. César Barros and Alex Tripolsky.
This is a method which enables us to increase the precision to the convenient degree of accuracy by means of an iterative process. It includes deformation due to shear in the members of the structure and rotation of the foundations, and makes possible, thanks to, its close relationship with the Forces Method (Müller Breslau), to cover jointly elements whose analysis is individually impracticable. It also provides different stages of verification and is specially apt for teamwork.
This method gives us the displacement of each element of the structure; from which can be deduced the moment diagrams and the displacement diagrams which are attached to the report (Figs. 1, 2, 3 and 4).
Studying those diagrams it is interesting to note that the greatest assymetry of resistent elements in direction X, lead to a much more pronounced torsion effect, which could have been intuitively foreseen.
In the same way, the proximity of the center of rotation to the area which at first sight could be said to be the most rigid in the building, is a result which could be expected.
It is interesting to point out the importance of the differential displacements between the second and third floor for the earthquake in direction X, which are very acute at the end that corresponds to the intersection of axis 1 and B.
This effect is notoriously greater in the case of distribution according to the Dynamic Analysis, and we will later see that it will be the fundamental cause of some of the damage observed in this building.

2.4 Comparison of the results obtained with the effects of the earthquake.

Knowing the displacement of each element we are able to obtain the respective bending moment diagrams. Using the moment values and shear of the elements damaged, we calculated the sections which were damaged and also those for which the high solicitation values calculated made us assume precarious resistance conditions, but actually had not been damaged.

The analysis of each one of these elements leads to the following conclusions:

a.- Columns C-1 and D-1 - between the second and third floor.

These columns which suffered destructive damage, had been overdimensioned for whatever distribution of horizontal forces considered. Due to the important reinforcing percentage of steel, this could be considered as a serious discrepancy between calculation hypothesis and reality. Nevertheless, this apparent non-coincidence, is explained by the fact that these columns were greatly weakened by the insertion of heating piping, and also in one of them, the most seriously damaged, by the insertion of a value box that frankly weakened it.

b.- Ceiling lintel on the second floor which meets column D-1.

This lintel is of capital interest because its failure is a clear consequence of the minor importance commonly given to this type of structural element. Normally its section could be considered sufficiently strong and its investigation unnecessary, but in this calculation its influence has been considered in spite of the complexity of the structure, and results confirm the appearance of failures. Considering the distribution of horizontal forces of Chilean Code, it appears that it is submitted to a moment of 3.4. ton-m in the most unfavourable case, and the rupture calculation assigns to it a maximum resistance moment of 2.7 ton-m. If the distribution of horizontal forces is made according to the Dynamic Analysis, the moment in the lintel would be 4.35 ton-m, which represents an even more unfavourable situation.

c.- Ceiling beam at the second floor which meets element A/B-1 at axis 1.

This beam forms part of an assembly of elements which cannot be isolated for the evaluation of the elasticity constants of the building, and therefore the forces developed in this element are only known by means of special considerations. It was analysed as a rigid frame-work formed by the beams of the second and first floors in axis 1 and column C-1, strengthened by a masonry wall inserted in it.

The forces and moments finally obtained, show that the beam on the second floor was correctly dimensioned according to the elastic calculation, and that of the first floor element was clearly overdimensioned.

If we undertake the calculations without considering the existence of the masonry wall, both beams appear as being stressed beyond their maximum capacity, specially the beam on the second floor where this effect is more pronounced.
It is important to note that the masonry wall was built after the rigid framework was finished. It is therefore logical to presume that the elastic influence of the wall will be an intermediate position between the first and the second assumption, which agrees better with the results of the calculation and the observed damage. It may be clearly seen that this intermediate state gives a good agreement with the observed rupture of the beam on the second floor and the absence of damage on the beam on the first floor.
In the Dynamic Analysis, the values obtained are slightly less, but proportionately within the same limits so that the conclusions derived from this static analysis are even valid for the dynamic analysis.

d.- Ceiling beam on the second floor which meets element A/B-1, at axis B.

The maximum moment rupture capacity of this beam is 5,75 ton-m. According to the Dynamic Analysis, the moment shall be 6.7 ton-m, value which amply justifies its rupture. If we consider the Chilean Code, the moment will reach only 5.26 ton-m, which would give us no definite certainty of rupture but at least will justify the appearance of certain cracks.
The steel section required 5.8 cm^2. The actual reinforcement was only 3.4 cm^2.

e.- Element A/B-1, broken in its two plates, at the height of the second floor ceiling.

The serious damage this element suffered, as can be seen from Fig. 9 is not justified immediately. Thus, if we calculate the work fatigue due to torsion, this will not be sufficient to produce the rupture. The values for the stresses are numerically unimportant 740 kg-cm^2 for the steel, 70 kg/cm^2 for the concrete and 5 kg/cm^2 for shear stress.

We could presume also that the failure was due to torsion effect in the element itself; nevertheless, we obtain a stress of 0.8 kg/cm2, which added to the above shear stress does not reach a value that can be considered dangerous.

We can see that the displacement between the second and third floor is serious: 0.14 cm. Such displacement made each one of the walls constituting this element act as a beam of about 3 m. span. With this hypothesis we obtain in the lower end a moment of about 680 kgm, which value agrees with the rupture moment of the wall calculated for the reinforcing steel available at its section in a 1 mt. wide beam. This justified the cracking of concrete in this section and also the appearance of the horizontal crack at the second floor level. It should be noted that in the A/B-6 twin element, not being in contact with the second floor which restricts its desplacement, is not submitted to a similar effect, this being in accordance with the non-appearance of cracks. Of course, in this element there is a displacement of 0.20 cm. but produced between the first and third floor, and the span of the wall acting as a beam is of more than 6 m, which makes that the moment indiced falls within acceptable limits, in accordance with the steel reinforcement provided in it.
The above indicated values are obtained by applying the Chilean Code. The corresponding Dynamic Analysis gives substantially higher values, specially as to displacement between the second and third floor. This fact confirms our opinion that this displacement has been the main cause of destruction of this element.

3.0 "ANALYSIS OF THE DAMAGE CAUSED BY THE 1960 EARTHQUAKES IN A BUILDING OF THE CHIPRODAL FACTORY IN LLANQUIHUE, CHILE" (II)

3.1 Characteristics of the Building

It is a six floor industrial building of reinforced concrete. The dimensions of the first two floors are 14 m. wide by 24 long. The upper floors are of the same width 18 m. long. The height is 20.10 m. The building is practically symmetrical as to length refers. The slabs are of reinforced concrete, some of which have large openings or cover only part of the surface of the floor.

Foundations are 2 m. deep. The outer walls have continuous footings and the inside columns have spread footings. No precise information from the point of view of soil mechanics was available. Geology of the zone permits to predict the presence of fine soils of alluvial origin. This lack of information is not very important because the observation of the damage does not show failures due to differential settlements or cracks of the foundations.

The seismic element are the four outer walls. There are no inside dividing partitions, except on the top floor. Therefore, damping in the structure is that characteristic of reinforced concrete.

When the earthquake ocurred, the building had just been finished and only carried its own load.

The building is separated by means of expansion joints with two neighbouring constructions one floor high.

See figures No. 13 to 16.

3.2 Damage produced by the earthquake.

The most serious damage was to the south wall. Columns 5, 6, 7 and 8 (see fig. 13) were practically destroyed. Columns 1, 2, 3 and 4 on the top floor, have cracks and in some places loosening of the concrete. Columns 10 and 11 have visible cracks.

There were visible cracks in some of the beams of the north wall in the vecinity of the stairway and the elevator.

3.3 Study and estimation undertaken

(a) Each seismic wall was analyzed in two stages, as follows:

1.- The wall was isolated in sections introducing hinges in points of very low rigidity, rigid zones in some joints, etc. All elements with a relation of bending high to free span sufficiently large were analyzed considering the effect of shear only.

2.- We have applied, successively, a horizontal unit force at each level of slabs and have calculated for each of these forces the stress and deformations produced in the different floors. Deformations considered are those due to rotation of foundations, bending and shear in frames, and shear only in certain extremely rigid elements.

(b) Considering the mass of the building concentrated at the level of the slabs, a lineal equation system was derived, in which horizontal forces between slabs and seismic walls were selected as unknowns. As there are six slabs and each acts on 4 walls, we obtained a total of 24 unknowns. These forces had to comply with the following conditions:

1.- In each slab, the 4 forces transmitted by it to the seismic walls, should give a resultant equal to the inertia force of this floor (3 conditions per floor).

2.- The deformations produced in the walls should be compatible with the assumption that the slabs are undeformable in their own plane (6 conditions).

As inertia forces we took a percentage of weight, varying lineally from 12.5% on the first floor to 25% at the top floor.

We have considered the earthquake acting on the direction of the short walls, as in the other direction there was no probability of failure.

(c) Knowing the horizontal forces acting on each wall, calculation was made of the seismic forces on the damaged elements. Adding the static forces due to their own weight, finally stresses produced in the concrete and steel were determined.

Parts (b) and (c) were repeated adding to the inertia forces a contrary horizontal force upon the south wall at the height of the first floor, in order to cancel the displacement at this point. The object of this investigation was to observe the influence of a possible rigidicing and shock effect of the neighbouring construction.

3.4 Comparison of the results obtained with the effects of the earthquake

With respect to columns 5,6,7 and 8 the calculations made have established that the outer column (5 or 8 according to the direction of the earthquake) undergoes traction forces combined with bending producing in the steel stresses that are over the elastic limit. It must be remembered, nevertheless, that a tractioned column has higher principal stresses than a similar compressed column, due to this fact, we can assume the column shifted part of its shear to the other columns at the same level when the initial failure occured. In any event. it has been verified that the steel reached its limit of elasticity or very near to this point. leaving this column in a bad condition to support the severe compression and bending produced when the direction of the earthquake changed.

After the two outer columns were damaged, the total shear at this level had to be resisted by the two central columns. Bending moment and shear caused by these forces upon these central columns are beyond their capacity, and they produced general breaking at this level.

With respect to columns 1,2,3 and 4, our calculations have shown that steel stresses were close to the elastic limit, but compression forces and low shear stresses were present in all the columns.

In columns 9, 10, 11 and 12, stresses were even lower.

The accelerations used for this analysis (lineal variation from 12,5% for the first floor to 25% for the top floor) have indicated the existence of stresses close to rupture in columns 1,2,3,4, and 5,6,7,8 and lower comparative stresses in columns 9,10,11 and 12.

As columns 5,6,7 and 8 were destroyed and the lower ones showed some cracks, it can be concluded that the accelerations did not incre as much on the upper floors as was assumed on the basis of the calculations. On an average acceleration seems to have been more severe than those used in the calculations. It must be stated that a general evaluation would indicate that the building was not in condition to resist an average constant acceleration of more than 20% gravity.

The additional analysis considering no displacement of the south wall at the first floor level, showed a very small variation in the seismic force distribution on the walls. It may be estimated that the eventual shock with the neighbouring buildings could contribute to produce higher seismic accelerations but had no important influence on the distribution of the seismic forces between the different resisting elements.

The Dynamical Analysis of their structure is actually under development and will be reported elsewhere later.

4.1 General Conclusions

In general we may conclude that the hypothesis made, both as to the method of determining the solicitations as also the general methods used for the distribution of the horizontal forces, lead us to results which do not greatly differ from reality. The correlation is undeniably increased if we consider a Dynamic Analysis for the distribution of the seismic forces as will be explained later in this report.

It is probably, that having used a method of calculation of more rough approximation, which did not take into account the influence of elasticity of foundations, or which had omitted the calculation of apparently secondary elements and the infleunces of shear strain, the results would not have been satisfactory. For example, the interesting failure of the lintels could not have been detected by calculation in case number 1.

It is of interest to insist on the importance of the torsion phenomenon on the structures. It is evident that if torsion had not been taken into account in the calculations, it would have been impossible to find a logical explanation for any of the failures suffered by the damaged elements.

4.2 Conclusion for Building I:

We refer to Fig. 1,2, 3 and 4 which schematically record the displacements of the three floors in the different cases. It is interesting to observe also that the torsion effect is considerably

increased in the distribution of seismic forces if it is made according to a Dynamic Analysis. This is mainly because according to this analysis, a much larger proportion is assigned to the total shear of the upper floor. The cause of this latter fact is the small mass of the ceiling of the second floor as compared to the weight of the third floor ceiling in case 1.

It is likewise interesting to emphazise the importance of a differential displacement between the ends of a columns when its ends are fixed. This effect is generally not taken into account and is, as analysis shows, the cause of destruction for column A/B-1. It would therefore, be advisable, when the relative displacement between two floors is important, to take account of this effect in the design of elastic columns which stresses are small but which strains will cause the destruction or failure of the member designed basically for conditions of support of merely vertical loads.

4.3 Conclusion for Building II.

(a) A seismic coefficient of 10% with safety factor 2 seems low for a building with no more resistant elements than those considered in the calculation.

(b) The steel ratio in columns 5, 6, 7 and 8 is 0.8%, and in columns 1, 2, 3 and 4 is 0.25%. It does not seem satisfactory to provide such low reinforcements that could produce fragile rupture and introduce sudden redistribution of forces in a definite level that can be more disastrous than the forces developped by the earthquake itself.

(c) In very short columns, it is wise to check bond stresses of the bars, because the rapid variation of stresses may have an important contribution to the failures.

(d) A dynamic analysis which would indicate a more realistic distribution of the accelerations on the different floors, would be of advantage in order to get a more accurate degree of safety.

FIG. Nº 1
X EARTHQUAKE DISPLACEMENTS
CHILEAN CODE

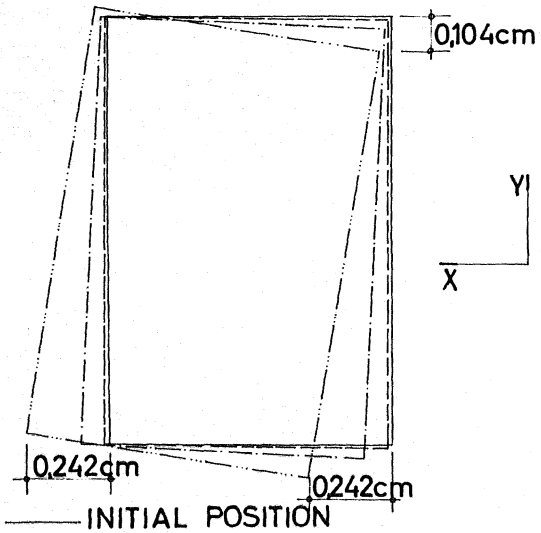

——— INITIAL POSITION
- - - - CEILING PLANT FIRST FLOOR
-·-·- CEILING PLANT SECOND FLOOR
-··-··- CEILING PLANT THIRD FLOOR
PLANT SCALE 0 2 4 6 Meters
DISPLACEMENTS SCALE 0 0,3 Centimeters

FIG. Nº 2
Y EARTHQUAKE DISPLACEMENTS
CHILEAN CODE

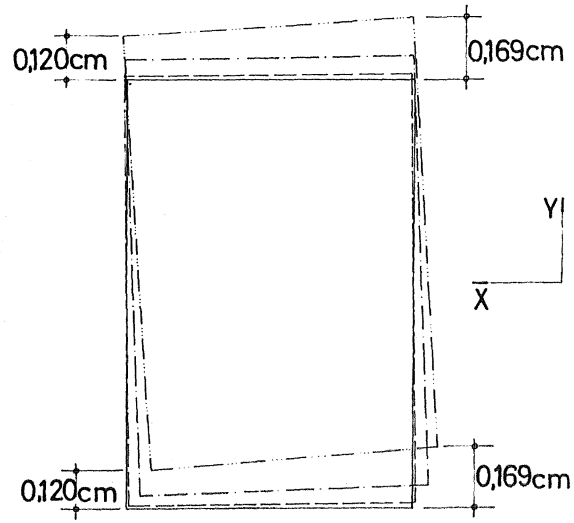

——— INITIAL POSITION
- - - - CEILING PLANT FIRST FLOOR
-·-·- CEILING PLANT SECOND FLOOR
-··-··- CEILING PLANT THIRD FLOOR
PLANT SCALE 0 2 4 6 Meters
DISPLACEMENTS SCALE 0 0,3 Centimeters

FIG. Nº 3
X EARTHQUAKE DISPLACEMENTS
DYNAMIC ANALYSIS

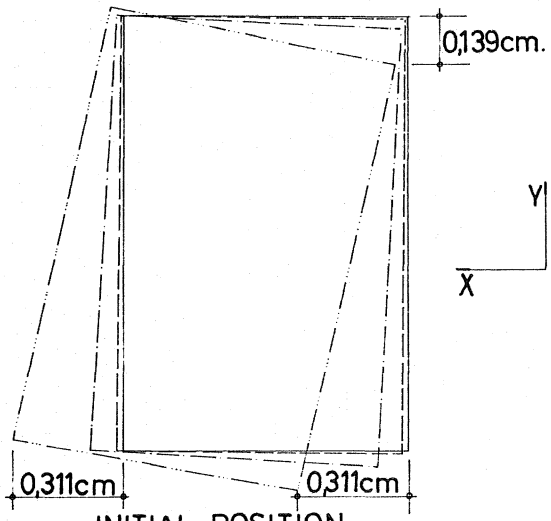

——— INITIAL POSITION
- - - - CEILING PLANT FIRST FLOOR
—·— CEILING PLANT SECOND FLOOR
—··— CEILING PLANT THIRD FLOOR
PLANT SCALE 0 2 4 6 Meters
DISPLACEMENTS SCALE 0 0,3 Centimeters

FIG Nº 4
Y EARTHQUAKE DISPLACEMENTS
DYNAMIC ANALYSIS

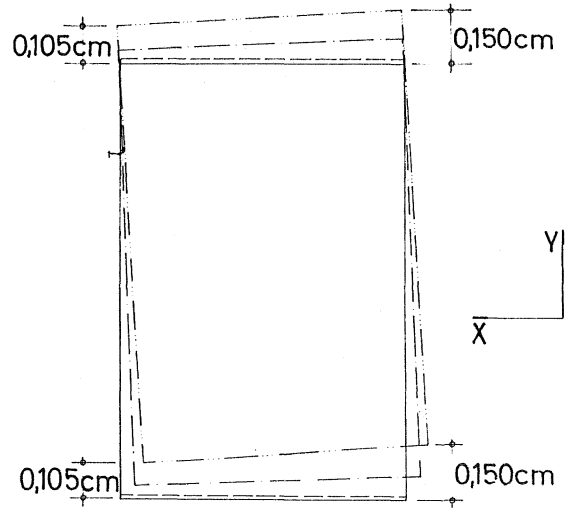

——— INITIAL POSITION
- - - - CEILING PLANT FIRST FLOOR
—·— CEILING PLANT SECOND FLOOR
—··— CEILING PLANT THIRD FLOOR
PLANT SCALE 0 2 4 6 Meters
DISPLACEMENTS SCALE 0 0,3 Centimeters

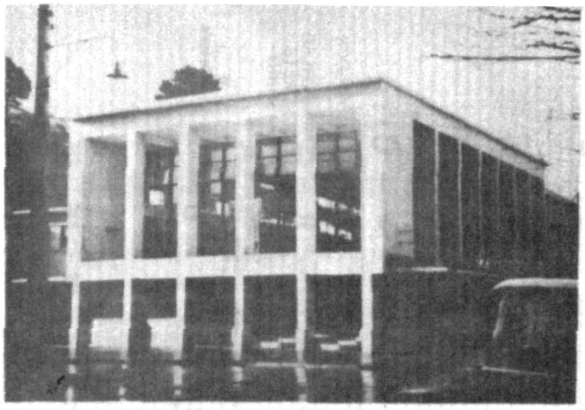

FIG. 5

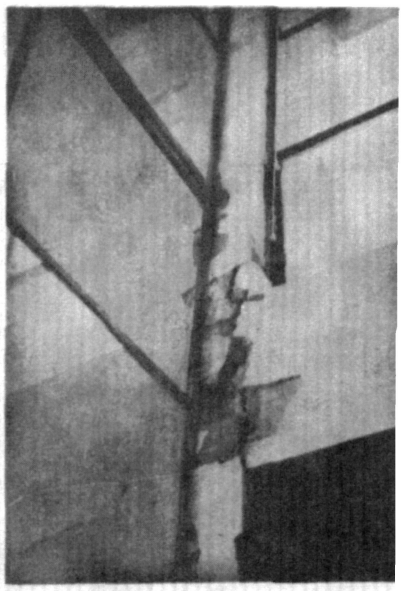

FIG. 8

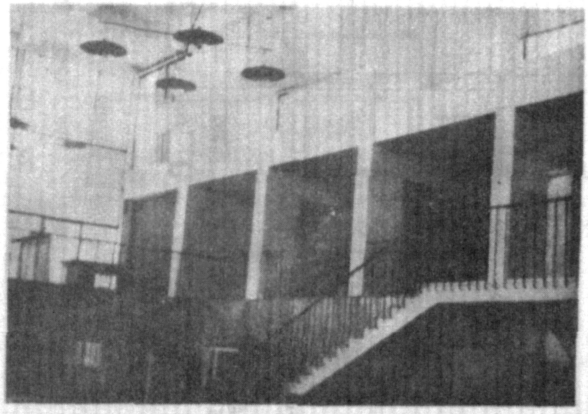

FIG. 6

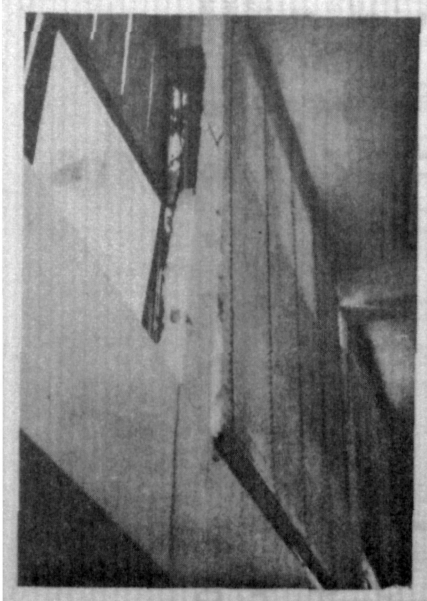

FIG. 7

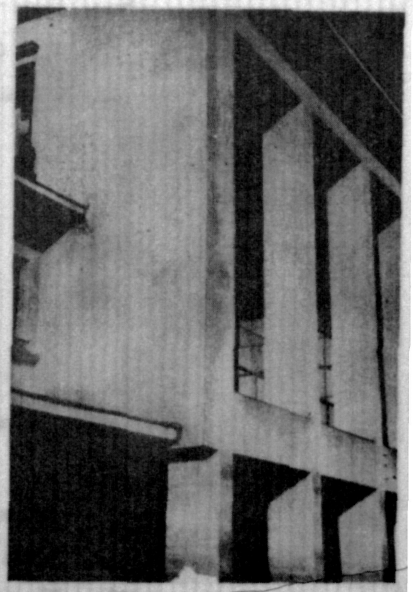

FIG. 9

FIG. 10

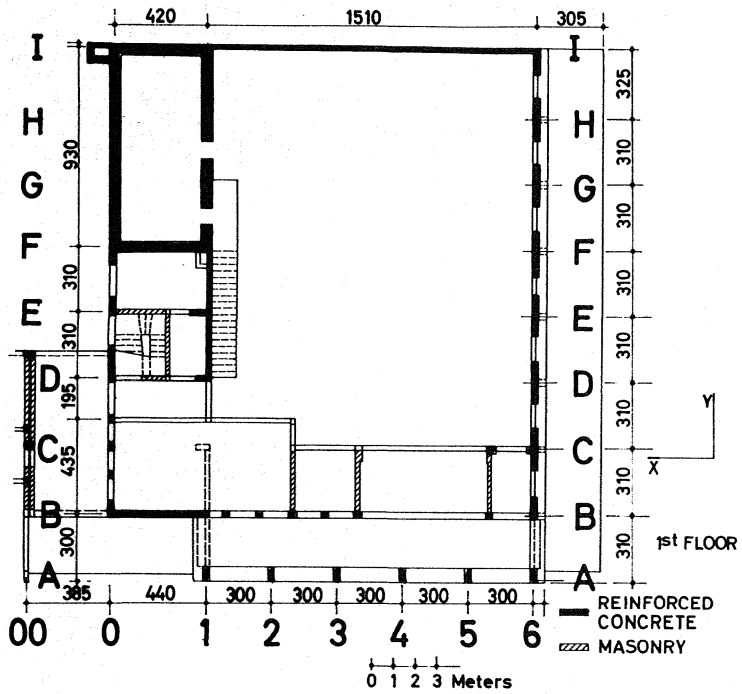
420
1510
305
930
310
310
195
435
300
325
310
310
310
310
310
310
385
440
300
300
300
300
300
I
H
G
F
E
D
C
B
A
00
0
1
2
3
4
5
6
Y
X
1st FLOOR
REINFORCED CONCRETE
MASONRY
0 1 2 3 Meters

FIG. 11

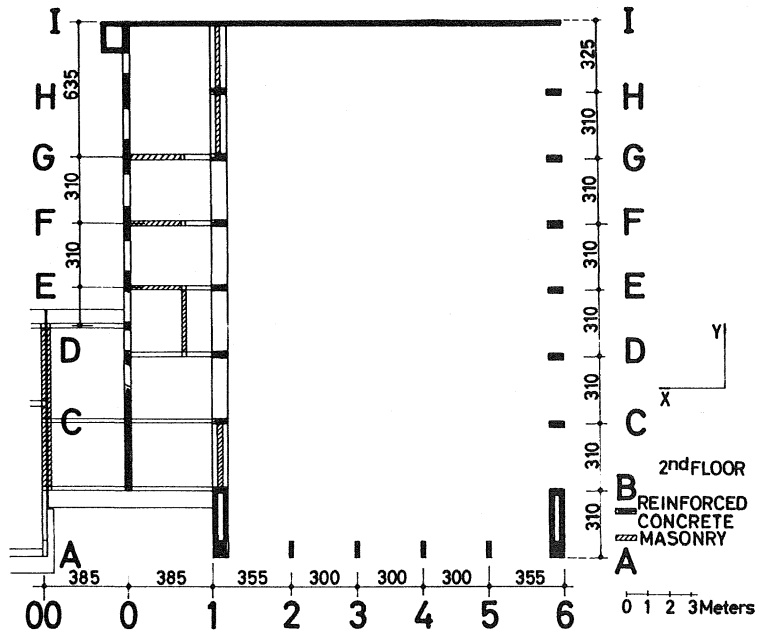
635
310
310
325
310
310
310
310
310
310
310
385
385
355
300
300
300
355
I
H
G
F
E
D
C
B
A
00
0
1
2
3
4
5
6
Y
X
2nd FLOOR
REINFORCED CONCRETE
MASONRY
0 1 2 3 Meters

FIG. 12

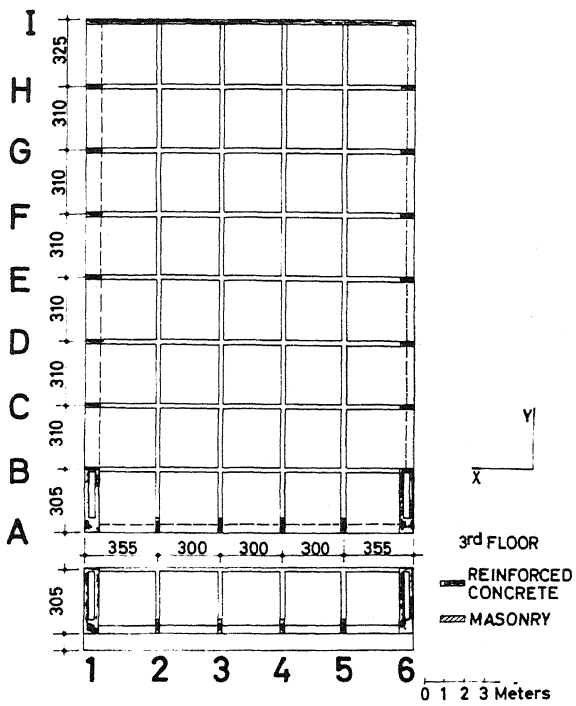

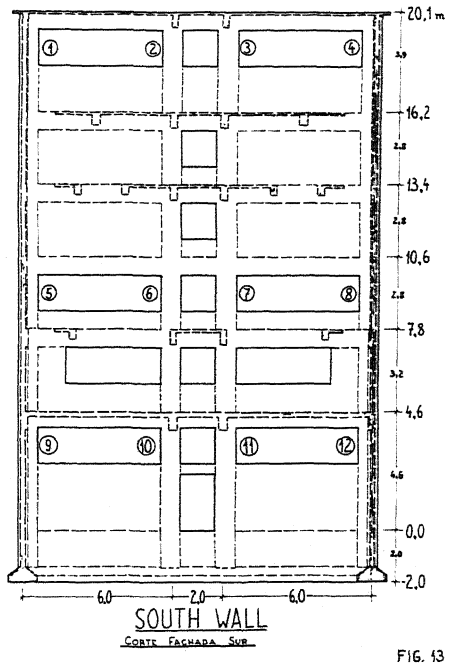

FIG. 13

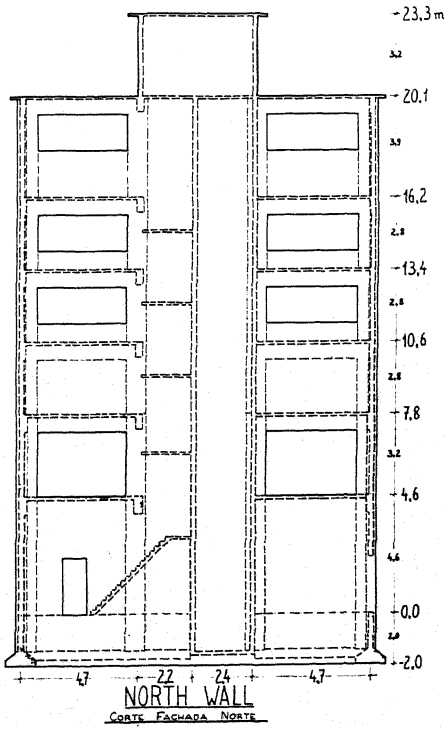

FIG. 14

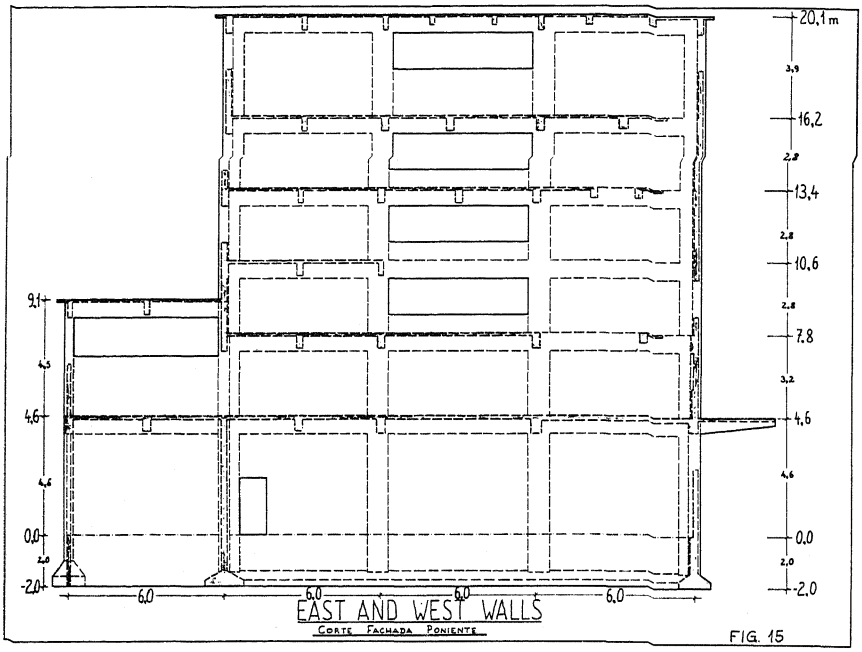
20,1 m
16,2
13,4
10,6
7,8
4,6
0,0
-2,0
9,1
6,0
EAST AND WEST WALLS
CORTE FACHADA PONIENTE

FIG. 15

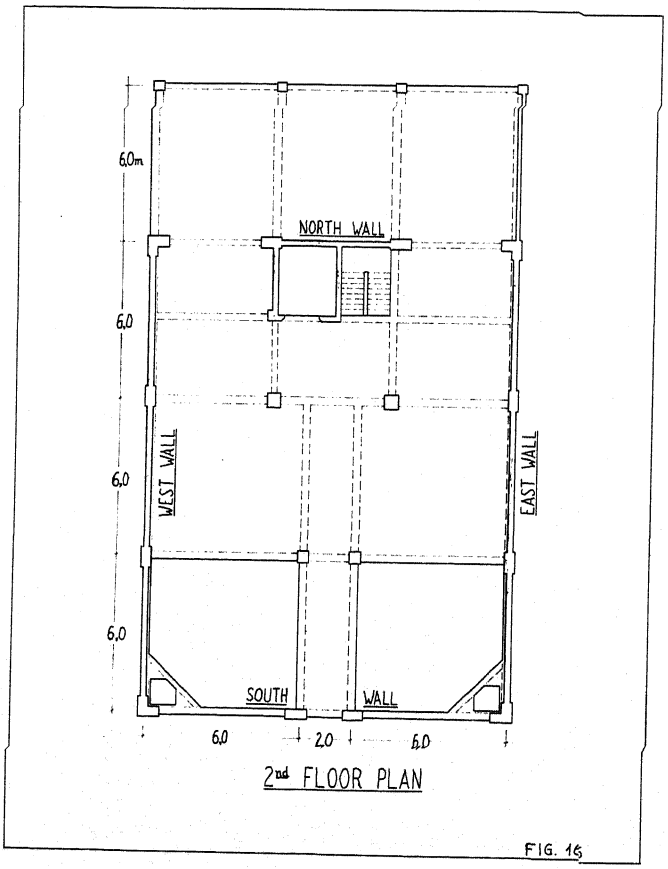
6,0m
NORTH WALL
WEST WALL
EAST WALL
SOUTH WALL
6,0
2,0
2nd FLOOR PLAN

FIG. 16