Proceedings of Ninth World Conference on Earthquake Engineering
August 2-9, 1988, Tokyo-Kyoto, JAPAN (Vol.II)

3-6-9

ANALYSIS OF THEORETICAL SEISMOGRAMS BY THE THIN LAYER FINITE ELEMENT METHOD AND ITS APPLICATION TO THE 1980 IZU-HANTO-TOHO-OKI EARTHQUAKE IN JAPAN

Toshiaki SATOH*, Masayuki HASEGAWA*, Shoichi NAKAI*
Takahide WATANABE* and Teiji TANAKA*

* Ohsaki Research Institute, Shimizu Corporation

SUMMARY

A new method is derived to obtain theoretical seismograms for earth structures considering the layered strata and local soil conditions surrounding an observation station. The reciprocal relationship of Green's functions is employed in the formulation, and the Green's functions are obtained in the frequency domain by combinating of the three-dimensional thin layer element method and the axisymmetric finite element method. The validity of this method is studied through comparison of its results for an elastic halfspace with those by the wavenumber integration method. As a numerical example, the effects of an idealized sedimentary basin surrounding an observatory is calculated. This method is further applied to the analysis of the 1980 Izu-Hanto-Toho-Oki earthquake with M_{JMA} 6.7 in Japan.

INTRODUCTION

Earthquake ground motions have been studied using several theoretical kinematic fault models. The normal mode theory, the generalized rays, the discrete wave number method, the discrete wave number finite element method and the wavenumber integration method are the typical ones (Ref. 1 - 5). These layer-dependent methods are most efficient when the earth structure can be regarded as layered strata. However, some ground motions which are considered to be strongly influenced by local soil conditions have been often observed such as those in Mexico city during the Michoacan earthquake of 1985. The finite element method and finite difference method are the powerful approaches to evaluate the dynamic responses of these arbitrary earth structures (Ref. 6, 7). However, it is necessary to prevent reflecting waves at the artificial boundary within an infinite medium in order to obtain precise solutions. Therefore, these numerical methods suffer from exorbitant computational cost when the source and observer are separated or the duration of ground motions is long.

This paper presents a new method to calculate theoretical seismograms for earth structures considering the layered strata and local soil conditions surrounding an observatory. The reciprocal relationship of Green's functions is employed in the formulation, and the Green's functions are obtained in the frequency domain by combinating of the three-dimensional thin layer element method by Waas (Ref. 8), Kausel (Ref. 9) and Tajimi (Ref. 10) and the axisymmetric finite element method. The results in the time domain are obtained by the FFT algorithm. Therefore, the proposed method is called the thin layer finite element (TLFE) method in this paper. The accuracy of this method is examined by comparing its results with wavenumber integral solutions for a buried point source in an elastic halfspace. As a numerical example, theoretical seismograms on the idealized sedimentary basin model are calculated in order to illustrate the effect of local soil conditions near the observation point. Finally, this method is applied to the analysis of the 1980 Izu-Hanto-Toho-Oki earthquake with M_{JMA} 6.7 in Japan to examine its availability to synthesized seismograms in the period range from 1 to 5 sec.

METHOD OF ANALYSIS

Displacement field by seismic point source For linear-elastic anisotropic media, the reciprocal relationship (Ref. 11) of a Green's function $G_{ip}(x^o:x^s)$ for the source point x^s and the receiver point x^o in the Cartesian coordinate system is represented as

$$G_{ip}(x^o : x^s) = G_{pi}(x^s : x^o). \tag{1}$$

Consider a steady-state problem of time dependence $exp(i\omega t)$ with ω being a circular frequency. Then, the displacement $\mathbf{u}(x^o,\omega)$ at observatory x^o due to a double couple at the seismic source point x^s buried in an elastic halfspace is expressed using Eq. (1) and the symmetry of the moment tensor as

$$\mathbf{u}(x^o, \omega) = \mathbf{M}(x^s, \omega) \cdot \mathbf{E}(x^s : x^o, \omega), \tag{2}$$

where $\mathbf{M}(x^s,\omega)$ is the moment tensor and $\mathbf{E}(x^s:x^o,\omega)$ is the strain tensor at x^s due to the single force at x^o (Ref. 4). The time domain response is calculated by the FFT algorithm. This concept is shown in Fig. 1.

Green's functions The media to be used to calculate the strain tensor $\mathbf{E}(x^s:x^o,\omega)$ are modeled as follows:

① The media are assumed to be axisymmetric linear elastic halfspace surrounding an observatory as shown in Fig. 2.

② The surrounding area ($r \leqq r_0$) of the observatory are discretized by axisymmetric finite elements and its exterior layered strata are modeled by thin layer elements by Tajimi et al.(Ref. 10).

③ In the three-dimensional thin layer element, the linearlity is assumed for the displacement distribution in depth such as in the finite element formulation, while the displacement function with respect to the horizontal directioin are obtained as the exact solutions for the equation of motion in a homogeneous media.

④ The source point is located in the mid depth of a thin layer element.

⑤ In order to express the infinity of the media, the viscous boundaries are introduced on the bottom surface of both the finite element and thin layer element regions as done by Hasegawa et.al. (Ref. 12).

⑥ The effects of attenuating media are introduced as a frequency-independent Q value using complex Lame's constants.

The three-dimensional thin layer element method is suitable to account for the horizontal infinity of wave fields in layered media and the axisymmetric finite element method is appropriate to represent complicated media. Hence the TLFE method can accommodate both arbitrary layered strata and axisymmetric local soil conditions around the observatory with the aid of the reciprocal relationship of Green's functions as shown in Figs. 1 and 2.

The procedure to obtain strain tensor $\mathbf{E}(x^s:x^o,\omega)$ within the thin layer element is as follows:

(a) The displacement distribution $\mathbf{u}(r_0)$ at the boundary ($r=r_0$) between the finite element region and the thin layer element region are obtained for the harmonic loading at the observation point x^o located at the cylindrical axis in the finite element region.

(b) The displacement distribution $\mathbf{u}(r)$ at radius r within the thin layer element region can be given by the mode superposition as

$$\mathbf{u}(r) = \mathbf{J}(r) \cdot \mathbf{q}, \tag{3}$$

where $\mathbf{J}(r)$ is a modal matrix including the Hankel functions depending on radius r, $\mathbf{q}$ is a generalized displacement vector independent of r. Therefore, substituting $\mathbf{u}(r_0)$ into Eq. (3), $\mathbf{q}$ can be solved as

$$\mathbf{q} = \mathbf{J}(r_0)^{-1} \cdot \mathbf{u}(r_0). \tag{4}$$

(c) The displacement distribution $\mathbf{u}(R)$ at the seismic source point with radius R is calculated by substituting Eq. (4) and $r = R$ into Eq. (3).

(d) The strain tensor $\mathbf{E}(x^s:x^o,\omega)$ in Eq. (2) are given by differentiating $\mathbf{u}(R)$ analytically in the r-direction and numericallyin the z-direction.

Propagating fault In order to consider a propagating fault, the fault plane is divided into rectangular subfaults. Each subfault is represented by a point source located in the center of it. The total theoretical displacements are obtained by superposing the generated displacements from each subfault considering the time lag due to the rupture propagation.

VERIFICATION OF ACCURACY

We examine the appropriate depth of the bottom boundary with viscous dashpots to obtain theoretical seismograms precisely for an uniform halfspace, which has the most rigorous condition to the infinity of the media. As a result, it becomes clear that we have to set up the depth of the bottom boundary so that the following conditions be satisfied: (i) The incidence angle η of body waves into the bottom boundary should be less than about 45° as shown in Fig. 3 (a); (ii) For Rayleigh wave mode shapes of the maximum wavelength of interest, the amplitude at the bottom boundary should be less than about 1/5 of the maximum amplitude at the surface as illustrated in Fig.3 (b).

The layered structure in Fig. 4 is used to compare the TLFE solutions with the wavenumber integration solutions by Apsel and Luco (Ref. 5) resulting from the action of a buried double couple source. The source corresponds to a vertical strike-slip dislocation and the source time-dependence is represented by a ramp of 1 sec duration. The earth structure is modeled up to the depth of 20 km for the TLFE model. The displacement is filtered in the frequency range from 0.05 to 0.5 Hz. The three components of displacement at 15 km epicentral distance are shown in Fig. 5. The TLFE solutions agree quite well with the wavenumber integratal ones. Hence the accuracy of the TLFE solutions is validated for layered strata.

THEORETICAL SEISMOGRAMS ON AN IDEALIZED SEDIMENTARY BASIN STRUCTURE

The effects of a sedimentary basin surrounding an observatory is calculated by the TLFE method. Figure 6 shows the geometry to be considered. The radius of the sedimentary basin is 30 km and its depth is 3 km. The earth structure is modeled up to the depth of 50 km. The displacement is band-pass filtered in the frequency range from 0.05 to 0.4 Hz. From the comparison of the theoretical seismograms by the models without sedimentary basin as shown in Fig. 7, it is found that the peak values of ground motion are amplified and its duration is increased due to existence of the sedimentary basin.

APPLICATION TO THE 1980 IZU-HANTO-TOHO-OKI EARTHQUAKE

Data The 1980 Izu-Hanto-Toho-OKi earthquake (M_{JMA} 6.7) occurred on 19 June, 1980, off the east coast of the Izu Peninsula, Japan. Figure 8 shows the location of the fault of this earthquake and the observation stations used in this study. We used near-field seismograms at Kawana, Ajiro and Nebukawa stations on the hard soil (Ref. 13). The recorded accelerograms are transformed into displacements by integrating in the frequency domain in order to compare those with synthetic displacements.

Structure and fault models The detailed layered velocity structure, as listed in Table 1, is assumed based on the results of explosion seismic experiments (Refs. 14, 15). This earth structure is modeled up to the depth of 31 km so that the Moho is included. The various models with different fault parameters were assumed in previous studies (Refs. 16-19). In this study, the fault parameters, as shown in Fig 8, are assumed based on the aftershock distribution by Matsu'ura (Ref. 20) and those commonly used in the previous investigations. In computing the synthetic seismograms, the simple model with constant rupture velocity is assumed and the fault plane is divided into 20 subfaults as shown in Fig. 9.

Synthetic seismograms In order to fit the waveforms of synthetic seismograms to those of observed ones, the strike direction and dip angle of the fault have been changed. The synthetic and observed seismograms are band-pass filtered in the range from 0.2 to 1.0 Hz. The synthetic seismograms for the strike of N5°W and the dip angle of 75°, which is one of the best fitted combinations, are compared with the observed seismograms in Fig. 10. The main parts of the waveforms agree well each other. The observed seismogram of the NS-component at Kawana station is excellently reproduced in the synthesis. We have estimated that the seismic moment M_0 is about 3.8×10^{25} dyne-cm when the peak value of the NS-component at Kawana station is well simulated. This M_0 value is smaller than that of 5.0 - 7.2×10^{25} dyne-cm used in the previous studies. This reason may be explained by the fact that the seismic moment in this study is determined for the higher frequency range than those in the previous studies. The coda parts of the waveforms cannot be simulated well. This fact suggests that the rupture process of this earthquake might be complicated (Refs. 18, 19).

CONCLUSIONS

The principal results in this study are summarized as follows:

(a) A new method to calculate three-dimensional dynamic response of an elastic halfspace to arbitrary buried seismic sources is proposed. In this method, Green's functions for the kinematic seismic source model are calculated in the frequency domain by combining the three-dimensional thin layer element method with the axisymmetric finite element method. Therefore, the proposed method is called the thin layer finite element (TLFE) method in this paper. By using the reciprocal relationship of Green's functions, this method can calculate theoretical seismograms of earth structures considering the layered strata and local soil conditions surrounding an observation station.

(b) The condition for the depth of the bottom boundary with viscous dashpots to obtain theoretical seismograms precisely is given for an uniform halfspace The accuracy of the TLFE solutions is validated for layered strata through comparison of the theoretical seismograms with those obtained by the wavenumber integration.

(c) The effects of a sedimentary basin surrounding an observation point are found to be very improtant from the view point of the amplitude and duration of ground motion.

(d) The main parts of the waveforms of observed seismograms at near-field of the 1980 Izu-Hanto-Toho-Oki earthquake with a moderate magnitude (M_{JMA} 6.7) are simulated by this method. The realistic layered structure and the simple fault model with constant rupture velocity are employed in the frequency range from 0.2 to 1.0 Hz. However, the coda parts of the waveforms cannot be simulated well. This fact suggests that the rupture process of this earthquake might be complicated.

ACKNOWLEDGMENTS

The authors wish to express their gratitude to Dr. K. Kudo, Ms. S. Yoshisawa and the other members of the Earthquake Research Institute of Univ. of Tokyo, for many valuable comments and for their permission of the usage of the records. We also thank Mr. H. Kawase of Ohsaki Research Institute, Shimizu Corporation, for his helpful advice. The Green's functions for layered halfspace by the wavenumber integration is owing to the program developed by Prof. Luco, Univ. of California, San Diego.

REFERENCES

1. Harkrider, D. G., "Surface waves in multilayered elastic media. Part I. Rayleigh and Love waves from buried sources in a multilayered elastic half-space," B. S. S. A., 54, 627-679, (1964).
2. Helmberger, D. V., "Generalized ray theory for shear dislocation," B. S. S. A., 68, 45-64, (1974).
3. Bouchon, M., "Predictability of ground displacement and velocity near a earthquake fault : An example: The Parkfield earthquake of 1966," J. G. R., 84, 6149-6156, (1979).
4. Olson, A. H., J. A. Orcutt and G. A. Frazier, "The discrete wavenumber/finite element method for synthetic seismograms," Geophy. J. R. astr. Soc., 77, 421-460, (1984).
5. Apsel, R. and J. E. Luco, "On the green's functions for a layered half-space," B. S. S. A., 73, 931-951, (1983).
6. Day, S. M., "Finite element analysis of seismic scattering problems," Ph. D. Thesis, Univ. of California, San Diego, (1977).
7. Yuan, Y., S. Yoshisawa and Y. Osawa, "Strong ground motion simulation of the 1976 Ninghe, China earthquake," Bull. Earthq. Res. Inst., Univ. Tokyo, 61, 97-127, (1986).
8. Waas, G., "Analysis method for footing vibrations through layered media," Technical Report S-71-14, Earth Vibration Effects and Abatement for Military Facilities, Report 3, (1972).
9. Kausel, E., J. M. Roësset and G. Waas, "Dynamic analysis of footings on layered media," J. Eng. Mech. Div., ASCE, EM5, 101, 679-693, (1975).
10. Tajimi, H. and Y. Shimomura, "Dynamic analysis of soil-structure interaction by the thin layer element method (in Japanese)," Trans. Arch. Inst. Japan, 243, 41-51, (1976).
11. Burridge, R. and L. Knopoff, "Body force equivalent for seismic dislocations," B. S. S. A., 54, 1811-1841, (1964).
12. Hasegawa, M., S. Nakai, N. Fukuwa and T. Tamura, "Dynamic analysis of a structure embeded in a multilayered medium by the boundary element method," Shimizu Tech. Res. Bull., No.4, (1985).
13. Tanaka, T., M. Sakaue, Y. Osawa and S. Yoshizawa, "Strong-motion accelerograms and maximum acceleration data of the Izu-Hanto-Toho-Oki earthquake and swarm earthquakes of 1980 (in Japanese)," Bull, Earthq. Res. Inst., Univ. Tokyo, 55, 1043-1064 , (1980).
14. Asano, S., K. Wada, T. Yoshii, M. Hayakawa, Y. Misawa, T. Moriya, T. Kanazawa, H.Murakami, F. Suzuki, R. Kubota and K. Suyehiro, "Crustal structure in the northern part of the Philippine sea plate as serived from seismic observations of Hatoyama-off Izu peninsula explosions," J. P. E, 33, 173-189, (1985).
15. Yoshii, T, S. Asano, S. Kubota, Y. Sasaki, H. Okada, S. Susuki, T. Masuda, M. Moriya and H. Murakami, "Crustal structure in Izu peninsula, central Japan, as derived from explosion seismic observations 2. Ito-Matsuzaki profile," J. P. E, 33, 435-451, (1985).
16. Irikura, K., "Semi-empirical estimation of strong ground motions during large earthquake," Bull. Disas. Prev. Res. Inst., Kyoto Univ., 33, Part 2, 63-104, (1983).
17. Takenaka, H., "Strong-motion modeling of the 1980 Izu-Hanto-Toho-Oki earthquake by Inversion method," J. Fac. Sci., Hokkaido Univ., 8, No.2, 155-172, (1987).
18. Noda, S., H. Oishi and E. Uematsu, "Estimation of near-source ground motions of the 1980 Izu-Hanto-Toho-Oki earthquake by DWFE method," Proc. of 7th Japan Earthq. Eng. Symp., Tokyo, 115-120, (1986).
19. Takeo, M., "Rupture process of the 1980 Izu-Hanto-Toho-Oki earthquake deduced from strong motion seismograms," B. S. S. A., 78, 1074-1091, (1988).
20. Matsu'ura, R., "Detailed study of the earthquake sequence in 1980 off the east coast of the Izu peninsula, Japan," J. P. E, 31, 65-101, (1983).

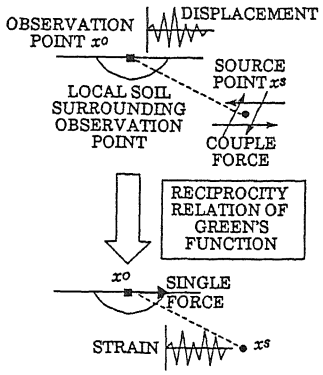

Fig. 1 Displacement due to a double couple using reciprocity relationship of Green's functions

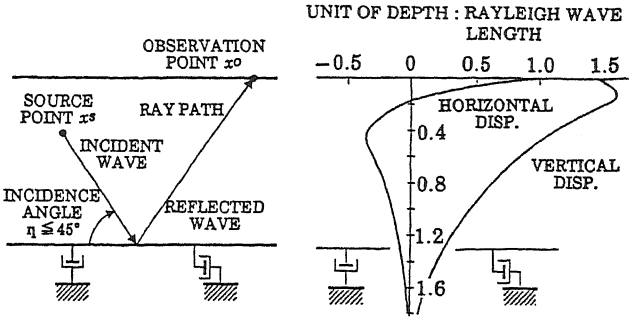

(a) Body wave (b) Rayleigh wave

Fig. 3 Depth of bottom boundary with viscous dashpots in order to obtain precise solutions for uniform halfspace

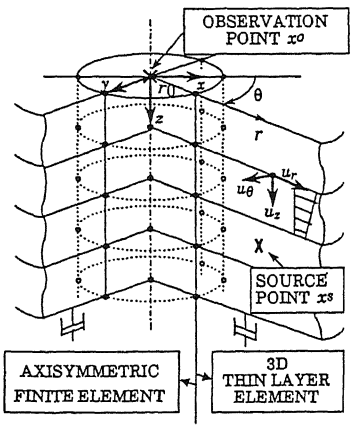

Fig. 2 Modeling of elastic halfspace by TLFE method

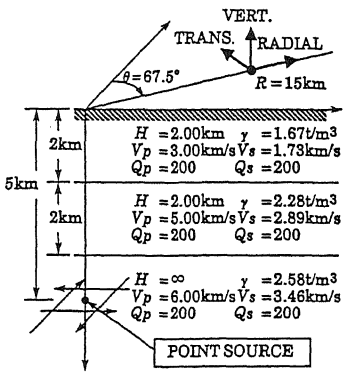

Fig. 4 Source-observer geometry used for comparing TLFE solutions with wavenumber integral solutions for layered halfspace

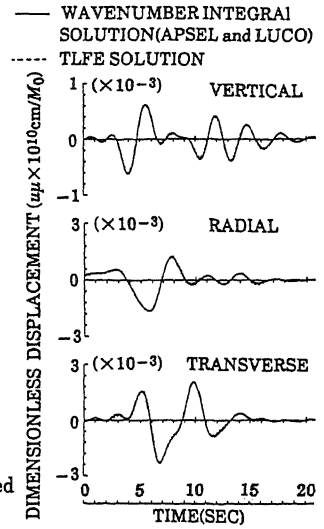

Fig. 5 Comparison of theoretical seismograms between TLFE and wavenumber integral solutions

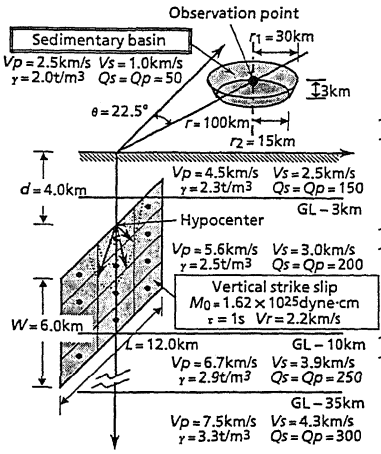

Fig. 6 Source-observer geometry used for studying effects of sedimentary basin

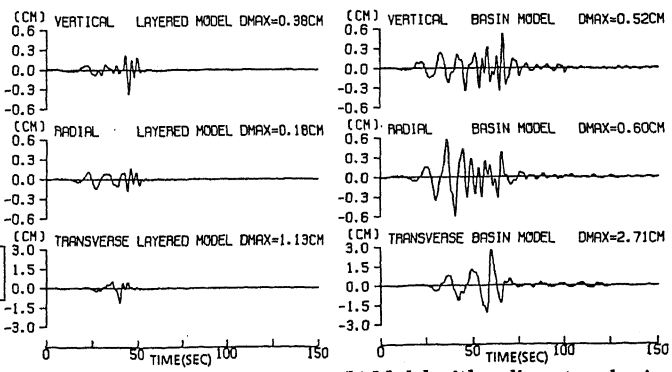

(a) Model without sedimentary basin (b) Model with sedimentary basin

Fig. 7 Comparison of theoretical seismograms between layered models with and without sedimentary basin

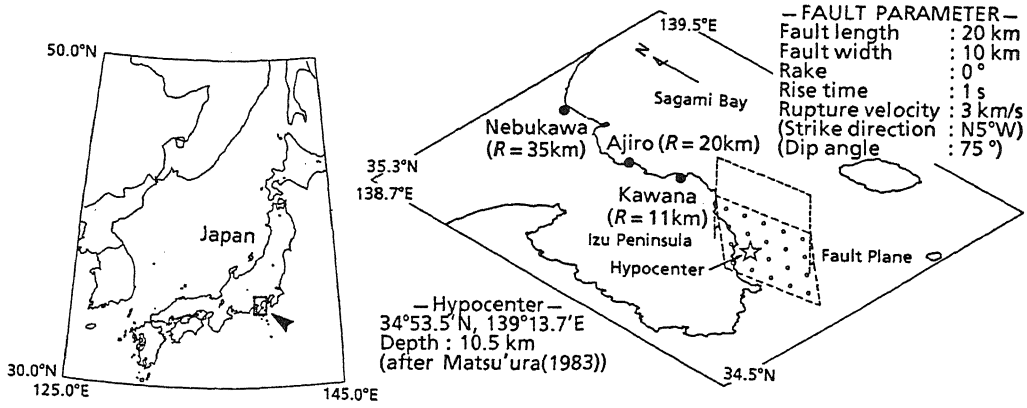

Fig. 8 Location of fault and hypocenter of the 1980 Izu-Hanto-Toho-Oki earthquake with M_{JMA} 6.7 and strong-motion stations used in this study

Table 1 Assumed velocity structure

DEPTH (km)	P-WAVE VELOCITY Vp (km/s)	S-WAVE VELOCITY Vs (km/s)	DENSITY γ (t/m³)	Q VALUE Q
0.0	2.6	1.0	2.0	50
0.5	4.2	1.5	2.3	100
2.0*	5.3	3.0	2.6	200
6.0*	6.1	3.7	2.8	250
19.0	6.8	3.9	3.0	250
30.0	7.8	4.5	3.3	300

* Between two succesive depths marked by asterisk, velocity, density and Q valule have linear gradient.

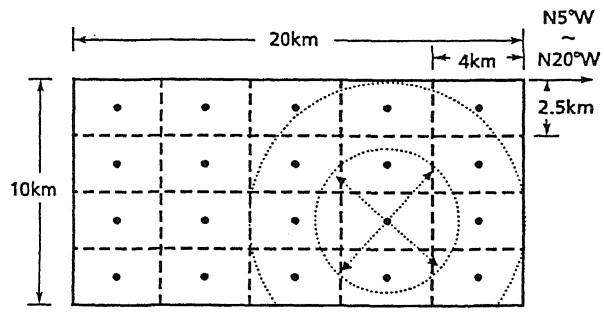

Fig. 9 Fault plane model discretized by point sources

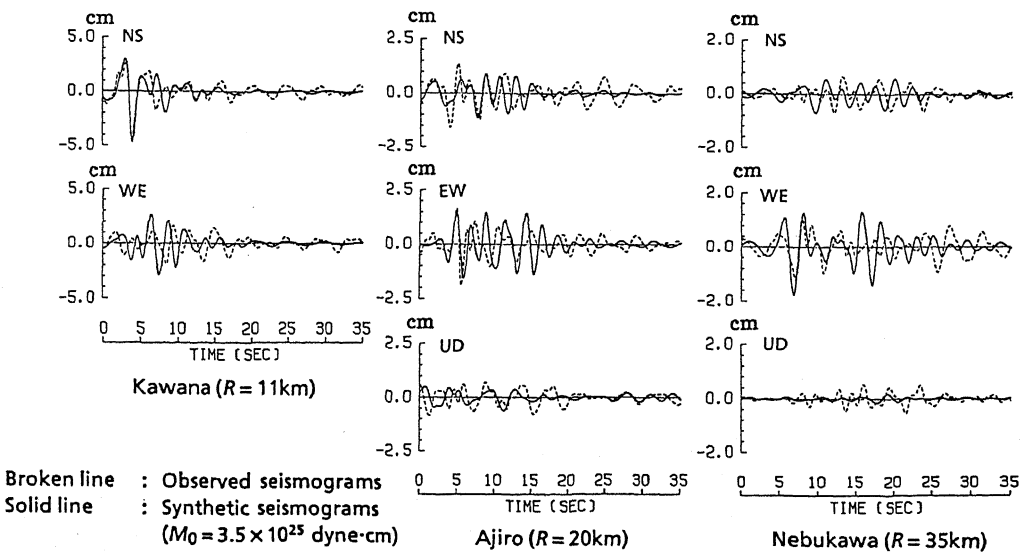

Fig. 10 Comparison between observed displacements and synthetic ones calculated using strike of N5°W and dip angle of 75° in the frequency range from 0.2 to 1.0 Hz of the 1980 Izu-Hanto-Toho-Oki earthquake