STRENGTH AND BEHAVIOR OF POSTCAST SHEAR WALLS FOR STRENGTHENING OF EXISTING REINFORCED CONCRETE BUILDINGS

Hiroyuki Aoyama (I)
Daisuke Kato (II)
Hideo Katsumata (III)
Youji Hosokawa (IV)
Presenting Author : H. Aoyama

SUMMARY

Reinforced concrete shear walls, postcast into an existing frame for seismic strengthening, were studied experimentally. When the confining effect around a wall from the surrounding frame was increased, the shear strength of both monolithic and postcast walls was increased. The shear strength of postcast walls was, in general, lower than that of monolithic walls of the same proportion, but the deformation capability of postcast walls was superior. The improvement in postcasting construction methods resulted in increase in strength and decrease in deformation capacity. Design shear strength of postcast walls with high confining effect may be increased. Evaluation of effect of openings in the current design method seems adequate.

INTRODUCTION

Evaluation of earthquake-resisting capacity of existing reinforced concrete buildings in Japan (Ref. 1) revealed that a considerable number of existing buildings needed strengthening of certain extent. Among a variety of strengthening methods, the most favored method is to add shear walls "postcast" into existing frames. From tests of postcast shear walls (Refs. 2,3), an empirical design equation for shear strength was developed in the Guideline for Repair and Strengthening Design of Existing Reinforced Concrete Buildings (Ref. 4); the shear strength of postcast shear walls was evaluated as 0.80 times that of corresponding monolithic shear walls, expressed by Arakawa's equation (Ref. 1). Shear walls were usually postcast continuously over the height of the building, and they are frequently placed in the several consecutive spans. Windows are generally installed in the shear walls.

Looking into such practical applications, several problems became apparent. Most available test data are on single-story, single-span specimens. Wall panels surrounding a cracked panel would give some confining effect and might override the strength reduction due to postcasting. Furthermore, the ultimate strength of many specimens was dictated by the flexural yielding even though the walls finally failed in shear, whereas the flexural strength of multi-span walls is usually far greater than their shear strength. The effect of window openings in postcast shear walls is yet to be established. Finally, there are several detailing and construction problems, such as anchoring methods for wall reinforcement and placemnent of postcast concrete.

(I) Professor, Department of Architecture, University of Tokyo, Japan
(II) Graduate Student, Department of Architecture, University of Tokyo
(III) Ohbayashi-gumi, Ltd., Tokyo
(IV) Research Associate, Department of Architecture, University of Tokyo

This paper introduces an experimental study to throw some light into these problems. Twelve specimens, about one third in scale, were tested to investigate : (1) confining effect of adjacent wall panels (2) effect of flexural strength on shear strength, (3) effect of openings, and (4) method of postcasting construction.

OUTLINE OF TESTS

All specimens were single-story single-span walls, but the top girder was intentionally made very stiff and strong in order to simulate the confining effect of multistory shear walls. Variables are shown in Table 1. Specimen marks consist of alphabets and numerals. The numerals denote the size and axial bar area of side columns. The alphabets represent other parameters, such as monolithic or postcast, different methods of wall reinforcement anchoring, and size and location of wall openings.

Confining effect of adjacent wall panels was studied by varying column size (Fig. 1) and reinforcement, while the latter also influenced the flexural to shear strength ratio. Casting of a wall panel and anchoring of wall reinforcement were as follows: prototype monolithic wall specimens (P); specimens (M) with postcast walls using mechanical anchoring; specimens (C) with postcast walls using chemical adhesive anchoring. Two types of chemical anchors were used; regular (C) and high strength (CH). In specimens (CH), expansive concrete was used to overcome setting of the postcast concrete and to prevent a crack at the top of the postcast wall. The effect of an opening were studied in the past on monolithic walls and a design equation has been developed. Tests were carried out to see if the same strength reduction relation might hold for postcast walls (Fig. 2). Figure 3 shows cross section of columns and walls. Table 2 shows strength of concrete, reinforcement and anchor. Note that frame and wall concrete had different strengths in postcast specimens.

A frame of a specimen was first constructed. After 10 days of curing, concrete surface was chiseled to improve bond with postcast concrete, and short splice bars were anchored in the drilled holes in the columns or girders using mechanical devices or chemical adhesive. Wall reinforcement was then placed, and forms were constructed. The concrete was placed through a hopper attached to the form, having a special gate to close at the wall surface.

METHOD OF TESTING

Figure 4 shows the loading set-up. Specimens were subjected to constant vertical load of 24 t, which corresponded to 30 kg/cm**2 normal stress on 20 cm square columns. Horizontal loads were applied at both ends of the girder by pulling and pushing in order to distribute the horizontal shear stress evenly over the entire wall section. Four or five cycles of horizontal loads were applied by displacement control.

Measurement included horizontal displacements, flexural rotation determined from axial deformations of the columns, shear deformation determined from diagonal displacements, slip of the wall panel with respect to the top and bottom girders. Strains in column and wall bars were also measured.

OBSERVED BEHAVIOR OF SPECIMENS

Figure 5 shows final crack patterns and failure modes of the specimens. In the first load cycle at a translation angle of 1/500, flexural cracks at column base and shear cracks in the wall appeared in all specimens. Cracks occurred along splice bars. Walls with an opening suffered extensive shear cracks on both sides of the opening. The loading in the second load cycle was continued until the maximum load was attained at a translation angle of 1/150 to 1/100. At the maximum load, all specimens had extensive shear cracks in the wall. In all specimens without an opening, concrete crushed at the top of the wall and the compressive column. Specimens with weak columns (2005 type) developed extensive flexural cracks at the column base. Walls with an opening were extensively damaged on both sides of the opening and at the top of columns. In the final cycle at translation angle over 1/50, weak-column specimens C2005 and M2005 failed primarily in flexure, with pulling-out of splice bars at the base of the wall. Other specimens without openings failed in shear compression or direct sliding shear. The column on the compression side also failed in shear compression. Walls with an opening failed by direct shear on both sides of the opening, failure extending into adjacent columns.

In all specimens, the shear deformation occupied 50-60 percent of the total horizontal displacement until the maximum load was attained. In the final cycle of the tests of monolithic specimens, the shear deformation became more than 60 percent of the horizontal displacement and the slip between the wall panel and the girders was very small. On the other hand, in the postcast specimens M2005, C2005 and C4015, both flexural and slip deformations dominated, the sum reaching more than 80 percent of the total horizontal displacement. In specimen C2015, the slip deformation dominated. In specimen CH2015 and specimens with openings, the shear deformation became dominant, similar to the monolithic specimens, as the result of the use of expansive concrete at the top of the postcast wall panel.

OBSERVED MAXIMUM STRENGTH

Table 3 summarizes the observed maximum loads, and their ratios among them. Typical load-displacement relations are shown in Fig. 6, with calculated maximum loads corresponding to various failure modes.

The effect of confinement of a wall panel by the surrounding frame can be observed by looking at columns (a) and (b) in Table 3. For both postcast and monolithic wall, the shear strength inceased by 40-60 percent when the confining effect was increased by increasing the flexural strength or the stiffness of the side columns or both. The confining effect in specimens C4015 and CH2018 was observed to be lower because the two specimens failed in sliding along the interface between the girder and the wall panel.

From columns (a), (b) and (c) in Table 3, the shear strength of postcast walls was observed to be 75-85 percent of that of the corresponding monolithic walls. However, the deformation capability of the postcast walls failing in flexure or sliding between old and new concrete was by far greater than the monolithic specimens (Fig. 6.b). The resistance of specimens failing in shear at a translational angle of 1/50 was only 40-70 percent of the maximum resistance.

The shear strength of specimen C2005 using chemical anchors was higher than that of specimen M2005 using mechanical anchors, which were observed weak particularly in tension. The shear strength of specimen CH2015, with high strength chemical anchors and expansive concrete, was comparable to that of specimen C2015 with reguler strength chemical anchors, although the concrete strength in the wall of specimen CH2015 was much lower than that of specimen C2015. Furthermore, the shear resistance of specimen CH2015 at a translational angle of 1/150 was by 20 percent higher than that of specimen C2015. From the standpoint that postcast shear walls are normally used to improve the strength, rather than deformability, of non-ductile existing structures, the use of high strength chemical anchors for splicing bars in conjunction with expansive concrete at the top of the postcast wall is recommended.

If an opening exists in the postcast wall, the shear strength could be reduced by the area ratio of the opening to the wall panel. The effect of the location of the opening was found small.

EVALUATION OF MAXIMUM RESISTANCE

The horizontal load Qmu at the development of the flexural strength of the wall and side columns was calculated using the three equations below;

$$Qmu = (At\ fy + 0.5\ N\ l)/h \qquad (1)$$

$$Qmu = Eq.(1) + 0.5\ Aa\ fa\ l/h \qquad (2)$$

$$Qmu = Eq.(1) + 0.5\ Aw\ fwy\ l/h \qquad (3)$$

where At, Aa, and Aw are the areas of the column longitudinal reinforcement, the vertical splicing bars at the base and the vertical wall reinforcement, respectively; fy, fa and fwy are the yield strengths of respective reinforcement; N is the axial force; l and h are the width and height of the specimen. The resistance from splicing bars is ignored in Eq. (1) and the contribution from splicing bars using the pull-out strength fa obtained from tests are added in Eq. (2). These two equations were applied to the postcast walls, and Eq. (3) was used for the monolithic walls. The shear strength Qsu and the sliding strength between old and new concrete Qpc were calculated by the empirical design equations, as suggested in the Guideline (Ref. 1):

$$Qsu = (1-r)\left(\left(\frac{0.053\ Pte^{0.23}(Fc+180)}{\sqrt{M/Ql\ +\ 0.12}} + 2.7\sqrt{Pwe\ fwy}\right) be\ l + N/10\right) \qquad (4)$$

where, r=square root of elevation area ratio of opening to wall panel; Pte=effective tensile reinforcement ratio in percent; Fc=concrete strength (kg/cm**2); Pwe=web reinforcement ratio of wall; be=effective wall thickness; l=distance between centers of side columns; M/Ql=shear span to width ratio.

$$Qpc = 0.8\ Qsu \qquad (5)$$

$$Qpc = (1-r)\ Qsu' + 2\ a\ Qc \qquad (6)$$

where, Qsu'=(0.05 Fc + Pwe fwy / 2) tw l' ; tw=wall thickness; l'=width of wall panel; a=1.0 for shear failure and 0.7 for flexural failure; Qc=column shear stregth by Eq. (4).

The calculated strengths are compared with the observed strengths in Table 4. Calculated flexural strength by Eq. (2) of the postcast walls failing in flexure (C2005 and M2005) was by 10-20 percent higher than the observed strength. However, when the displacement became larger and the splice bars were pulled out successively from the extreme tensile edge, the observed resistance decreased gradually to the level calculated by Eq. (1). The calculated shear strengths were lower than the observed maximum load in all specimens. Furthermore, the calculated sliding strengths were only half as much as the observed maximum load. These equations are inadequate to evaluate the strength especially in case of the postcast walls.

CONCLUSIONS

From the test results, following conclusions may be drawn:

1) Shear strength increases with the confining effect for both postcast and monolithic shear walls. The confining effect in the form of increased flexural strength was more effective than that in the form of increased stiffness of the side columns.

2) The shear strength of postcast shear walls was less than that of the corresponding monolithic shear walls. However, the increase in confining effect could override the disadvantage of postcasting.

3) Postcast shear walls may fail in sliding along the interface of the old and new concrete, however, with a large deformability. The improvement in construction methods reduced the amount of sliding, and increased the strength accompanied by brittleness.

4) Behavior of chemical anchors was generally satisfactory, and it was superior to the mechanical anchors paticularly in tension.

5) The shear strength of postcast walls with openings could be evaluated in a manner similar to the case of the monolithic shear walls.

AKNOWLEDGMENT

This study was conducted as a part of research project of SPRC Committee of Japan Building Disaster Prevention Association (chaired by Dr. H. Umemura), sponsored by Shizuoka Prefectural Government. Chemical anchors were provided by Japan Decoluxe Co. Ltd. Expansive concrete was mixed and placed under the direction of Dr. T. Hattori of Taisei Construction Research Institute. Assistance was given by Professor S. Otani and others, University of Tokyo. Authors express their deepest appreciation to the cooperation.

REFERENCES

(1) Japan Building Disaster Prevention Association, "Guideline for Evaluation of Earthguake-Resisting Capacity of Existing Reinforcement Concrete Buildings", 1977 (in Japanese).

(2) Higashi, Y. and Kokusho, S., "The Strengthening Method Existing Reinforced Concrete Building", US-Japan Cooperative Research Program in Earthquake Engeneering, Honolulu, Hawaii, 1975.

(3) Sugano,s. and Fujimura, M., "Aseismic Strengthening of Existing Reinforced Concrete Building", 7WCEE, Istanbul, Turkey, 1980.

(4) Japan Building Disaster Prevention Association, "Guideline for Repair and Strengthening Design of Existing Reinforced Concrete Buildings", 1977 (in Japanese).

Table 1 Parameter and Specimen List

Specimen	Boundary Column bxD (cm)	Ag (cm)	Concrete and Anchor of Wall Panell	Peripheral Ratio, and Location
P2005	20x20	5.08	Monolithic	No Opening
P2015	20x20	15.24	Monolithic	No Opening
P4015	20x40	15.24	Monolithic	No Opening
C2005	20x20	5.08	Regular, Chem	No Opening
M2005	20x20	5.08	Regular, Mech	No Opening
C2015	20x20	15.24	Regular, Chem	No Opening
C4015	20x40	15.24	Regular, Chem	No Opening
CH2015	20x20	15.24	Expansive, C.H	No Opening
CH2018	20x20	18.12	Expansive, C.H	No Opening
OLC2015	20x20	15.24	Expansive, C.H	0.33, Center
OLU2015	20x20	15.24	Expansive, C.H	0.33, Upper
OSC2015	20x20	15.24	Expansive, C.H	0.25, Center

bxD : Column Width and Depth
Ag : Gross Area of Column Main Bars
Chem : Chemical Anchor for Regular Use
C. H : Chemical Anchor with High Strength
Mech : Mechanical Anchor
P : Area Ratio of Opening to Wall Panel

Table 2 Properties of Materials

Specimen	Concrete Fc (kg/cm) Frame	Wall	Reinforcement-Bar fy (t/cm) D6	D10	D13	D16	Anchor fa (t/cm)
P2005	287	287	3.99	3.53	3.68	-	-
P2015	297	297	3.62	3.53	3.68	-	-
P4015	297	297	3.62	3.53	3.68	-	-
C2005	301	287	3.99	3.53	3.68	-	2.98
M2005	301	287	3.99	3.53	3.68	-	2.04
C2015	234	297	3.62	3.53	3.68	-	2.98
C4015	234	297	3.62	3.53	3.68	-	2.98
CH2015	289	222	3.96	3.88	3.84	-	3.45
CH2018	261	222	3.96	3.88	3.84	3.50	3.45
OLC2015	227	181	3.96	3.88	3.84	-	3.45
OLU2015	223	181	3.96	3.88	3.84	-	3.45
OSC2015	264	181	3.96	3.88	3.84	-	3.45

Fc : Compressive Strength
fy : Yield Strength
fa : Pull-Out Strength

Table 3 Maximum Load and Ratio

Specimen	Max. Load (ton)	Max. Load Ratio a	b	c	d	e
P2005	102	1.00	-	-	-	-
P2015	141	1.38	1.00	-	-	-
P4015	165	1.62	1.17	1.00	-	-
C2005	87	0.85	-	-	1.00	-
M2005	77	0.75	-	-	0.89	-
C2015	120	1.18	0.85	-	1.38	1.00
C4015	126	1.24	-	0.76	1.45	1.05
CH2015	122	1.20	0.87	-	1.40	1.02
CH2018	119	1.17	0.84	-	1.37	0.99
OLC2015	79	-	0.56	-	-	0.66
OLU2015	78	-	0.55	-	-	0.65
OSC2015	86	-	0.61	-	-	0.72

Table 4 Observed and Calculated Maximum Strength

Specimen	Observed (ton)	Flexural Strength Eqn(1) (ton)	Eqn(2) (ton)	Eqn(3) (ton)	Shear Strength Monolithic Wall (ton)	Postcast Wall (ton)
P2005	102	-	-	109 (1.07)	72 (0.71)	-
P2015	141	-	-	172 (1.22)	82 (0.58)	-
P4015	165	-	-	168 (1.02)	87 (0.53)	-
C2005	87	56 (0.64)	100 (1.15)	-	72 (0.83)	45 (0.52)
M2005	77	56 (0.73)	86 (1.12)	-	72 (0.94)	38 (0.49)
C2015	120	124 (1.03)	168 (1.40)	-	82 (0.68)	48 (0.40)
C4015	126	124 (0.98)	164 (1.30)	-	87 (0.69)	56 (0.44)
CH2015	122	128 (1.05)	180 (1.48)	-	76 (0.62)	54 (0.44)
CH2018	119	143 (1.20)	195 (1.64)	-	84 (0.71)	57 (0.48)
OLC2015	79	128 (1.62)	-	-	48 (0.61)	39 (0.49)
OLU2015	78	128 (1.64)	-	-	48 (0.62)	39 (0.50)
OSC2015	86	128 (1.49)	-	-	54 (0.63)	43 (0.50)

(Calculated/Observed)

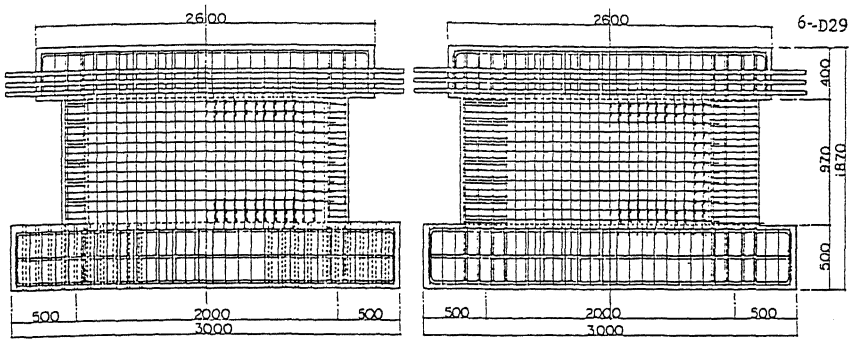

(a) 2005 type (b) 4015 type Unit : (mm)

Fig. 1 Reinforcement of Test Specimens

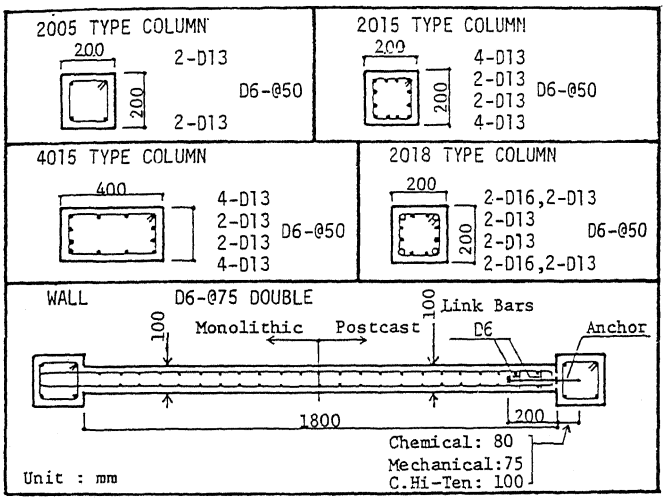

Fig. 3 Cross Section of Columns and Walls

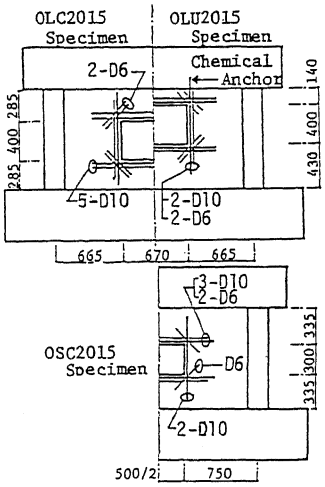

Fig. 2 Details of Peripheral Reinforcement

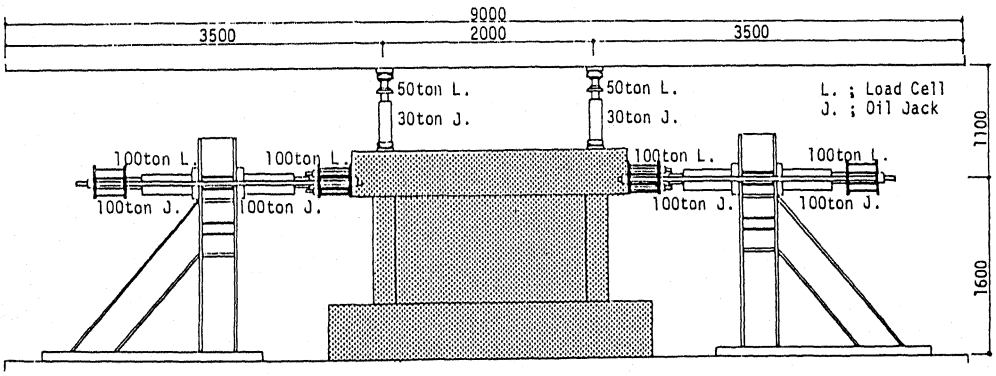

Fig. 4 Loading Set-Up

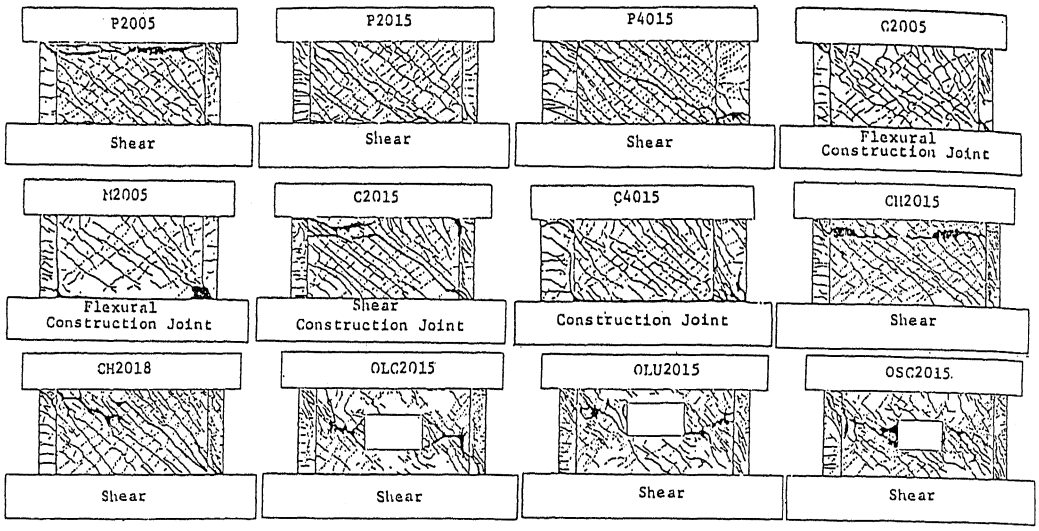

Fig. 5 Crack Patterns

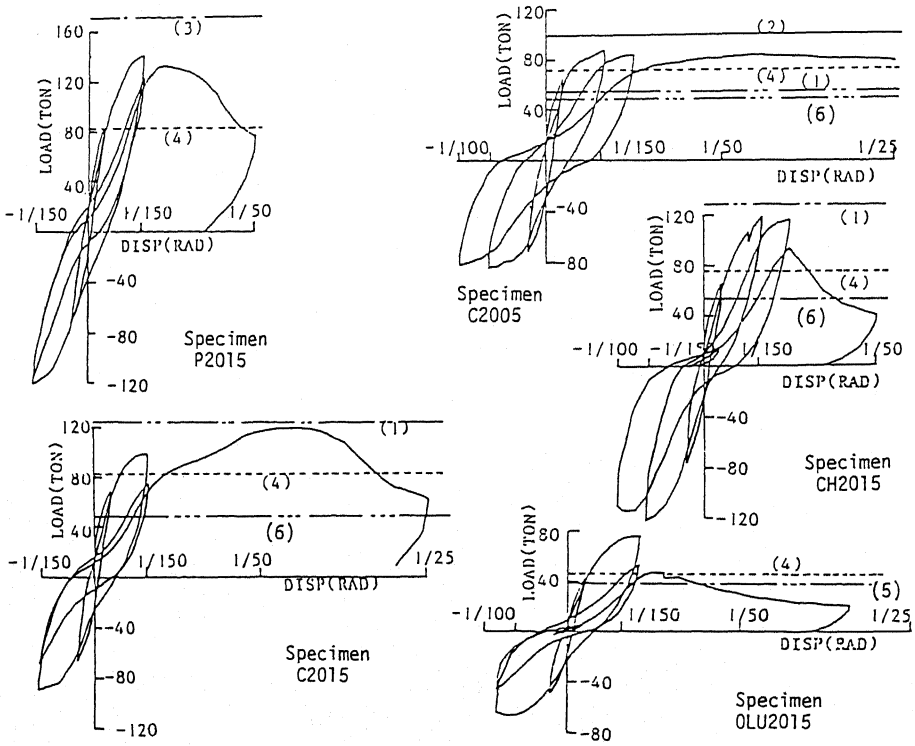

Fig. 6 Load-Displacement Relations of Test Specimens