ENERGY ABSORPTION DEVICES FOR EARTHQUAKE RESISTANT STRUCTURES

R. Ivan Skinner (I), James M. Kelly (II), Arnold J. Heine (I)

SYNOPSIS

Some earthquake resistant structures may be improved by using different components for two functions: withstanding loads, and absorbing vibrational energy. Each type of component can then be optimized for its function. Several types of energy absorber, based on the plastic deformation of mild steel, are under development. Computations show that the installation of energy absorbers increases greatly the earthquake resistance of several classes of structure, including those which rock sideways with a stepping action. Further development of the energy absorbers and studies of applications should lead to their use in a wide range of structures and structural components.

1. INTRODUCTION

There are some deficiencies in current techniques used to provide structures with resistance against earthquakes. The role which such absorbers might play may be seen against the broad features of current methods used to provide earthquake resistance.

Earthquake ground accelerations attack a structure with oscillatory inertia forces, the severity depending on the dynamic character of the structure, and on the amplitude, character, and duration of the ground accelerations. For large structures there is usually a resonant build-up of movements and forces over several cycles of vibration. Economy of design is achieved by allowing the structure to deform well into the inelastic range during severe earthquakes. The three major consequences of inelastic deformation are; redistribution of deformations and forces, increased flexibility and natural periods, and hysteretic absorption of oscillatory energy.

The redistribution of deformations and forces depends on the nature of the structure and the positions of the plastic hinges. When hinges form in the beams of a building frame they spread over several storeys, but column hinges are often limited to the first storey level. There are large first-storey deformations and a large amount of energy absorption occurs in each hinge. The combination of severe inelastic deformations and the vertical loads, leads to rapid deterioration.

I Engineering Seismology Section, Physics and Engineering Laboratory, D.S.I.R., Lower Hutt, New Zealand.

II On leave, between August 1971 and August 1972, from Division of Structural Engineering, University of California, Berkeley, California.

The tower and frame of a composite building are badly matched, with the tower taking most of the base shear. If the base of the tower fails in shear it absorbs little energy and subjects the first storey columns to severe lateral deformations. However formation of a hinge at the base of a tower absorbs energy and distributes frame deformation throughout the height of the building.

A consequence of the inelastic redistribution of the forces in a structure is a change in its force-time history, with an increase in the duration of near-maximum load conditions. This results in increased coincidence between severe attacks due to forces along different structural axes. This concurrence increases shear in beam-column connections, and increases the axial loads on corner columns.

Laboratory tests show deterioration of building components under inelastic deformation. At the Building Research Institute of the Ministry of Construction, Japan, cyclic inelastic deformations have been applied to several five-storey reinforced concrete buildings. After several cycles the buildings suffered a progressive loss of strength and stiffness. Tests by Bresler and Bertero (1) on the cyclic loading of reinforced concrete beams have shown a progressive loss of beam strength and stiffness. Cyclic loading tests on beam-column connections for steel frames, by Popov et al (2), have shown that flange instability reduced the energy absorbing capacity of the members.

During recent earthquakes many structures, designed in accordance with current procedures, have suffered severe damage during inelastic deformation. These earthquakes include Anchorage 1964 Caracas 1967, Tokachi-oki, 1968 Manila 1968 (3), 1970 (4); San Fernando 1971 Peripheral and particularly corner columns of reinforced concrete frames sometimes suffered severe damage under combined bending, shearing, and axial loads. Many short columns did not form plastic hinges, but failed in diagonal tension with little absorption of energy. As a result of these failure mechanisms many structures did not absorb much energy before the onset of severe damage.

The difficulties inherent in providing earthquake resistance during inelastic deformation can be reduced by careful attention to detail. However some structural systems such as shells and prestressed concrete members have a limited capacity to absorb energy by hysteresis. All components which must support loads in addition to absorbing energy must be given a form which is not optimum for their energy absorbing role.

Design procedures are being modified to compensate for the limitations of the present methods of resisting earthquakes. Proposals are being examined for major revisions in the seismic provisions of the building codes for New Zealand, Japan and Los Angeles (5). These proposed code changes take into account recent damaging earthquakes, building component testing, and

analysis of structural systems. In general these proposal provide for higher earthquake loads, smaller demands on the inelastic reserve of earthquake resistance, and a greater degree of concurrency of the attacks along the building axes.

Many of the problems arising from dependence on an inelastic reserve of earthquake resistance would be reduced if a structure contained components whose primary function was the absorption of vibrational energy. The components supporting gravity and earthquake loads would then remain elastic or suffer reduced inelastic deformations. The structural deformations would then be easier to assess and to control. Also there would be less concurrency of the attacks along the different axes of a structure. For moderate earthquakes the energy absorbing components would increase the stiffness of the structure and hence reduce non-structural damage. Care would be necessary to avoid damage to the energy absorbers by an excessive number of operating cycles during wind storms. Such energy absorbing components could be optimized for their special function, and they could be checked after a very exceptional wind storm or earthquake, and replaced where necessary.

2. ENERGY ABSORBERS FOR STRUCTURES

A number of tall steel-frame buildings in Japan contain special reinforced concrete panels whose primary function is to absorb energy (6). The lateral stiffness contributed by these panels reduces non-structural damage during moderately severe earthquakes and their hysteresis absorbs vibrational energy during severe earthquakes. While these energy absorbing panels are an important advance, they do increase the building weight, and despite careful development they must deteriorate under cyclic inelastic deformation. Their size and weight would make them difficult to replace. When material properties are considered it would seem more appropriate to use the plastic deformation of steel components to absorb energy, and to use reinforced concrete to carry vertical loads where weight is not important.

Energy absorbers based on the plastic deformation of steel are being developed, and their application to earthquake resistant structures, and to structural components, are being investigated. The plastic deformations utilized have included rolling (with bending) of flat strips, torsion of square and rectangular bars, flexure of beams of rectangular section, and combinations of these. The cyclic loading tests were designed to measure the energy absorbing capacity, the fatigue resistance, and the stability, of steel components deformed in these ways. The energy absorbers under development fall into one of three classes depending upon the dominant type of plastic deformation.

Type A These absorbers use the rolling (bending) of U-shaped strips of mild steel. They may be located between the near faces of a pair of flexibly-based shear walls. Under side-sway such walls will have parallel relative motion to operate the absorbers, Fig. 1(a).

Type B These absorbers deform square or rectangular bars in torsion and bending, with torsion predominating. They operate between components which have a varying separation during earthquakes, Fig. 1(b). A large load capacity may be provided by these devices. A possible application is installation at the bases of piers and towers, which are permitted a stepping action under severe earthquake forces.

Type C These absorbers utilize the flexural defomation of short rectangular steel beams. The physical dimensions make them suitable for installation in the diagonal braces in a steel or reinforced concrete frame, Fig. 1(c). As two simple cantilevers in a bow formation they may be scaled up to give a very large capacity. A possible large capacity application is installation as an anchoring component at the end of a continuous bridge deck, to absorb longitudinal vibrations of the deck and the piers.

Example The energy absorber forces F, and absorbing capacity E, required for a typical tall building can be indicated by an example. Consider a 20-storey steel frame building with floor masses of 10^6 lbs. Let the first mode shape be triangular and assume that an adequate coulomb damper is one which absorbs all the vibrational energy in one cycle of constant amplitude. Then,

$F = 0.085.10^6 D/T^2$ lb; $E = 0.34.10^6 D^2/T^2$ in-lb/cycle

where T, D = natural period and top displacement

When T = 2 sec, D = 8" (corresponding to 0.1 g base shear)

Then F = 170,000 lbs; $E = 5.5.10^6$ in-lb/cycle

The required energy absorption is not high. With a capacity of 1 000 in-lb/cycle per cubic inch the building requires 1,600 lb of energy absorbing steel.

Practical situations call for increased damping forces; the hysteresis of typical absorbers is 60% of that of a coulomb damper, the summed displacements along diagonal braces is about 70% of the summed interstorey displacements, and the deformation of diagonal braces would reduce absorber effectiveness to about 80%. This calls for a damping force of about 500,000 lb at each storey, with an absorber stroke of about 0.6 inches. Although it would be possible to develop such absorbers the building may be modified so that adequate damping can be provided by a smaller number of simpler absorbers. A more favourable building would have rigidly braced upper storeys. The lowest 2 or 3 storeys would be flexible and they would contain the energy absorbers.

Suitable energy absorbers may permit the use of new types of earthquake resistant structure. Horizontal forces are strictly limited if a tall structure is allowed to step from side to side on a narrow base. However such structures tend to have very low self damping. Hence periodic components of ground motion may

build up a severe swaying motion with large vertical velocities which cause troublesome forces. It has been found that the increasing period, which results from increasing stepping motion, causes increased swaying motions in particular cases (7). Energy absorbers of moderate capacity reduce the stepping motion to a moderate level. A proposed railways viaduct, with stepping A-frame piers, has been investigated for the New Zealand Railways Department (7). The three central piers were about 200 feet high and each had a tributary weight of 2,500,000 lbs. The response to the NS component of the El Centro, 1940, earthquake was calculated. In particular cases it was found that the introduction of a damping force of 50,000 lbs at each pier foot reduced the maximum height of stepping to one half, and reduced the number of steps by a factor of 4. Type B energy absorbers with half this capacity, for use in pairs at the feet of the A-frames, have been developed and tested.

Existing types of structure which have a limited capacity for absorbing energy may benefit from the introduction of energy absorbers. These include prestressed concrete structures, shell structures, and electrical systems supported on insulator columns. Some structural components may benefit from the inclusion of energy absorbers in their bracing systems. The tall racks of equipment in telephone exchanges could have energy absorbers installed between the racks and the tie rods which anchor their tops. Nuclear reactors have certain components essential to their safe operation and shut-down. These include piping systems which may be rendered safer under earthquake attack by installing dampers. When the required dampers are in regions of high radiation, energy absorbers of type B or C would be particularly convenient since they are virtually maintenance free.

3. DEVELOPMENT AND TESTING OF ENERGY ABSORBERS

The broad characteristics of three types of absorber are given. A more detailed description of component testing and of earlier developments is given in the reference (8).

(a) Rolling-Bending of Thin U-shaped Strips

An energy absorber using a single U is shown in Fig. 1(a). For the double U absorber shown in the test rig, Fig. 2(a), the maximum force F, the energy absorbed per unit volume per cycle e, and the nominal strain ε_m are,

$$F = \hat{\sigma} bt^2/2R \; ; \; e = Fcs/\pi Rbt; \qquad \varepsilon_m = t/2R \tag{1}$$

where $\hat{\sigma}$ = effective cyclic yield stress
= 60,000 lb/in^2, for strains of about 10%, in mild steel
b,t, R = loop width, thickness, and mean radius
s = total length of stroke
c = hysteresis area/circumscribing rectangle
$\doteqdot$ 0.65 for large s

Since the number of cycles to failure is reduced by kinks which form particularly for low strains, appropriate strain levels are 0.05 to 0.10 with a life of about 150 down to 70 cycles.

A mild steel absorber with b = 3 in, t = 0.5 in, and R = 2.75 in, and a stroke s = 4 in gave;

$$F = 9{,}000 \text{ lb}, \quad e = 1{,}800 \text{ in-lb/cycle/in}^3, \quad c = 0.65$$

The nominal maximum strain was 9%, and the cycles to failure were 80, with a fall of only a few per cent in the force F.

(b) Torsional Energy Absorbers

A convenient form for a torsional energy absorber is shown in Figs 1(b), and 2(b). A high energy absorption per unit volume, and a life of several hundred cycles, is ensured by appropriate design of the joints between the deformed beam and the loading arms; a task facilitated by the rectangular beam section. Deterioration occurs slowly with the development of longitudinal cracks in the beam. The maximum force F, and the energy per unit volume, of the beam are,

$$F = \hat{\tau} t^2 (3b-t)/3r; \quad e = Fcs/btl \qquad (2)$$

where $\hat{\tau}$ = effective cyclic yield stress
b,t,l = beam width, thickness, length (one side)
r,s = lever length, stroke

The value of the shape factor c of the hysteresis loop is from 0.55 to 0.65.

A mild steel absorber with b = 5 in, t = 1.25 in, l = 5 in (each side), r = 8 in, and with a stroke S = 2 in gave;

$$F = 25{,}000 \text{ lb}, \quad e = 880 \text{ in-lb/cycle/in}^3, \quad c = 0.65$$

The force F fell steadily, by about 10% for each hundred cycles. The test was carried to 500 cycles, when F was 16,000 lb.

(c) Flexural Energy Absorber

A flexural energy absorber may have one of several basic forms, which include balanced pairs of simple cantilevers, and sets of beams with mid-point contraflexure. In terms of Fig.1 (c) cantilevers are obtained when rotation is allowed at the channel section and contraflexure is obtained with rotation prevented. While only part of the beams are deformed inelastically the flexural energy absorbers, in the double cantilever form, can be scaled for very large forces. Also they can be used in locations of limited thickness, such as a wall panel.

For simplicity a simple cantilever beam is considered. The maximum force F, and the energy per unit volume e, are given by

$$F = \hat{\sigma} bt^2/2l; \qquad e = 2Fcs/btl \tag{3}$$

where $\hat{\sigma}$ = effective cyclic yield stress
b, t, l = cantilever width, thickness, length
s = total stroke length

The value of the hysteresis shape factor s is about 0.4 to 0.5.

The effective yield stress may be expressed as

$$\hat{\sigma} \doteqdot \sigma_y (1 + \beta st/l^2) \tag{4}$$

where $\sigma_y \doteqdot 45\,000$ lb/in^2; $\beta \doteqdot 20$ (an emperical constant)

A mild steel absorber with b = 1 in, t = 0.375 in, and l = 3 in, and with a stroke S = 0.78 in gave;

F = 950 lb, e = 650 in-lb/cycle/in^3

The force F fell by about 5 per cent over the life of 320 cycles.

When the relationship between stroke length and the energy absorbed are considered, for the three types of absorber, it is found that type A absorbers are similar to coulomb dampers, type C absorbers are similar to viscous dampers (operated at a single frequency), while type B absorbers have an intermediate character.

Rapid cycling, at about 2.5 cycles/second was performed with small type B absorbers, and temperature rises of up to 300°C occurred. The absorbers performed satisfactorily, with changes of a few per cent in the deforming force. The force appeared to depend on temperature, the relationship being similar to that for the yield strength of mild steel in tension.

4. CONCLUSION

Larger energy absorbers, and absorbers for particular situations, are being developed. Absorbers of type B should scale readily to a force of about 2×10^5 lb, while simple absorbers of type C should scale to more than 10^6 lb.

Reliable energy absorbers should increase the safety of many types of structure under earthquake attack. When suitable energy absorbers are available some structural forms will be modified, and new structural forms will be developed, to take advantage of the benefits which they confer.

5. ACKNOWLEDGEMENT

The authors wish to acknowledge the assistance of D. E. Baguley of P.E.L. Mechanical Engineering Section for assistance with test equipment, and for his work on the rapid cycling tests.

6. REFERENCES

1. B. Bresler and V. Bertero, "Behaviour of Reinforced Concrete Under Repeated Load", Journal of the Structural Division, A.S.C.E., ST 6, 1968

2. E. P. Popov and R. B. Pinkney, "Reliability of Steel Beam-to-Column Connections Under Cyclic Loading", Procs. 4th World Conference on Earthquake Engineering, Vol. II, Chile, 1969, pp B-3, 15-30.

3. S. Omote, Y. Osawa, I. Skinner and Y. Yoshimi, "Phillippines, Luzon Earthquake of 2 August 1968" Unesco, Paris, 1969.

4. I. Skinner, M. Watabe, "Philippines, Eastern Luzon Earthquake of 7 April 1970" Unesco, Paris, 1970.

5. "Proposed Building Code Amendments - Group II - Resulting from the San Fernando Earthquake" Building and Safety Commission, File No. 72.501.5, 1972.

6. Kiyoshi Muto, "Earthquake Resistant Design of 36-Storeyed Building" of Procs. 4th World Conference Earthquake of Engineering, Vol. III Chile, 1969, pp J-4, 16-33.

7. J. L. Beck, R. I. Skinner "The Seismic Response of a proposed Reinforced Concrete Railway Viaduct" Report No. 369. Physics and Engineering Laboratory, D.S.I.R., Private Bag, Lower Hutt, New Zealand.

8. J. M. Kelly, R. I. Skinner, A. J. Heine, "Mechanisms of Energy Absorption in Special Devices for use in Earthquake Resistant Structures", Bull of N.Z. Soc for Earthquake Engineering, Vol. 5, No. 3, 1972.

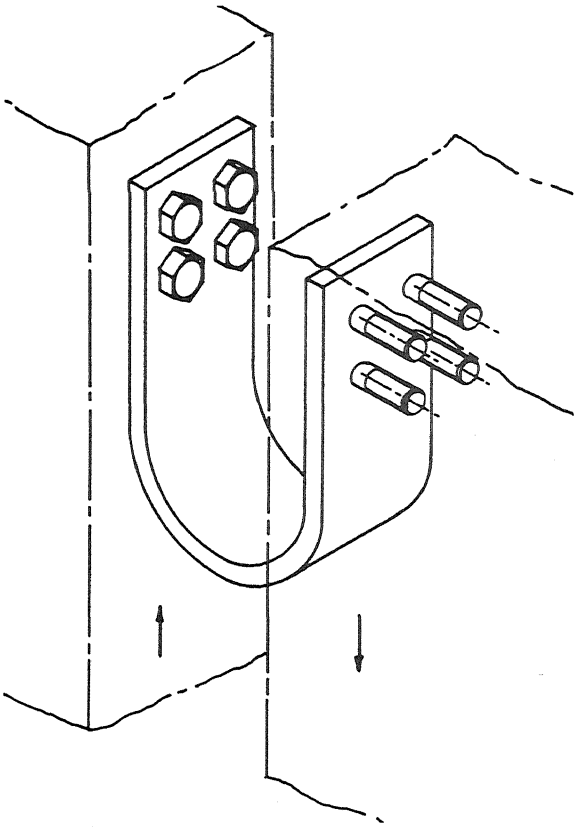

Fig. 1(a) Schematic of Rolling-Bending of U-Shaped Strip

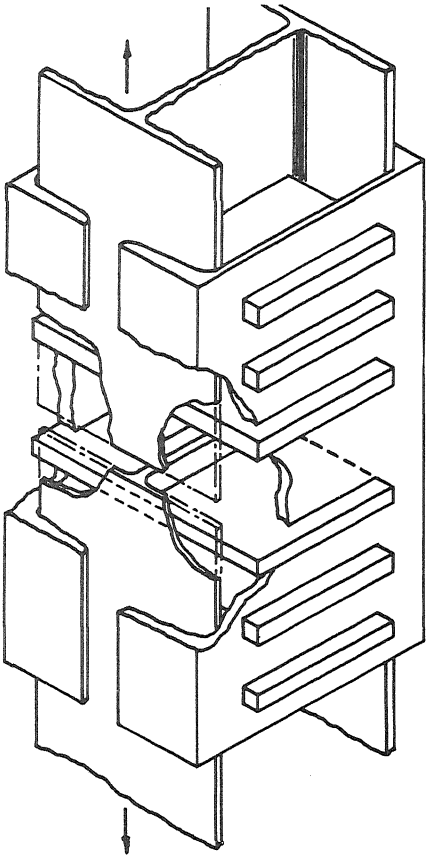

(c) Flexural Energy Absorbing Device to fit Diagonal Bracing

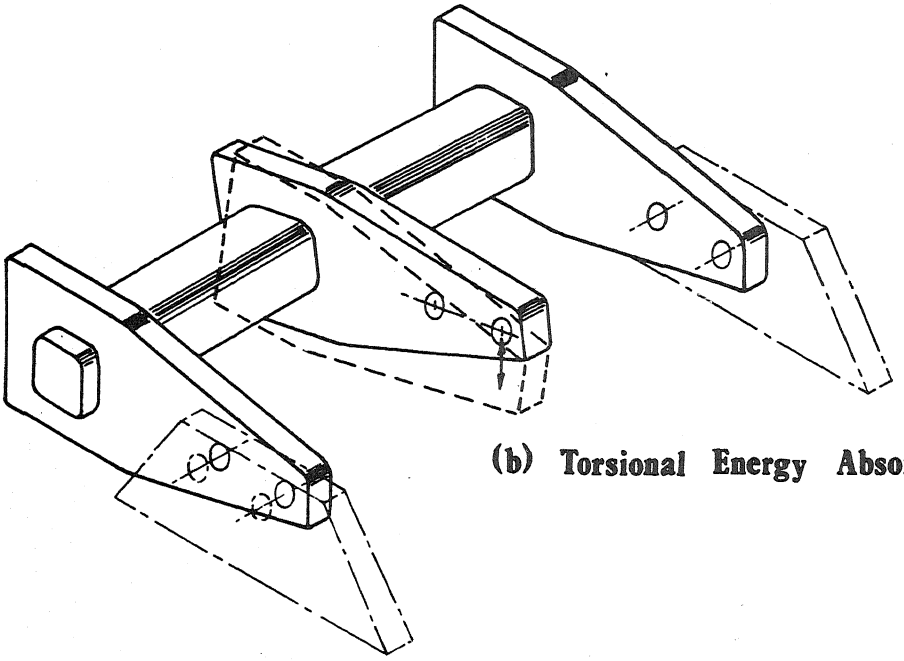

(b) Torsional Energy Absorbing Device

Fig. 2(a)

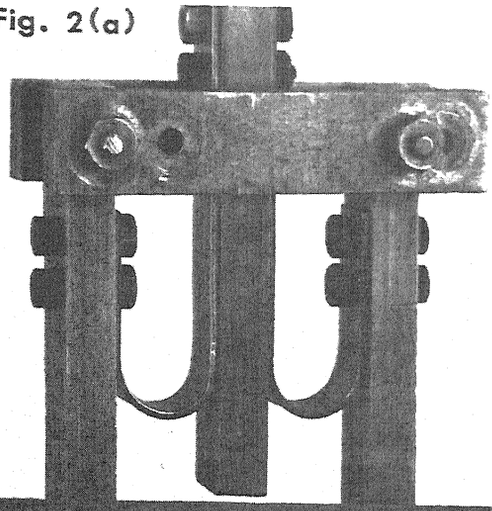

Fig. 2(a) U-Strip Test Jig

Fig. 2(b) Prototype Torsional Shock Absorber

Fig. 2(c) Test Record for a Type B Absorber

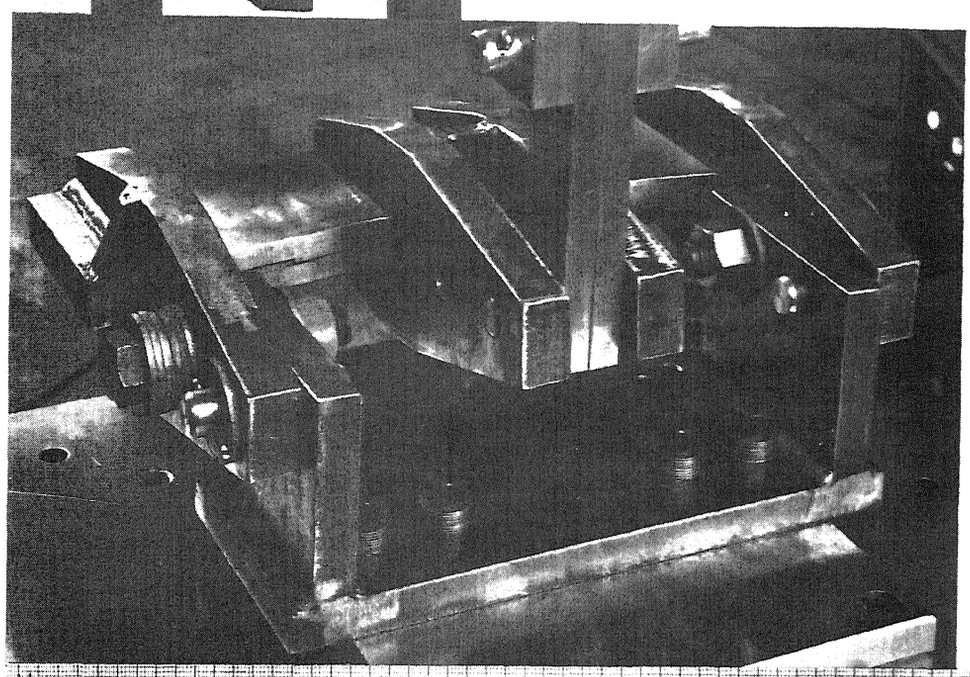

Fig. 2(b)

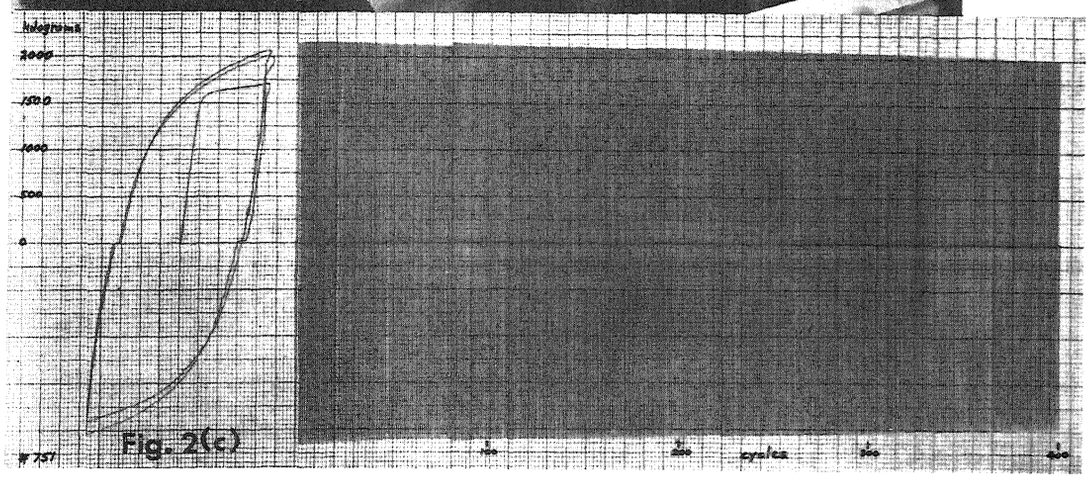

Fig. 2(c)