SEISMIC RETROFIT USING CONTINUOUS FIBER SHEETS

Yasuhiro MATSUZAKI[1], Katsuhiko NAKANO[2], Shigeru FUJII[3] And Hiroshi FUKUYAMA[4]

SUMMARY

The research on seismic retrofit of RC members using continuous fiber sheets is rapidly advancing in Japan. These research activities have been accelerated since 1995 Hyogo-ken Nanbu Earthquake because this retrofitting technique has an advantage due to lightweight, flexibility, non-welding, and easy handling in construction works. The most preferable retrofitting technique for the existing building being in use is jacketing RC columns with carbon or aramid fiber sheets because of the advantage above. Recently many results of the research on columns with wing wall, short column with spandrel wall, earthquake resisting wall, girder with slab (T-shaped girder) and non-structural reinforced concrete wall have been reported in Japan. This paper introduces, first of all, these experimental research results and the seismic retrofitting effects by the continuous fiber sheets are comprehensively evaluated. Shear strength and the improvement of ductility is discussed to evaluate the effect of reinforcement of continuous fiber sheets. And this paper reports on the comparative studies about several influencing parameter on column capacities and the applicability of current RC design equations proposed by the Architectural Institute of Japan using the database. Based on the analysis, following findings were obtained. (a) Shear strength of retrofitted columns can be predicted by the above design equations based on the same strut and tie models as for usual RC columns. (b) Factors governing the lateral deformation capacity of retrofitted columns were discussed and an evaluation method to predict the ductility ratio as a function of the shear and flexural strength ratio was examined. As the summary, the problems which should be solved, research direction and prospect are pointed out for the future research on seismic retrofit by continuous fiber sheets. Research needs for establishment of a design method when various members are reinforced by continuous fiber sheets in the future are also discussed.

INTRODUCTION

The results of studies on the application of such new materials as the carbon and aramid fiber as structural materials began to be made public gradually in around the mid-1980s. In those days, efforts were being made to establish a technology for forming such new materials into continuous fiber reinforcing bars using resin bond, etc. which could be substituted for the reinforcing bars. By around 1993, it became clear that carbon and aramid fibers could be used as structural materials. In the early 1990s, the durability of concrete structures came to attract growing attention as a problem which was strongly calling for the establishment of techniques to repair or retrofit existing concrete structures. This triggered research and development on the application of continuous fiber sheet reinforcement. On January 17, 1995, in Japan, the Hyogo-ken Nanbu Earthquake occurred, causing damage to many of the structures. As a result, the social demand for seismic diagnosis and retrofit of existing reinforced concrete buildings became strong. It accelerated the studies aimed to establish technology for

[1] *Faculty of Engineering , Science University of Tokyo, Tokyo, Japan Email: ymatsu@rs.kagu.sut.ac.jp*
[2] *Faculty of Engineering, Science University of Tokyo, Tokyo, Japan E-mail:knakano@rs.kagu.sut.ac.jp*
[3] *Dept of Global Environment Engineering, Kyoto University, Kyoto, Japan Email: fujii@archi.kyoto-u.ac.jp*
[4] *Senior Researcher, Dr .eng., Building Research Institute , Tsukuba, Japan Email:fukuyama@kenken.go.jp*

strengthening existing buildings with continuous fiber sheet reinforcement. This studies on the application have been expanded to cover not only columns but also columns with wing walls, beams, earthquake resisting walls, etc. For columns, Japan Building Disaster Prevention Association (JBDPA) and the Building Center of Japan (BCJ), respectively, have approved guide lines for design and construction of seismic retrofit by continuous carbon and aramid fiber sheets. In this paper, methods for evaluating the seismic retrofit of regular columns with continuous fiber sheets are described. Then, this paper describes the latest results of those experimental studies and clarifies the problems that must be solved before a truly reliable method for evaluating the seismic retrofitting effects with continuous fiber sheets can be established.

SEISMIC RETROFITTING EFFECTS OF CONTINUOUS FIBER REINFORCEMENT AND EVALUATION OF EFFECTS

Improvement of shear capacity

The results of an experiment conducted to grasp the seismic retrofitting effect of continuous fiber sheets to improve the shear capacity of a beam are described below [Araki et al.,1997a]. In this experiment, all the specimens had the same shear reinforcement ratio [$(p_w)r$=0.19%], with the amount of resin-bonded carbon and aramid fiber sheet reinforcement varied. It can be seen that all the strengthened specimens markedly improved in shear capacity. Like the RC beams reinforced with shear reinforcing bars, the strengthened specimens shown an increase in maximum shear capacity in proportion to an increase in amount of shear reinforcement, $\Sigma(p_w \cdot \sigma_{wy})$, calculated by the following equation-1. The above results indicate that the carbon and aramid fiber sheet are as effective as the conventional shear reinforcing bar and that their shear strengthening effect can be evaluated by the existing shear reinforcement method. However, the observed fiber strain at maximum shear is usually less than its potential elongation capacity. To evaluate the shear strengthening effect it is convenient to define the effective fiber strain.

$$\Sigma(p_w \cdot \sigma_{wy}) = (p_w)r \cdot (\sigma_{wy})r + (p_w)c \cdot (\sigma_{wy})c \qquad (1)$$

$(p_w)r$: shear reinforcement ratio of reinforcing bars, $(p_w)c$: shear reinforcement ratio of fiber sheets, $(\sigma_{wy})r$: yield strength of reinforcing bars, $(\sigma_{wy})c$: nominal tensile strength of fiber sheets (nominal tensile strength : catalogue value considering the safety allowance of 3σ [σ : standard deviation])

Improvement of ductility

The results of an experiment indicating that an regular column which is shear-strengthened by continuous fiber sheets changes in failure mode from shear failure to flexural failure and that the regular column markedly improves in ductility as the amount of shear reinforcement is increased are described below [Kataoka et al.,1997].

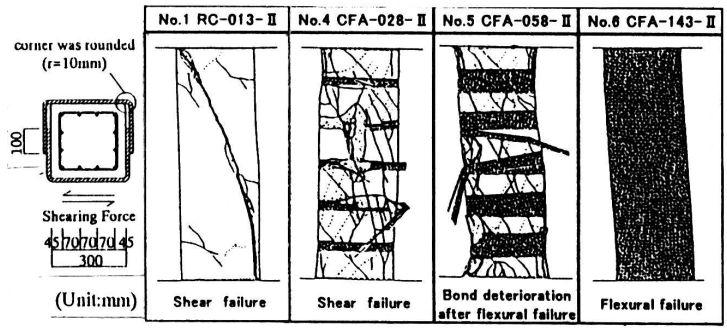

Fig.1 Ultimate failure conditions of Column specimens

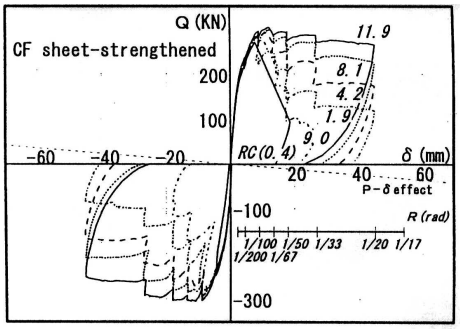

Fig.2 Comparison of Q-δ relationship

The ultimate failure conditions of specimens are shown in Figure 1. In this experiment, all the specimens strengthened by continuous fiber sheets had the same shear reinforcing bar ratio [$(p_w)r$=0.13%], with the amount of resin-bonded fiber sheet reinforcement varied. Application of load was anti-symmetric moment condition with constant axial force (axial force ratio: 0.2). Figure 2 shows envelopes of the relationship between shear force (Q) and displacement (δ). The above results indicate that by a regular column strengthened by carbon or aramid fiber sheets, it is possible to improve the column's shear capacity and cause its failure mode to shift from shear failure to flexural failure, and that the column's ductility improves as the amount of shear reinforcement is increased.

Evaluation of seismic retrofitting effects of regular columns

Of the guidelines for design and construction of seismic retrofit method by continuous fiber sheets, some have obtained evaluation of JBDPA and the others have obtained evaluation of BCJ. Basically, these guidelines are applicable to existing regular columns of reinforced concrete structures. To develop the design guidelines, the committee for 'Structural Use of NFRM (New Fiber Reinforcing Materials)' in Architectural Institute of Japan (AIJ) has been collecting the test data. The compiled database contains a total of 236 column specimens with rectangular sections. Table 1 shows the classification of the data regarding the types of the strengthening method and the observed failure modes for regular columns with deformed bars. Table 2 shows the variations of the experimental parameters.

Table 1 Classifications of regular column data

Specimens types	flexural failure	Shear failure	Bond failure	Shear failure after flexural yielding	total
RC	3	37	4	9	53
Carbon Wrap	32	41	9	20	102
Aramid Wrap	11	21	0	10	42
Steel Jacket	11	3	1	1	16
total	57	102	14	40	213

*** deformed bar :213, round bar : 23**

Table 2 Variations of experimental parameters

	concrete strength σ_B [MPa]	sheet reinf. ratio P_{wf}[%]	shear span to depth ratio M/(VD)
min.-max.	17-37	0.01-0.45	1.5-6.0
Frequent range	21-30	0.04-0.10	1.5-2.0
	tensile reinf. Ratio P_t[%]	axial stress ratio $P/(A_c\,\sigma_B)$	Column depth D[mm]
min.-max.	0.5-2.5	0.0-0.6	200-600
Frequent range	1.0-1.5	0.1-0.2	200-300

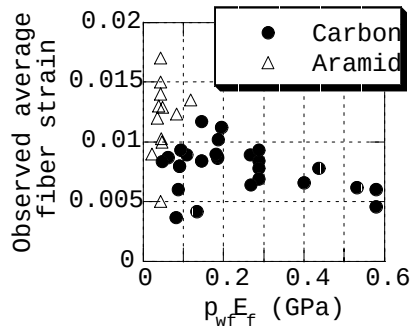

Fig.3 Fiber Strain at Maximum Shear

Shear capacity

1) **Shear capacity formula**

To calculate shear capacity, shear strength equation in the AIJ(Architectural Institute of Japan)'s Design Guideline Based on Ultimate Strength Concept [AIJ, 1990] is used. This equation assumes the shear resisting mechanism as the sum of the truss mechanism and arch mechanism. It also assumes that the fiber sheet reinforcement wrapped around a column plays the part of a tension member in the truss mechanism as does the shear reinforcing bars in the concrete. The formula is the following equation-2.

$$Q_{su} = b \cdot j_t \cdot \sum(p_w \cdot \sigma_{wy}) \cdot \cot\phi + \tan\theta \cdot (1-\beta) \cdot b \cdot D \cdot \nu_c \cdot \sigma_B / 2$$

$$\text{Where} \quad \tan\theta = \sqrt{(L/D)^2 + 1} - L/D \qquad (2)$$

$$\beta = \left\{(1+\cot^2\phi) \cdot \sum(p_w \cdot \sigma_{wy})\right\} / (\nu_c \cdot \sigma_B)$$

b, D: width and overall depth of the section, L: clear span of the member,

j_t: distance between the top and bottom bars, σ_B : concrete strength,

σ_{wy} : shear reinforcement strength, p_w: shear reinforcement ratio,

$\nu_c = 0.7 - \sigma_B / 200$ (N/mm^2): effective concrete compressive strength ratio,

ϕ : angle of the compressive strut in the truss mechanism,

$$\cot\phi : \text{minimum of } \left\{2.0,\ j_t/(D \cdot \tan\theta),\ \sqrt{\nu_c \cdot \sigma_B / \sum(p_w \cdot \sigma_{wy}) - 1.0}\right\}$$

2) **Calculation of $\Sigma(p_w \cdot \sigma_{wy})$ in shear capacity formula**

The basic equation used for the calculation is the following equation-3.

$$\sum(p_w \cdot \sigma_{wy}) = (p_w)r \cdot (\sigma_{wy})r + \alpha_1 \cdot \alpha_2 \cdot (p_w)c \cdot (\sigma_{wy})c \qquad (3)$$

α_1 : effectiveness coefficient of shear reinforcement by fiber sheets

α_2 : ratio of fiber sheet Young's modulus to reinforcing bar Young's modulus

Figure 3 shows the average fiber strains at maximum loads reported in several papers. The effectiveness of fibers decreases with an increase of reinforcement amount. The analysis shows that the strength equation for RC is

fundamentally available for retrofitted columns by fiber wrapping using the modulus of elasticity of fibers. However, the influence of characteristic natures of each fiber type, such as the small elongation capacity, the poor resistance against direct shear and the smaller strength at the bent portions etc. should be taken into account. For example, α_1 is determined ratio of effective fiber strain to strain at $(\sigma_{wy})c$ or 2/3 of $(\sigma_{wy})c$ in case of using carbon fiber sheets.

4) **Bond capacity formula**

Sear strength equation-2 in the AIJ's Design Guideline [AIJ, 1990] is applied. The maximum shear force transferred by the truss action is limited by either of the shear reinforcement force, the compressive capacity of diagonal concrete strut or the main reinforcement bond force (Q_{sub}). It suggests that it is important to consider the main reinforcement bond capacity for shear strength evaluation. The effect of fiber sheet wrapping on bond strength should be made clear. Recently conducted research reported that the fiber sheet wrapping was more effective than hoops.

$$Q_{sub} = \tau_{bu} \cdot \Sigma\psi \cdot j_t + \tan\theta \cdot (1-\beta) \cdot b \cdot D \cdot \nu_c \cdot \sigma_B / 2 \tag{4}$$

Where $\tau_{bu} = \tau_{co} + \tau_{st}$

τ_{bu} : bond strength, τ_{co} : bond strength effected by concrete, τ_{st} : bond strength effected by shear reinforcement, $\Sigma\psi$: total nominal perimeter of the bars

5) **Bond strength (τ_{st})**

In the calculation of main reinforcement bond strength, the shear reinforcement ratio, p_w, is assumed as the sum of the shear reinforcement ratio of steel bars and shear reinforcement ratio of continuous fiber sheets. It is calculated by the following equation-5. For example, β_1 is determined 1.0 or 3.0 in several previous test specimens.

$$\tau_{st} = K \cdot \sqrt{\sigma_B} \cdot \sum(p_w) \tag{5}$$

Where $\sum(p_w) = (p_w)r + \beta_1 \cdot \beta_2 \cdot (p_w)c$

β_1 : effectiveness coefficient of bond reinforcement by continuous fiber sheets

β_2 : ratio of fiber sheet Young's modulus to reinforcing bar Young's modulus

Evaluation of ductility

Ultimate ductility is calculated from shear safety margin (shear capacity of structural member against shear force obtained from flexural capacity) and the μ factor is defined by equation-6.

$$\mu = 10 \cdot (Q_{su} / Q_{mu} - 1) \qquad [1 \le \mu \le 5] \tag{6}$$

Q_{su}: shear capacity, Q_{mu}: shear forrce obtained from flexural capacity

The calculation results by using "*2.3.1 Shear capacity*" are shown in Figure 4 and Figure 5. The specimens strengthened by continuous fiber sheets were made assuming their effective strength as the stress at the time when the strain is 0.01 ($\alpha_1 \cdot (\sigma_{wy})c$ =2350MPa, α_2 =1.0). Figure 4 shows the correspondence between evaluated and measured values of specimens. The database used in this examination was collected in NFRM Committee. The calculation results nearly correspond to the failure mode. Therefore, the evaluation formula is considered valid as one for evaluating the strength of regular columns. Figure 5 shows the evaluation of ductility of specimens. Shear safety margin is roughly given by the linear equation shown in the Figure.

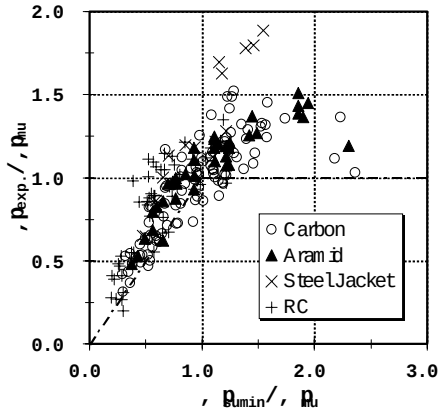

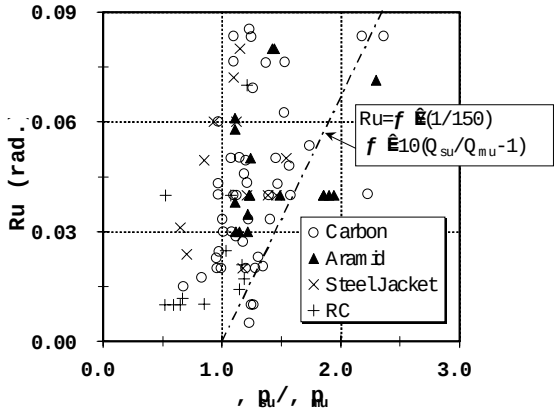

Fig.4 Correspondence between **Fig.5 Evaluation of ductility calculated and measured values**

*$Q_{exp.}$: measured maximum strength, Q_{mu}: calculated flexural capacity

*Q_{sumin} : minimum of (Q_{su}:calculate shear capacity, Q_{sub}:calculated bond capacity)

PERFORMANCE OF STRENGTHENED RC MEMBERS

Strengthening effect of RC columns under high axial force

In an experiment on the ductility of an column which is strengthened by continuous fiber sheets, the axial force ratio is normally set in the range 0.1 to 0.3σ_B (σ_B is compressive strength of concrete.). Based on results, it has been reported that the ductility of such regular column can be evaluated in nearly the same way as the ductility of regular column which are provided with shear reinforcing bars. Described below are the results of an experimental study the strengthening effect of RC columns under axial force exceeding 0.3σ_B, that is, in the range 0.4 to 0.6σ_B [Hayashida et al., 1998]. The authors conclude that even when the axial force ratio in the range 0.35 to 0.6σ_B, it is possible to secure an ultimate rotation angle of 1/30 by providing the member with a suitable amount of fiber sheet reinforcement. The results [Masuo et al., 1998] of another experiment indicate that the strengthening effect of carbon fiber sheet is inferior to that of steel plate due to the rupture of sheet and the buckling of main reinforcement. Concerning the ductility of an RC column provided with continuous fiber sheet reinforcement under high axial force, it can hardly be evaluated on a reliable basis due partly to the scarcity of experimental data. It is hoped that studies on this subject, including ability of continuous fiber sheet to prevent the main reinforcement from buckling, will be made in the future.

Strengthening effect of RC columns with mortar finishing

In providing existing buildings with seismic retrofit, it is necessary to minimize the noise, vibration, dust, etc. produced during execution of the retrofitting work. In addition, since the work is subject to various limitations (e.g., time limit), an efficient work method is called for. In the case of apartment houses, etc., the retrofitting work may have to be executed without evacuating them. Literature [Fukuyama et al., 1998] presents that the carbon fiber sheet produces a shear strengthening effect regardless of the presence or absence of mortar. It is expected that experimental results as to relationship between the strengthening effect and the type of finishing material, condition of finish, and thickness of finishing material will be accumulated so that a reliable method for evaluating the effect of reinforcement can be established as early as possible.

Strengthening effect of RC column with spandrel

A short column with a spandrel or suspended wall having a short inside span is subject to stress concentration because of its high rigidity. It is also susceptible to brittle shear failure because of its poor ductility. For these reasons, in implementing seismic diagnosis and retrofit design of existing buildings, such a short column calls for special consideration. Literature [Shiohara et al., 1998] presents the results of an experiment with a short column which was shear-strengthened by carbon fiber sheet. The specimen having a weak spandrel shows a stable flexural behavior, when the column was strengthened so as to cause the spandrel to collapse and the inside span to increase gradually. Figure 6 (a) shows example of this failure. On the other hand, there are few experimental studies on the use of continuous fiber reinforcement to improve the structural performance of a short column with a spandrel in a right-angled direction against a spandrel wall. Figure 6 (b) shows examples of failure [Kobayashi et al., 1999]. The specimen having an only short column strengthened by carbon fiber sheets shows shear failure of the column with a spandrel. The specimen having a strengthened column and spandrel by carbon fiber sheet shows good ductility till the rotation angle reaches 1/20 (Figure 7 (a)). If the application of continuous fiber reinforcement can improve the structural performance of those short columns, it is expected to become a useful method in seismic retrofit design.

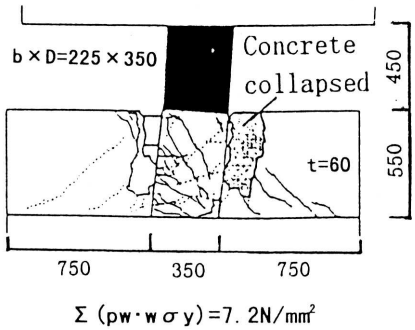

(a) Horizontal directuion against the wall

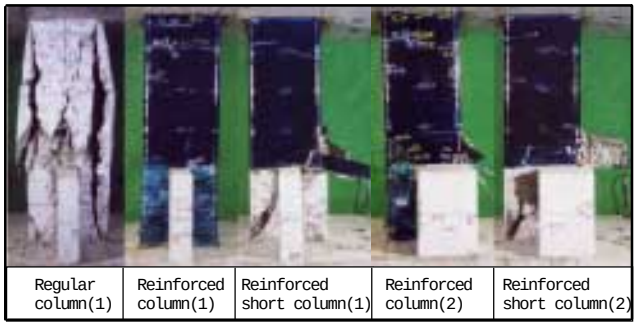

(b) A right-angled direction against the wall

Fig.6 examples of failure with spandrel

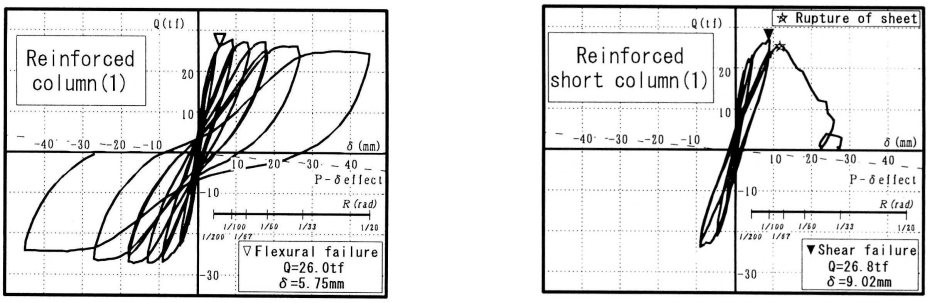

(a) a short column and spandrel strengthened (b) an only short column strengthened

Fig.7 Q-δ relationship with spandrel (loading to a right-angle direction against spandrel)

Strengthening RC columns with side wall

Many of the columns of existing buildings have side walls. When added with side walls, regular columns increase in rigidity and become subject to stress concentration. In addition, as the shear span ratio decreases, they become susceptible to brittle shear failure. Experimental studies on the use of continuous fiber reinforcement to improve the shear capacity of columns with side walls have been carried on [Iso et al., 1997]. RC columns with side walls can be shear-strengthened with continuous fiber sheet in various ways. For example, the sheet may be wrapped around or applied only to the surface, only the RC column or the whole unit of RC column with side wall is reinforced, etc. therefore, it is hoped that an optimum reinforcement method for a particular purpose will be clarified and that a reliable method for evaluating each of those methods will be established.

Shear-reinforcement of T-beams

It is considerably difficult to shear-reinforced RC beams, which are normally T-beams, that is, combinations of a beam and a floor slab. When it comes to reinforcing such T-beams with continuous fiber sheet, it is difficult to wrap them up in the sheet. Literature [Araki et al.,1997b] reports the results of an experiment conducted using T-beam specimens to measure the strengthening effect when it was applied only to the surfaces of the beam underneath the slab. The relationship between the effect of reinforcement and the position of bonded sheet end was measured. Figure 8 shows the method of application and fixing of th sheet. All the specimens reach a maximum shear capacity when the sheet peels off at the time a crack opens along the root of the slab (Figure 9). These results indicate that the difference in the effect of sheet reinforcement due to the difference in fixing method is unclear. In order to shear-reinforced T-beams positively, it is necessary to employ the closed type of sheet reinforcement.

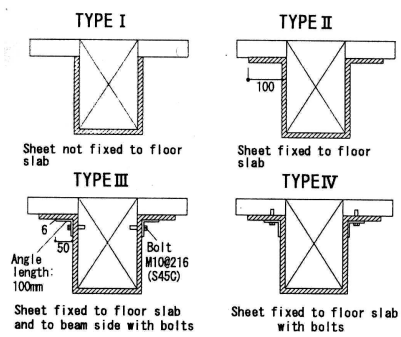

Fig.8 Method of retrofit

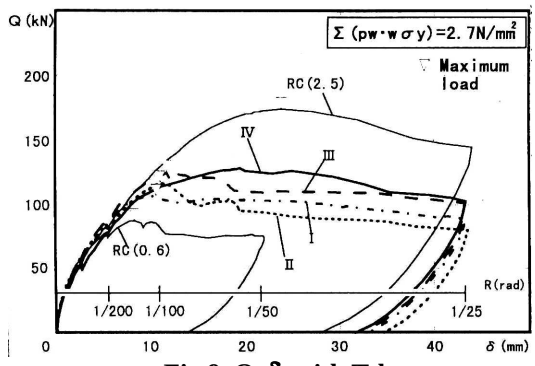

Fig.9 Q-δ with T-beams

Earthquake resisting wall shear-reinforced with continuous fiber sheet

As a means of seismic retrofit of existing buildings, providing additional earthquake resisting walls or increasing wall thickness is often adopted. However, these methods require extensive work in the field, including form work and concrete work. By contrast, the reinforcement method in which continuous fiber sheet is simply bonded to the surface of walls is expected to significantly improve the efficiency of reinforcement work. Literature [Yoshida et al.,1998] reports the results of experiments carried out to understand the structural performance of earthquake resisting walls strengthened by continuous fiber sheet. Figure-10 shows the pattern in which carbon fiber sheet was applied to a resisting wall. Examples of the experimental results are shown in Figure-11. The specimen strengthened with fiber sheet first increases in maximum strength and shows good ductility. In addition, since the application of fiber sheet restrains the occurrence and propagation of cracks in the wall, it is considered a promising reinforcement method which assures the performance of earthquake resisting walls. It is hoped that the aimed level of reinforcement of earthquake resisting walls with continuous fiber sheet

will be defined and that a reliable method for evaluating the reinforcing effect of continuous fiber sheet will be established.

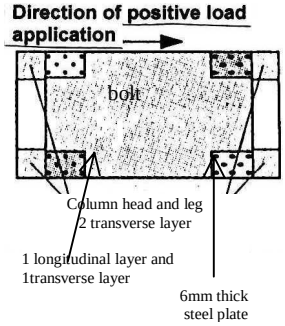

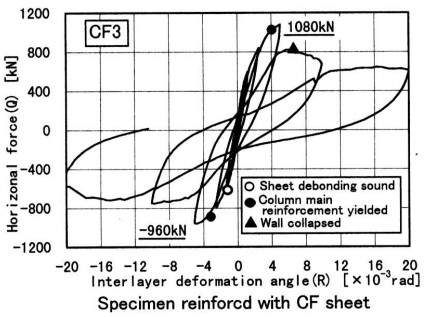

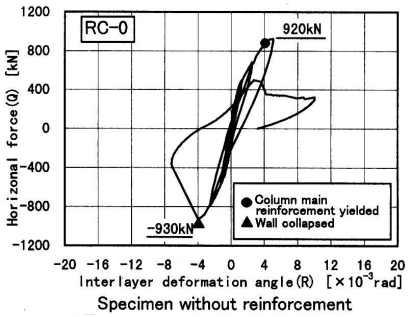

Fig.10 Pattern of reinforcement (CF3) **Fig.11 Q-R relationship with resisting wall**

Non-structural RC wall retrofitted by fiber sheets

In the past earthquakes, severe damages were observed in RC frames (columns and beams) with cast-in-place non-structural RC walls (mullion, spandrel and side-wall). However, there are no evaluation methods for designing the stiffness and the capacity of this RC frame type. Further no effective techniques are proposed to control the damage level of the cast-in-place non-structural RC wall. Literature [Sugiyama et al.,1999] reports the results of experiments carried out to suggest a seismic retrofit technique using carbon fiber sheets for controlling the failure mode of the RC frame with cast-in-place non-structural RC walls. The examples of cracking patterns are shown in Figure 12 The authors conclude that the seismic retrofit technique using carbon fiber sheets improves the damage level of non-structural RC walls in RC frame and the deflection of door opening and the residual crack widths can be controlled by retrofitting in carbon fiber sheets.

(a) conventional RC specimen

(b) strengthened specimen by carbon fiber sheets

Fig.12 Crack patterns

CONCLUSIONS

When RC members are reinforced with continuous fiber sheet, how much will their flexural capacity, shear capacity, and ductility improve ?. It is amazing to see that so many researchers have taken interest in these questions, carried out extensive experiments positively, and accumulated tangible research results in such a short period of time. It seems that the enormous impact the Hyogo-ken Nanbu Earthquake had on Japanese society triggered active research in this particular field. Actually, however, in most spheres of research in this field, experimental data is still insufficient to allow for correct evaluation of structural performance. In order for the application of continuous fiber sheet to become a promising seismic retrofitting technology, it is important to clearly understand the existing problems and determine the future direction of structural evaluation. In addition, new techniques to execute reinforcement work efficiently will have to be developed in the future.

REFERENCES

AIJ (Architectural Institute of Japan) (1990), *Design Guidelines for Earthquake Resistant Reinforced Concrete Buildings Based on Ultimate Strength Concept*, AIJ, Tokyo

Araki, N. and Matsuzaki, Y., et al. (1997a), “Experimental Study on Shear Capacity of Reinforced Concrete Beams using Sheet type Fiber”, *Proceedings of JCI*, Vol. 19, No.2, pp. 207 – 212

Araki, N. and Matsuzaki, Y., et al. (1997b), “Experimental Study on Shear Capacity of Retrofitted T-shaped RC Beams with Continuous Fiber Sheets”, *Summaries of technical papers of annual meeting of AIJ*, Structures 4, pp.703 - 704

Fukuyama, H., et al. (1998), “Strengthening Effect RC columns with Mortar Finishing, SRC columns and RC columns with Walls by Continuous Fiber Sheets”, *Proceeding of JCI Symposium on CFRC*, pp.133 – 140

Hayashida, N., et al. (1998), “Experimental Study on RC Columns under High Axial Load with Carbon Fiber Sheets”, *Proceeding of JCI Symposium on CFRC*, pp.113 – 118
Iso, M., et al. (1997), “Experimental Study on Seismic Behavior of Reinforced Concrete Columns with Wing Walls Retrofitted by Carbon Fiber Sheets”, *Proceedings of JCI*, Vol. 19, No.2, pp. 225 - 230
Kataoka, T., et al. (1997), “Experimental Study on Ductility of Reinforced Concrete Column using Sheet Type Fiber”, *Proceedings of JCI*, Vol. 19, No.2, pp. 213 – 218
Kobayashi, M. and Matsuzaki, Y., et al. (1999), “Experimental Study on Structural Performance of Reinforced Concrete Column with Spandrel Walls retrofitted by Carbon Fiber sheet”, *Proceedings of JCI*, Vol. 21
Masuo, K., et al. (1998), “Experimental Study on Strengthening Effect of Reinforced Concrete Columns under High Axial Load Using CFRP Sheets and Steel Plates”, *Proceeding of JCI Symposium on CFRC*, pp.105 – 112
Shiohara, H., et al. (1998), “Retrofit of Reinforced Concrete Short Columns with Spandrel Wall Using Carbon Fiber Sheets”, *Proceeding of JCI Symposium on CFRC*, pp.149 – 156
Sugiyama, T. and Matsuzaki Y., et al. (1999), “Experimental Study on the Performance of the RC Frame Infilled Cast-In-Place non-Structural RC Walls Retrofitted by Using Carbon Fiber Sheets”, *Proceedings of JCI*, Vol. 21, No.3, pp.1423 –1428
Yoshida, N., et al. (1998), “A Study on Retrofitting of Shear Wall with Continuous Fiber Sheet”, *Proceeding of JCI Symposium on CFRC*, pp.157162