13th World Conference on Earthquake Engineering
Vancouver, B.C., Canada
August 1-6, 2004
Paper No. 3127

DESIGN OF FRP JACKETS FOR SEISMIC STRENGTHENING OF BRIDGE T-JOINTS

Chris P. PANTELIDES[1], Jeff B. DUFFIN[2], and Lawrence D. REAVELEY[1]

.

SUMMARY

The unsatisfactory performance of bridges in recent earthquakes has been attributed to poorly designed details and outdated design principles. During the I-15 reconstruction project in Salt Lake City, five reinforced concrete bridge bents of the South Temple Bridge, built in 1963, were tested for a total of six tests. Three bents were tested in the as-is condition, two bents after a carbon fiber reinforced polymer (FRP) composite seismic retrofit, and one bent after a carbon FRP composite repair. The lessons learned from the I-15 bridge tests were used in developing improved recommendations for the seismic retrofit design of bridge T-joints using FRP jackets. The performance-based design procedure includes a nonlinear pushover static analysis of the as-is bent, and determination of the column FRP jacket thickness for plastic hinge confinement, shear strengthening, and lap splice clamping; a second analysis of the FRP retrofitted bent with an iterative design of the T-joints is then carried out. The FRP jacket in the T-joints consists of three elements: (1) diagonal FRP composite sheets for resisting diagonal tension, (2) FRP composite sheets in the direction of the beam cap axis for shear strengthening and increased flexural capacity, and (3) U-straps clamped at the column faces that go over the beam cap; the purpose of these straps is to anchor the longitudinal column bars that typically terminate prematurely, and to provide additional flexural strength. The in-situ tests demonstrated that application of an external FRP composite seismic retrofit to concrete bridges with inferior seismic design details provides adequate ductility and seismic performance.

INTRODUCTION

A significant portion of existing RC column bridges were built in the 1960's without adequate seismic details. The seismic upgrade of RC bridges using conventional and FRP composite materials is of interest in the rehabilitation of the infrastructure. In the 1994 Northridge earthquake the primary cause of collapse was insufficient ductility in the bridge structural frames, Zelinski [1]. In the 1995 Hyogo-ken Nanbu earthquake, columns exhibited shear failure because the volumetric steel ratio was low, the bars were not arranged for effective confinement or shear resistance, and a plastic hinge could not form

---

[1]Professor, Dept. of Civil & Env. Eng., University of Utah, Salt Lake City, UT 84112, USA.
[2]Structural Engineer, Michael Baker Jr., Inc., Midvale, UT 84047, USA.

(Taylor [2]). Seible et al. [3], conducted several lateral load tests of circular and rectangular columns retrofitted with FRP composites and provided design guidelines for such retrofits. Seible et al. [4] conducted a large-scale test on an "as-built" and four FRP jacketed rectangular flexural bridge spandrel columns to assess the effectiveness of different retrofit schemes using FRP composite jackets. The tests showed that retrofitting of one weakness without considering the next mode of failure could lead to ineffective and poor designs.

In-situ tests have been carried out on FRP retrofitted columns by Gamble and Hawkins [5] and on carbon FRP retrofitted bridge bents by Pantelides et al. [6, 7]. Three in-situ tests were performed in 1998 on the northbound bents of the South Temple Bridge, on Interstate 15 in Salt Lake City, under quasi-static cyclic loads by Pantelides et al. [6, 7]. The RC bridge was built in 1963 and did not possess the necessary reinforcement details for ductile performance. The tests included an as-built bent, a bent rehabilitated with carbon FRP composite jackets, and a damaged bent repaired with epoxy injection and carbon FRP composite jackets.

FRP composites are suited for seismic retrofit. The low weight, high strength, and ease of application make these materials unique candidates for seismic retrofit. Seible and Priestley [8] reported that in the 1994 Northridge earthquake all bridge structures in the region of strong ground motion, that were retrofitted since the 1989 Loma Prieta earthquake, performed adequately without damage requiring repairs. It was demonstrated from assessment analyses, performed on six bridges that collapsed due to column failure, that collapse could have been prevented if existing retrofit technology had been implemented before the 1994 Northridge earthquake.

In 2000, three reinforced concrete bents on the southbound lanes of the South Temple Bridge, on Interstate 15 were tested in Salt Lake City. Two bents were tested with a RC grade beam retrofit, and one bent with the RC grade beam retrofit as well as a carbon FRP composite seismic retrofit. This paper presents the experimental findings regarding the FRP retrofitted bridge bent and recommendations for the seismic retrofit design of bridge T-joints using FRP jackets.

BRIDGE DESCRIPTION

In 2000, two of the bridge bents tested on the southbound South Temple Bridge were: (a) Bent #5 on the southbound lanes, denoted as Bent #5S, which included the grade beam retrofit but no FRP composite jackets; the bent was tested with one-half the original gravity load, since the deck was left in place between Bent #5S and Bent #6S; and (b) Bent #6S which included the grade beam and the carbon FRP composite seismic retrofit with half the original gravity load, and is the focus of the present paper. In the 1998 tests, Bent #5 on the northbound lanes, denoted as Bent #5N, was tested without a grade beam or FRP composite retrofit, and Bent #6N was tested without a grade beam but with an FRP composite retrofit.

Superstructure

All of the bridge bents tested in 1998 and 2000 had approximately identical as-built details. The superstructure consisted of three columns, a bent cap, eight steel girders, and the deck. The 7.34-m high columns were 0.914 m square, while the bent cap was 19.66 m long, 0.914 m wide, and 1.219 m high, tapering to 0.914 m from the exterior columns to the ends, as shown in Fig. 1. Each column had sixteen 32 mm reinforcing bars around its perimeter extending from the top of the pile cap to within 310 mm of the bent cap top fiber, as shown in Fig. 2(b). The transverse reinforcement consisted of 13 mm single hoops starting at 152 mm from the base of the column and spaced at 305 mm up to the bent cap bottom,

as shown in Fig. 2. At the base of each column, there were 16 dowels 32 mm in diameter with lap splices extending 0.762 m (24 bar diameters) above the pile cap, as shown in Fig. 2(b).
The bent cap flexural reinforcement consisted of 32 mm and 16 mm bars; for transverse reinforcement, 16 mm double stirrups were used, as shown in Fig. 2(b) at the variable spacing of Fig. 2(a). There were no vertical stirrups or horizontal hoops present in the bent cap-column joints. The concrete cover was 51 mm in the bent cap and 89 mm in the columns.

As-Built Foundation

The three columns were supported on reinforced concrete pile caps. The two exterior caps measured 2.13 m square and 0.914 m thick; they were supported on four cylindrical concrete filled steel piles, 0.305 m in diameter and approximately 18.30 m deep. The interior cap was 2.74 m square, 0.914 m thick, and was supported on five piles. Connecting each pile cap was a 0.46 m square concrete strut reinforced with four 25 mm bars with 13 mm stirrups spaced at 457 mm, as shown in Figs. 1 and 2(a). The exterior pile caps were each reinforced by a row of sixteen 22 mm bars perpendicular to the plane of the bent, and a row of twelve 22 mm bars parallel to it. This reinforcement was located 0.61 m below the top of the pile cap. The interior pile cap was reinforced similarly except that the parallel row had sixteen 22 mm bars, as shown in Fig. 2(a). There was no transverse reinforcement in the pile caps.

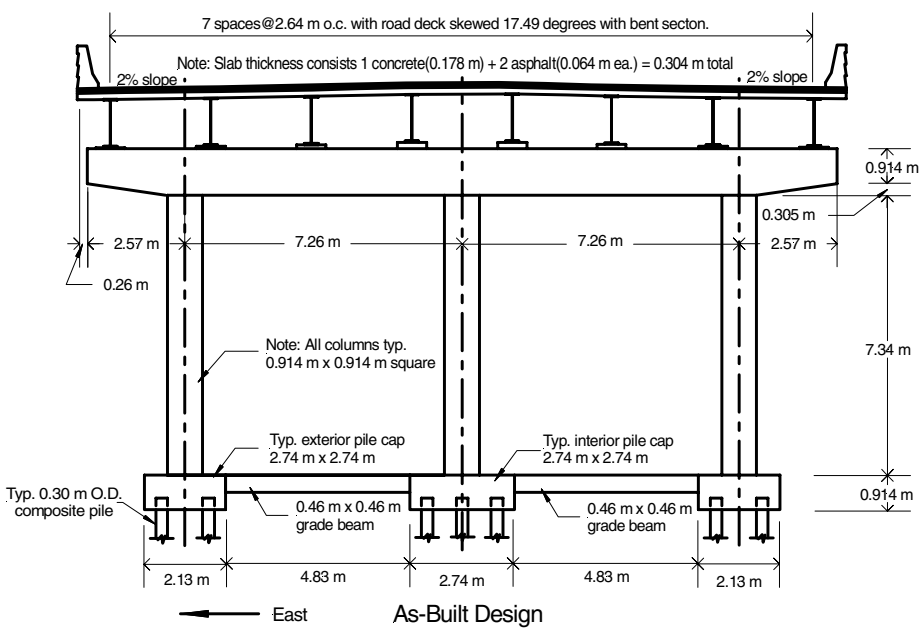

Figure 1. Typical bent structure for both the 1998 and 2000 bridge tests.

COMPARISON WITH AASHTO AND ACI REQUIREMENTS

The bridge reinforcement details were compared to the AASHTO [9] requirements for seismic zones 3 and 4. The existing columns had a steel ratio of 1.6%, which satisfied the requirement that the steel ratio should be between 1% and 6% for longitudinal column steel. AASHTO requires that column transverse reinforcement for confinement be provided at a maximum of 100 mm for the top and bottom 1.20 m column length, which was violated; in addition, the cross-sectional area of the transverse reinforcement was only 43% of the area required. Lap splices are permitted only within the center half of the column height and the splice length can not be less than 60 bar diameters; in the present case, the splice was in the

plastic hinge region at the column base and the splice length was only 24 bar diameters; the requirement for spacing of transverse reinforcement in the splice region of 100 mm was violated since the tie spacing was 305 mm. The column hoops violated the AASHTO requirements of a closed tie with 135-degree hooks having a 75 mm extension at each end. The development length of the longitudinal steel into the bent cap required by AASHTO is 881 mm, and this was met since the column steel extended 909 mm into the bent cap; however, the existing details violate the requirement which calls for column transverse reinforcement extending a distance of 380 mm from the face of the column connection into the adjoining members, since no transverse reinforcement was provided in the bent cap-column joints.

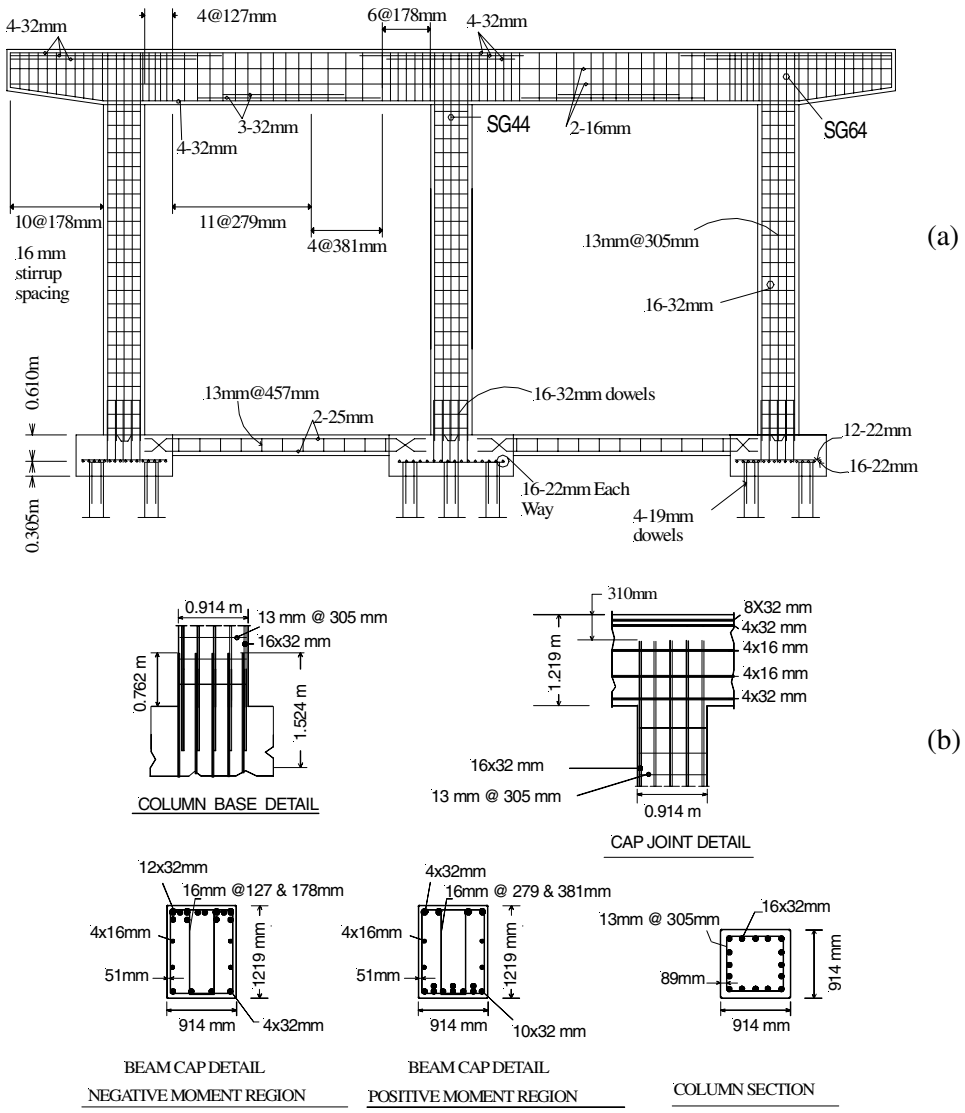

Figure 2. Reinforcement for the 1998 and 2000 bridge tests: (a) longitudinal, (b) cross-sections.

The ACI Committee 318 report [10] states that the bent cap positive moment capacity at the joint face should not be less than one-half the negative moment strength provided at the face of the joint. In the present case, the ratio of positive to negative moment strength was 0.35, which violates the design stipulation.

SEISMIC RETROFIT OF BRIDGE BENT

For the existing structure, the steel had a yield stress of 326 MPa or 1.21 times the design value, and the grade beam steel had a yield stress of 469 MPa. Four 102 mm x 204 mm cores from the existing bridge bent had an average concrete compressive strength of 33 MPa or 1.23 times the design strength; the compressive strength of the grade beam concrete was 34 MPa.

Foundation Seismic Retrofit

The performance-based goal of the seismic retrofit was to increase the displacement ductility of the bridge bent; thus it was necessary to develop a higher base shear and moment capacity than the existing foundation and pile cap system could provide. As part of the foundation retrofit, a reinforced concrete grade beam was implemented, as shown in Fig. 3(a), which connected the three pile caps together; this completed the tension and compression load path, it allowed the pile caps to displace uniformly, and it increased the shear and flexural capacity of the foundation. The longitudinal reinforcement consisted of twelve 25 mm bars along the top, and two groups of three 25 mm bars along the bottom between the pile caps, as shown in Fig. 3. The shear reinforcement was 10 mm stirrups spaced at 152 mm over the pile caps and for a distance of 0.610 m beyond the pile caps, at a spacing of 406 mm along the two spans.

The 305-mm diameter concrete-filled steel piles were embedded into the 0.914-m thick pile cap a distance of 0.305 m, as shown in Fig. 3(b). The piles were connected to the pile cap with four 19 mm bars extending 0.305 m into the pile cap. For the expected ultimate lateral load, the steel area and anchorage length would have been insufficient to resist pullout failure of the piles, as was shown from a pushover analysis by Duffin [11]. A 38-mm hole was cored through the pile cap into the pile for a distance of 2.44 m, and the pile was anchored to the pile cap using a 32 mm Dywidag bar epoxied into the hole. This detail was implemented for the four corner piles of each pile cap.

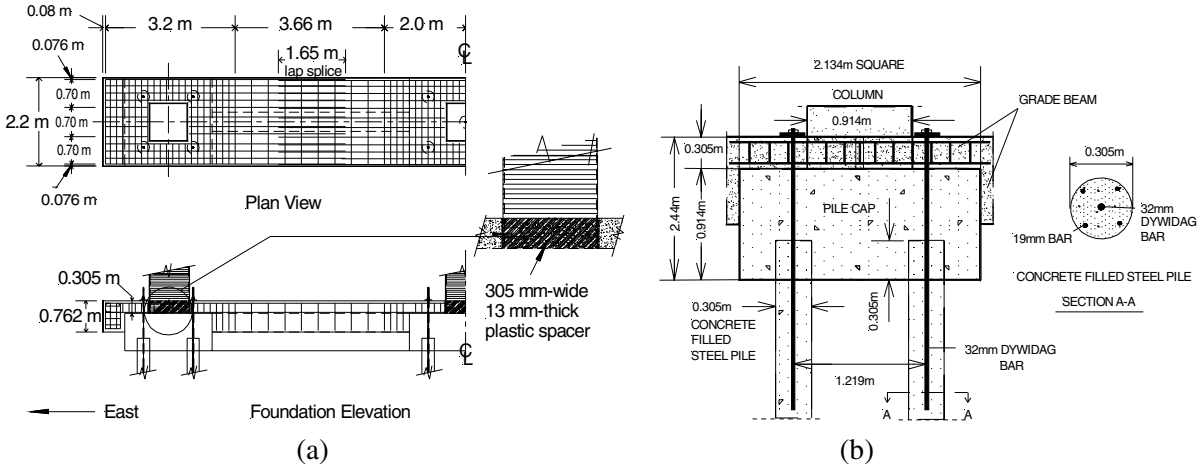

Figure 3. Grade beam retrofit: (a) plan and longitudinal section, (b) grade beam-to-pile connection.

Superstructure Seismic Retrofit

The superstructure was retrofitted with carbon FRP composites with the goal of increasing the displacement ductility of the as-is bridge bent. The actual FRP composite application on Bent #6 is shown in Fig. 4. The FRP composite properties, composed of carbon fabric fibers with epoxy resin were obtained from tensile coupons manufactured on-site and tested per ASTM D3039 [12]. Each layer of FRP

composite was 1 mm thick. The average tensile strength of the FRP composite, which had a fiber volume of 25%, was 720 MPa, the average modulus of elasticity was 70 GPa, and the average ultimate tensile strain was 9 mm/m.

The design of the FRP composite for the columns, ankle wrap, and shear stirrups followed the criteria established by Pantelides and Gergely [13]. The present application for the southbound bents of the South Temple Bridge was different in two aspects: first, FRP composite sheets were applied along the bent cap, with unidirectional fibers in the direction of the bent cap axis, covering the full depth of the bent cap on two faces in the bent cap-column joints of the east and middle columns; and secondly in the design and the details of the FRP U-straps which consist of FRP composite sheets starting on the north face of the column going over the bent cap and ending on the south side of the column with unidirectional fibers in the direction of the column axis.

Figure 4 shows that the bottom of each column had an identical pattern of FRP jacket designed for the following criteria: (1) flexural hinge confinement, (2) lap splice clamping, and (3) shear strengthening; a

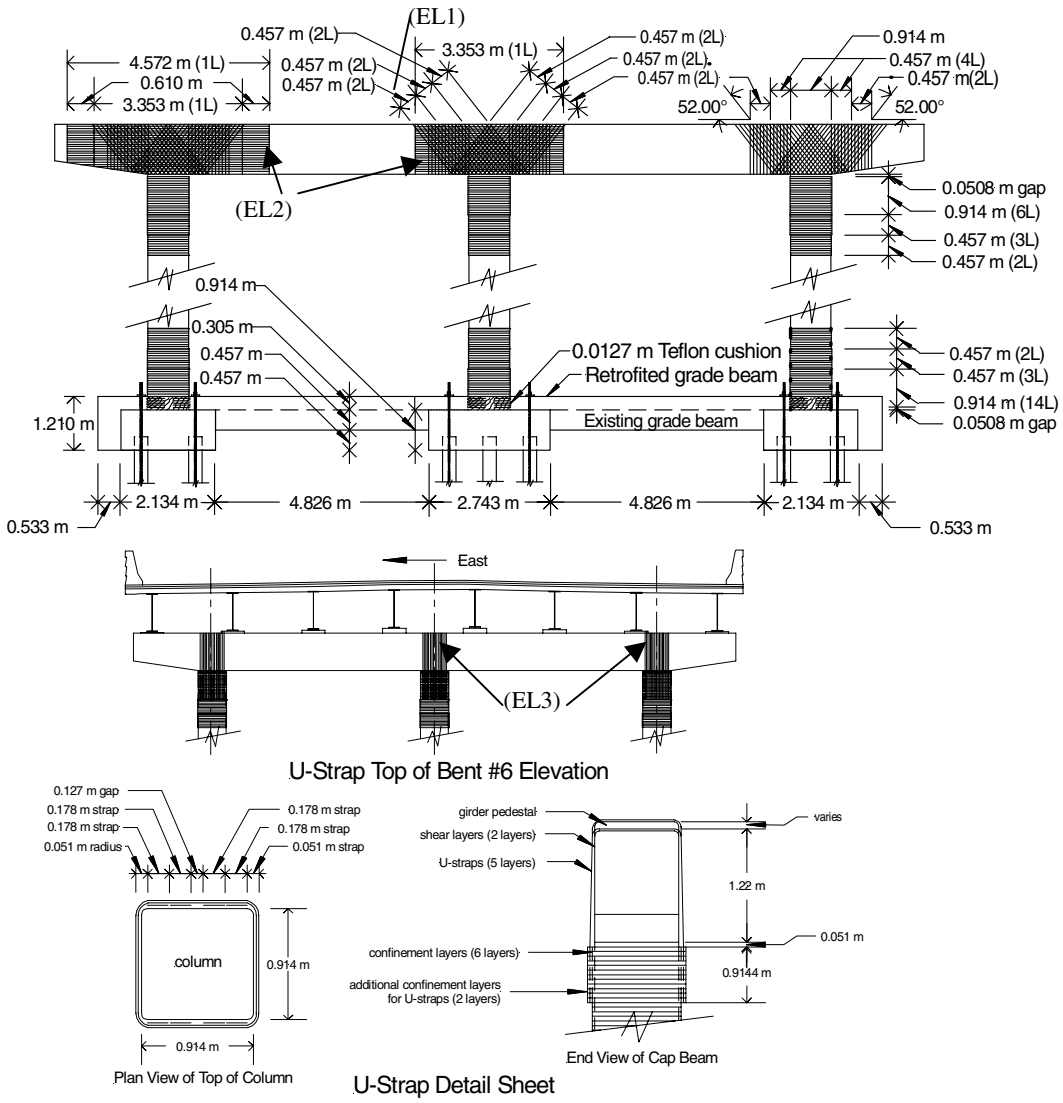

Figure 4. CFRP composite retrofit design of Bent #6-2000 test (xL = no. of Layers).

50 mm gap was left above the pile cap, after which 14 layers of FRP composite extended 914 mm, followed by three layers for an additional 457 mm and finally another two layers for 457 mm. The RC grade beam was built after the FRP composite was applied, so a 13-mm thick plastic spacer was used to separate the FRP jacket from the grade beam concrete, as shown in Fig. 3(a). The three column tops were retrofitted with FRP jackets for flexural hinge confinement and shear strengthening; a 50 mm gap was left below the soffit of the bent cap, after which six layers of FRP composite extended 914 mm, followed by three layers for 457 mm and another two layers for 457 mm, as shown in Fig. 4.

Seismic Retrofit Design of Bridge T-joints using FRP Jackets

FRP composite jackets in the bent cap-column joints were provided consisting of three elements as shown in Fig. 4: (EL1) ankle wrap FRP composite sheets for resisting diagonal tension which were applied at 52 degrees from the horizontal, (EL2) FRP composite strips with unidirectional fibers in the direction of the bent cap axis for shear and flexural strengthening, and (EL3) FRP composite U-straps clamped at the column faces going over the bent cap, whose purpose was to anchor the longitudinal column steel bars terminating 310 mm from the top of the bent cap, as shown in Fig. 2(b); these bars had insufficient anchorage details and are known to pull out from the concrete in the joint at low drift ratios as shown by Park et al. [14].

The FRP reinforcement for element EL1 consisted of two layers at ± 52° from the horizontal on both faces of the bent cap, as shown in Fig. 4. The FRP reinforcement for element EL2 for the east bent cap-column joint were two sheets, one 1.219 m wide and 4.572 m long sheet on both faces of the bent cap in the bent cap axis direction, and one 1.219 m wide and 3.353 m long sheet; for the middle bent cap-column joint there was only one 1.219 m wide and 3.353 m long sheet on both faces, as shown in Fig. 4; there was no EL2 FRP reinforcement for the west bent cap-column joint. The FRP reinforcement for element EL3 was identical for each column, consisting of five continuous layers of two 356 mm-wide U-straps per column; the FRP U-straps were applied at one face of the column 914 mm below the bent cap soffit up the bent cap and down the other face for the same length, as shown in Fig. 4; these FRP U-straps were clamped by two additional 914 mm wide FRP jackets around the column.

An additional element was applied on the bent cap at 90° to the bent cap axis near the joints, for additional confinement and shear strengthening of the bent cap near the columns; these layers went 360° around the bent cap and consisted of four FRP layers for the first 457 mm on both sides of the column, and two layers for 457 mm beyond the first layers, as shown in Fig. 4. A wet layup process was used to apply the carbon FRP composite on Bent #6S, using a saturating machine, which ensured consistent fiber impregnation with resin.

The FRP composite design along the bent cap axis (element EL2 in Fig. 4) and a revised design of the FRP composite U-straps (element EL3 in Fig. 4) are described here; a more detailed development can be found elsewhere [11]. The bending moment, axial loads, and shear forces, for each bent cap-column joint, were determined form a static pushover nonlinear analysis using program DRAIN-2DX [15]. The internal forces obtained from the DRAIN-2DX model at the peak lateral load were applied to joint faces and checked for static equilibrium. The vertical and horizontal joint internal shear stresses were obtained by dividing the joint vertical and horizontal internal shear forces by their respective face area, thus establishing the final conditions for plane stress for the bent cap-column joints, as shown in Fig. 5. Subsequently, the principal tensile stresses and principal directions were determined for the bent cap-column joints. The principal tensile stresses are used to determine the required number of FRP layers for EL1 (ankle wrap FRP composite sheets).

The design for element EL2 (FRP composite fibers parallel to bent cap axis) and EL3 (FRP composite U-straps), as shown in Fig. 4, follows the method proposed by Duffin [11]. The bending moment demand found from the DRAIN-2DX analysis, M_D, is resisted by the moment capacity of the beam contributed by tensile and compressive steel, M_S, and the moment capacity contributed by the FRP composite, ΔM_C.

$$M_D = M_S + \Delta M_C \tag{1}$$

Equation (1) is valid at any bent cap section such as Drawing 1, 2, or 4 in Fig. 5, or a column section, such as Drawing 3 in Fig. 5. The moment capacity contributed by tensile and compressive steel, M_S, is obtained using standard expressions from reinforced concrete design. The additional moment capacity contributed by the required layers of FRP composite, ΔM_C, is obtained by reference to Fig. 6 as ([Duffin 11]):

$$\Delta M_C = \left(\sigma_C - \frac{T_C}{A_C} \right) \frac{I_C}{c_y} \tag{2}$$

where σ_C = tensile stress in the FRP composite (720 MPa for the FRP U-straps EL3, but only 20% of this value for the FRP composite layers parallel to the bent cap axis, EL2, because these layers debond prematurely from the concrete), T_C = axial tensile force in the composite, A_C = cross-sectional area of FRP composite in tension, I_C = moment of inertia of FRP composite in tension, and c_y = distance between neutral axis and extreme FRP fiber in tension. Figure 6 shows application of Eq. (2) for the (EL3) FRP composite U-straps; the same equation applies for the (EL2) FRP composite strips with unidirectional fibers in the bent cap.

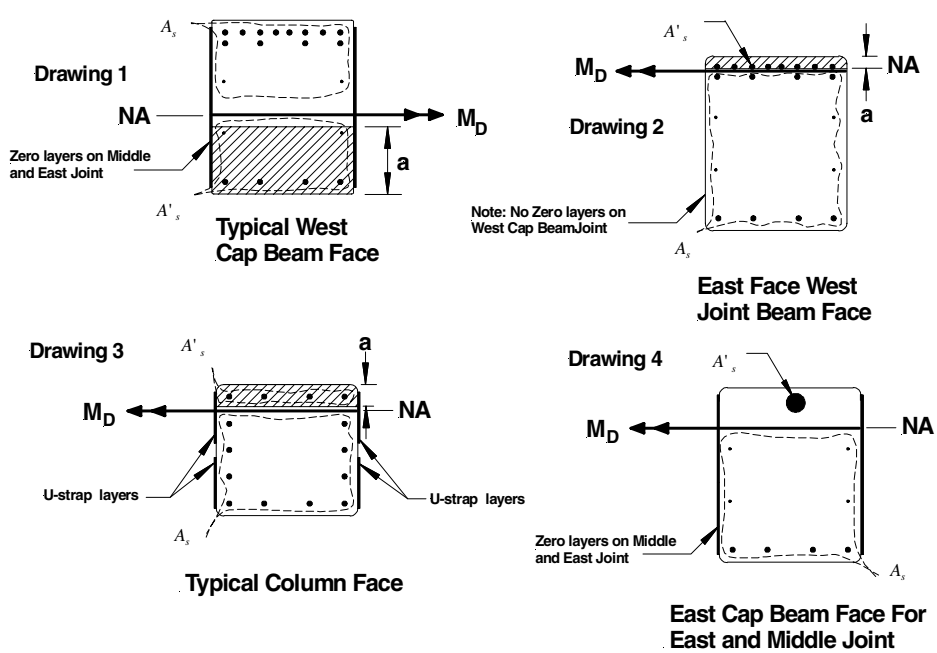

Figure 5. Moment demands on the bent cap-column joints for Bent #6-2000.

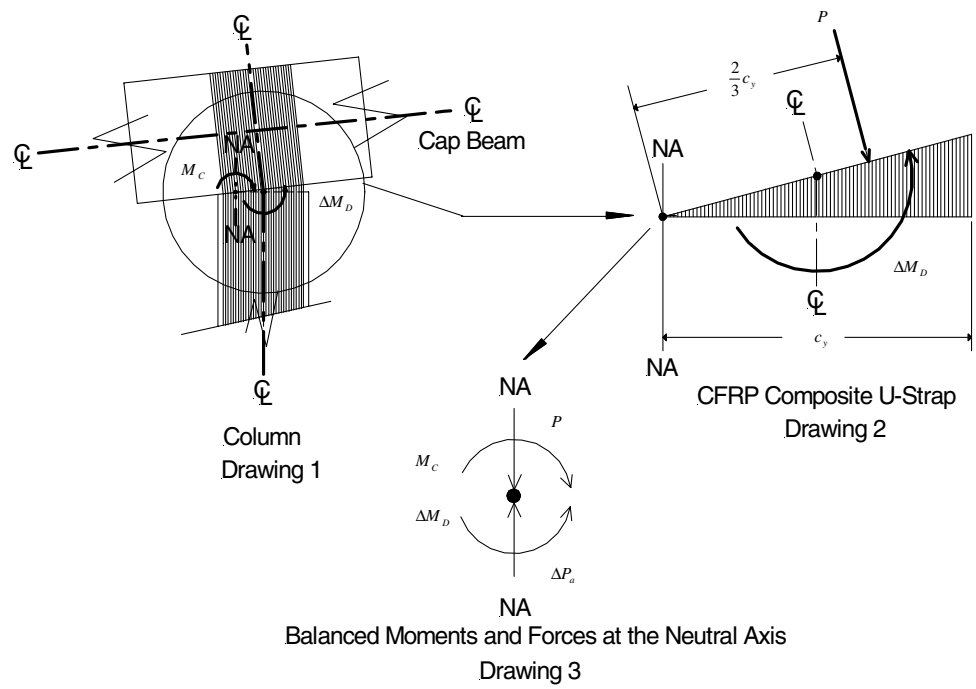

Figure 6. Equilibrium conditions for the additional moment and force from FRP U-Strap.

EXPERIMENTAL INVESTIGATION

Bent #6S was tested using a quasi-static cyclic lateral load applied at the bent cap centerline using a 2700 kN hydraulic actuator mounted at the top of a steel load frame, as shown in Fig. 7. Each cycle was repeated three times, the test was displacement controlled, and was terminated when the load dropped 47% from the peak lateral load. The steel frame sat upon two foundations, as shown in Fig. 7, both of which were supported by geopiers, which are a form of stone columns. The actuator was connected to a steel yoke, which provided a flat surface to distribute the pressure evenly across the surface of the bent cap end in the push mode, as shown in Fig. 7. On the opposite end, there was a similar yoke, joined to the first by twenty 13 mm-diameter prestressing steel cables, which provided the tension for pulling the bent; the cables were prestressed only to take out the sag and did not increase the bent capacity. The deck span (21.87 m) between Bent #5S and Bent #6S and the eight steel plate girders supporting it provided the gravity load.

The hysteresis of the force-displacement behavior of the structure for the system, including both the superstructure and the grade beam is shown in Fig. 8; even though the behavior was asymmetric, the retrofitted bent dissipated a large amount of energy and reached a drift ratio of 6.8%. The performance of Bent #6S is characterized by three performance levels as noted in Fig. 8: (I) Rupture of FRP U-straps at the east and west bent cap-column joints, as shown in Fig. 9(a) for the east bent-cap column joint; (II) Longitudinal column steel pullout at the east and west bent cap-column joints, as shown in Fig. 9(b) for the west bent-cap column joint; and (III) Longitudinal column steel lap splice failure at the base of the three columns, as shown in Fig. 10.

Damage was observed on the bent cap near the west bent cap-column joint. A flexure/shear crack formed starting at the top of the bent cap, 1.73 m east of the west column, as shown in Fig. 11; this is the end point of the four 32mm negative moment steel bars, as shown in Figs. 2(a) and 11. From onsite

observations, the crack started as a flexural crack at 4.0% drift, continued to develop diagonally and had completely developed at a drift of 6%, reaching a crack width of 1.3 mm. The crack occurred because of the high negative moment and insufficient tensile steel and stirrups; there were no FRP composite layers parallel to the bent cap axis as provided for the east and middle columns shown in Fig. 4. This crack shows the importance of FRP composite element (EL2) in the bent cap-column joint retrofit, the FRP composite strips in the direction of the bent cap axis for shear and flexural strengthening.

Comparison with previous tests

The displacement ductility of Bent #6S was found as 5.76, for Bent #5S as 3.50, and for Bent #6N from the 1998 test as 4.64. A comparison was made to the Bent #5N test, which was tested by Pantelides et al. [7] in the as-is condition and had no RC grade beam or FRP composite retrofit. The load vs. drift behavior for Bent #5N is compared to that of Bent #5S and Bent #6S in Fig. 12. As expected, Bent #5N had the least lateral load capacity, and smallest displacement ductility at 2.8; Bent #6S with the grade beam retrofit and the FRP composite retrofit had the best performance and 2.06 times the displacement ductility of Bent #5N; this shows that the seismic retrofit satisfied the displacement-based retrofit design performance goal of increasing the displacement ductility.

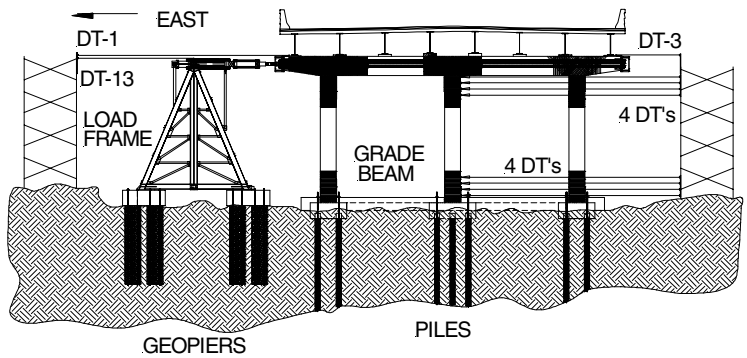

Figure 7. Loading and horizontal displacement transducers.

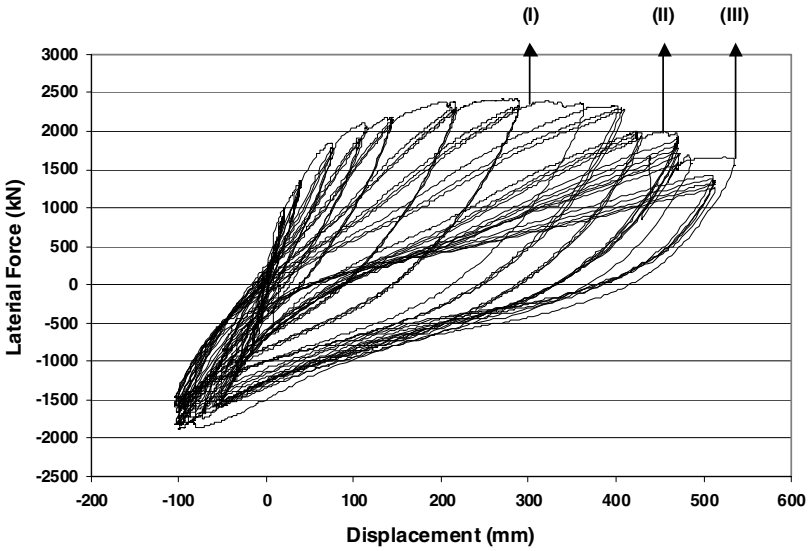

Figure 8. Bent #6-2000 hysteretic behavior: (I) 4% Drift, (II) 5.5% Drift, and (III) 6.8% Drift.

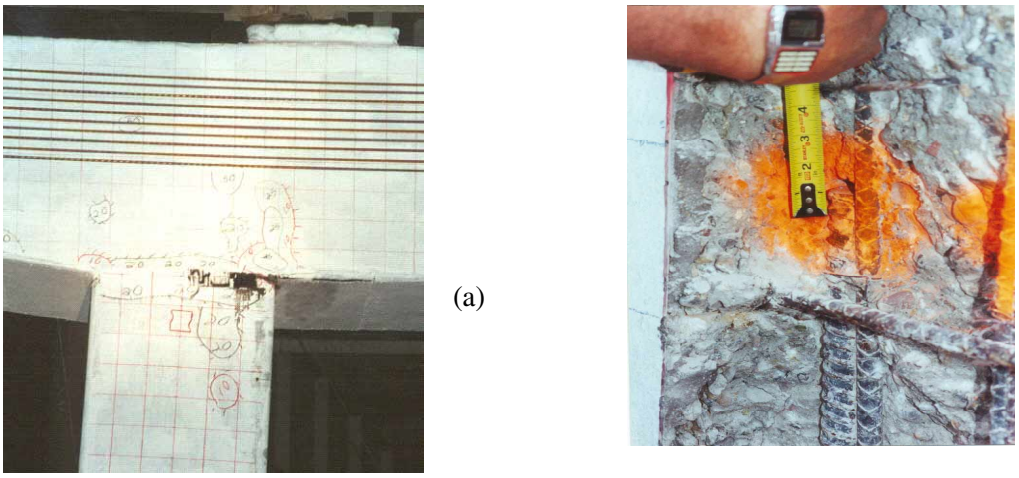

(a) (b)

Figure 9. Performance levels: (a) Level (I) east bent cap-column FRP U-Strap failure at 4.0% drift ratio; (b) Level (II) debonding of west bent-cap column steel showing 16 mm gap.

Figure 10. Level (III): Lap splice failure at column bases and single curvature shape at 6.8% drift.

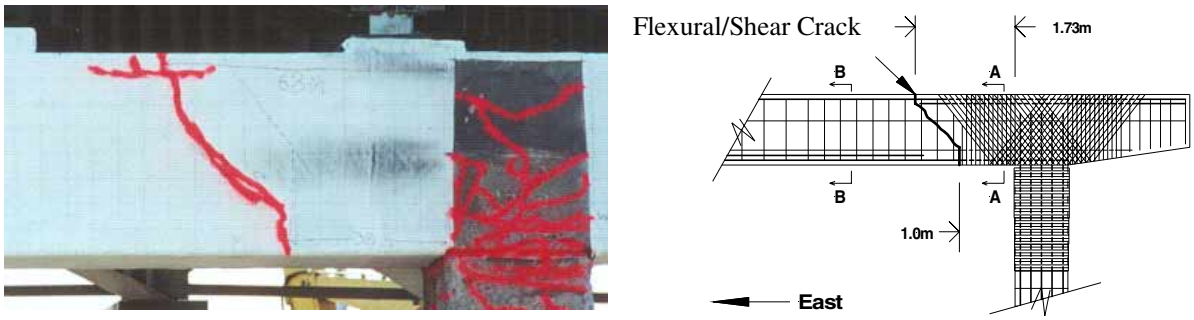

Figure 11. Cracked bent cap east of west column at 6% drift.

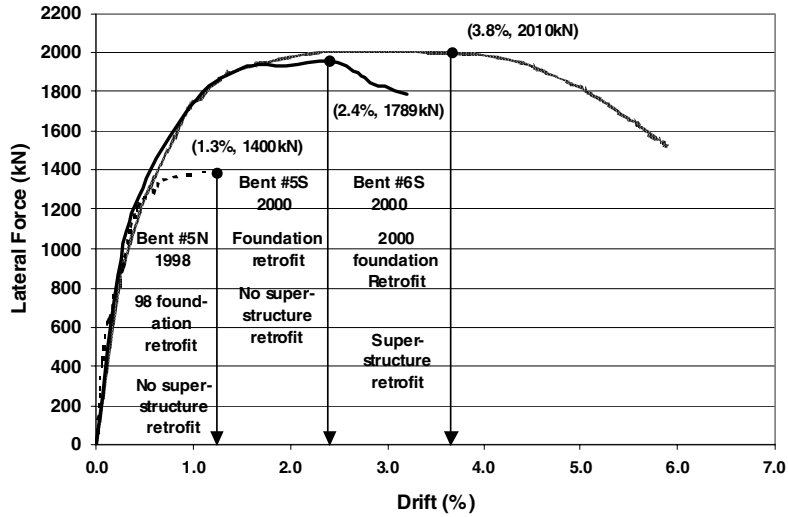

Figure 12. Performance comparisons: Bent #5N-1998, Bent #5S-2000, and Bent #6S-2000.

CONCLUSIONS

In-situ experiments of multicolumn bridge bents demonstrated that an external carbon FRP composite seismic retrofit combined with a RC grade beam retrofit of the foundation, can improve the seismic performance of RC bridges with inadequate seismic details and is an alternative to replacement. The retrofit strengthened the column lap splices in three ways: (a) FRP confinement layers provided additional clamping capacity, (b) FRP layers provided additional flexural stiffness to the lap splice and the plastic hinge was transferred above the lap splice elevation, and (c) the increased grade-beam retrofit elevation to 305mm above the existing pile cap provided additional shear capacity, flexural stiffness, and confinement. Because of the increased fixity, the base moment demands were transferred more efficiently into the pile-foundation system.

New design guidelines are presented for the design of FRP composite layers parallel to the bents cap axis and FRP composite U-straps. The FRP composite layers parallel to the bent cap axis contributed additional tensile capacity to the bent cap-column joints; near the west column where these layers were omitted a flexural-shear crack occurred in the bent cap. The FRP composite U-straps acted as external anchorage, and allowed the longitudinal column steel to yield and remain bonded to the concrete up to a drift ratio of 4%, at which the maximum lateral load capacity of the bridge bent was reached. The performance of the bent was characterized by three events: (I) fixed column ends in double curvature up to a drift ratio of 4%, at which the FRP U-straps ruptured, (II) the exterior columns formed plastic hinges at the bottom and were pinned at the top, and the middle column developed plastic hinges at both ends at a drift ratio of 5.5%; and (III) the lap splices started to fail after a drift ratio of 5.5%, the three columns developed gaps at the bottom, and a mechanism was formed at a 6.8% drift ratio; at the end of the test, the lateral load dropped 47% from its peak value.

ACKNOWLEDMENTS

This work was supported by the Federal Highway Administration, and the Utah Department of Transportation. The authors acknowledge the assistance of Scott Isaac of Sika Corporation and Dr. Larry Cercone of Navlight Composites.

REFERENCES

1. Zelinski, R. "Northridge earthquake influence on bridge design code." ACI International, 1999, Seismic Response of Concrete Bridges, K. Krishnan, Editor, Farmington Hills, MI, SP 187-2: 17-28.

2. Taylor, A.W. "Performance of reinforced concrete bridges in January 1995 Hyogoken Nanbu (Kobe) earthquake." ACI International, 1999, Seismic Response of Concrete Bridges, K. Krishnan, Editor, Farmington Hills, MI, SP 187-4: 57-67.

3. Seible, F., Priestley, M.J.N., Hegemier, G., and Innamorato, D. "Seismic retrofitting of RC columns with continuous carbon fiber jackets." J. Composites for Construction, 1997, 1(2): 52-62.

4. Seible, F., Innamorato, D., Baumgartner, J., Karbhari, V., and Sheng, L.H. "Seismic retrofit of flexural bridge spandrel columns using fiber reinforced polymer composite jackets." American Concrete Institute, 1999, Report SP-188-78, FRPRCS-4, Farmington Hills, MI, 919-931.

5. Gamble, W.L., and Hawkins, N.M. "Seismic retrofitting of bridge pier columns." *Proc. Struct. Congress XIV*, 1996, ASCE, Reston, VA., Vol. 1: 16-23.

6. Pantelides, C.P., Gergely, J., Reaveley, L.D., and Volnyy, V.A. "Retrofit of RC bridge pier with CFRP advanced composites." *J. Structural Engineering,* 1999, 125(10): 1094-1099.

7. Pantelides, C.P., Gergely, J., and Reaveley, L.D. "In-situ verification of rehabilitation and repair of reinforced concrete bridge bents under simulated seismic loads." *Earthq. Spectra*, 2001, 17(3): 507-530.

8. Seible, F., and Priestley, M.J.N. "Lessons learned from bridge performance during the Northridge earthquake." ACI International, 1999, Seismic Response of Concrete Bridges, K. Krishnan, Editor, Farmington Hills, Michigan, SP 187-3: 29-55.

9. American Association of State Highway and Transportation Officials, Inc. (AASHTO), "Standard Specifications for Highway Bridges." 2nd Ed., 1998, Washington, D.C.

10. ACI Committee 318. "Building Code Requirements for Structural Concrete (ACI 318-02) and Commentary (ACI 316R-02)." American Concrete Institute, 2002, Farmington Hills, MI.

11. Duffin, J.B. "Design of FRP jackets for seismic strengthening of bridges and experimental verification." M.Sc. Thesis, 2003, Dept. of Civil & Env. Eng., Univ. of Utah, Salt Lake City, UT.

12. American Society for Testing Materials. "ASTM D 3039. Standard Test Method for Tensile Properties of Polymer Matrix Composite Materials." ASTM, 1996, D3039/D 3039 M-95a, West Conshohocken, PA.

13. Pantelides, C.P., and Gergely, J. "Carbon-fiber-reinforced polymer seismic retrofit of RC bridge bent: Design and in situ validation." *J. of Composites for Construction,* 2002, 6(1): 52-60.

14. Park, R., Rodriguez, M.E., and Decker, D.R. "Assessment and retrofit of a reinforced concrete bridge pier for seismic resistance." *Earthq. Spectra*, 1993, 9(4): 781-801.

15. Prakash, V., Powell, G.H., and Campbell, S. "DRAIN-2DX Base Program Description and User Guide." *Report No.* UCB/SEMM-93/17, 1993, Dept. Civil Eng., Univ. California, Berkeley, CA.