13th World Conference on Earthquake Engineering
Vancouver, B.C., Canada
August 1-6, 2004
Paper No. 3041

THE PSEUDO DYNAMIC TEST OF RC BRIDGE COLUMNS ANALYZED THROUGH THE HILBERT-HUANG TRANSFORM

Yeou-Fong Li[1], Shuenn-Yih Chang[1], Wen-Ching Tzeng[1], Kang Huang[2]

SUMMARY

In this paper, the analysis of the responses of the pseudo dynamic test of a rectangular reinforced concrete (RC) bridge column using the Hilbert-Huang transform (HHT) is introduced. Firstly, a 40%-scaled rectangular RC bridge column is subjected to the pseudo dynamic test. The input of the pseudo dynamic test is set as the near-fault ground accelerations of the Chi-Chi Earthquake, which happened in 1999 in central Taiwan. After damage occurs to the bridge column, we use non-shrinkage mortar to repair the column, and then use 3 layers of CFRP to rehabilitate its plastic zone. The rehabilitated bridge column is again tested. Then we use the HHT to analyze the responses of the as-built and rehabilitated bridge columns. We can observe from the Hilbert spectrum of the bridge columns that, at the instant when the frequency changes, the structural behavior changes from elastic to inelastic. The HHT can therefore be used to obtain the instantaneous natural frequencies of the bridge columns and to understand the relationship between the frequency changes and stiffness condition of the bridge columns.

INTRODUCTION

To obtain the structural response of bridge columns under earthquake input in the laboratory, the shaking table experiment and the cyclic loading test are two of the most popular techniques. Most of the shaking table experiments cannot carry large-scale or heavy structure specimens due to their limitations in the size and the loading capacity. Hence, reduced scale experiments are done in most shaking table experiments, and the size effect has become a very important issue. Also, the cyclic loading test cannot realistically describe the structural behavior under earthquake input. Recently, pseudo dynamic test has become a very popular experimental technique, because it can concur the problems of the shaking table and the cyclic loading tests mentioned above. The structural responses obtained from the pseudo dynamic tests can furthermore be more realistic. The pseudo dynamic test is carried out with a 40%-scaled rectangular RC bridge column; the input of the tests is set as the near-fault ground accelerations of the Chi-Chi Earthquake to obtain the displacement-time responses of the columns.

The Hilbert-Huang Transform was developed by Huang et al. (Huang et al., 1998) to analyze non-linear and non-stationary signals [1]. The HHT can transfer the displacement-time response into the instantaneous frequency response, and the spectrum is a function of both frequency and time. Therefore,

[1] National Taipei University of Technology, Taipei 106, Taiwan, R.O.C.
[2] Big Sky Engineering Consultants, Taipei, 106, Taiwan, R.O.C.

we can obtain the instantaneous structural behaviors, such as during the in-elastic and damage stages, from the HHT spectrum. HHT has been applied to the analyzing the earthquake record from the Chi-Chi earthquake, Taiwan, collected during the 21st of September in 1999 [2], and the analyzing dynamic and earthquake motion recordings in the studies of seismology and engineering [3].

In this paper, two identical reinforced concrete bridge columns with a reduced scale of 40% are tested at the National Center of Research for Earthquake Engineering (NCREE). The design of the specimen is based on the 1995 version of the Taiwan bridge design code [4]. Then the specimens are tested using the pseudo dynamic method. For the input of the pseudo dynamic test, we use the near-fault ground acceleration time history as to simulate the earthquake. After the test, we repair the bridge column using three layers of CFRP composite material and then we test it again. Finally, we use the responses of the test as the input of the HHT to obtain the Hilbert spectra. Information of the structural behavior with respect to time can be evaluated by the Hilbert spectrum.

THE HILBERT-HUANG TRANSFORM

The Hilbert-Huang Transform belongs to the "Empirical mode decomposition" (EMD) method. It can decompose any complicated data set into a finite number of "Intrinsic mode functions" (IMFs) to perform the Hilbert transform. With the Hilbert transform, the IMFs yield instantaneous frequencies as a function of time that gives sharp identifications of structural behaviors. The final presentation form is the energy-frequency-time distribution, named "Hilbert spectrum" [1]. We can understand the structural behaviors under the earthquake loading from the variations of the instantaneous frequency response. In this section, the Hilbert transform, EMD, and IMF will be introduced in details.

Empirical mode decomposition method

The EMD method was invented by Huang et al. [1] to obtain the instantaneous frequency response of a time signal $X(t)$. At any given time instant, a signal can consist of many oscillating components, which produce non-single valued frequencies. The signal may be decomposed into a series of IMFs. The EMD procedure is represented as three steps:

(1) First, identify all the local extrema. Connect all the local maxima and minima by cubic spline curves to produce the upper and lower envelopes, respectively. We then subtract the average of the upper and lower envelopes from the original signal $X(t)$ and obtain a new signal. Next we repeat the procedure on the new signal till it satisfies the above conditions for IMF, which results in the first IMF $c_1(t)$. Finally, we subtract $c_1(t)$ from the original signal and obtain the residue $R_1(t)$.

$$X(t) - c_1(t) = R_1(t) \tag{1}$$

(2) After repeating the procedure of Step 1 on $R_1(t)$, the second IMF $c_2(t)$ is obtained.

$$R_1(t) - c_2(t) = R_2(t) \tag{2}$$

(3) Now we repeat the procedure of Step 2 until the residual signal $R_n(t)$ becomes a monotonic function from which no more IMFs can be extracted or the residual amplitude becomes smaller than the specified value. Finally, the original signal can be expressed as follows:

$$X(t) = \sum_{j=1}^{n} c_j(t) + R_n(t) \tag{3}$$

Thus, we decompose the data into *n*-empirical modes, and a residue, $R_n(t)$.

The Hilbert Spectral Analysis

For a given data, *D(t)*, the Hilbert-Huang transform provides a method to define imaginary *Y(t)*, which is the convolution of *D(t)* with *1/t*. The Hilbert transform of a time signal *D(t)* is denoted as *Y(t)* and defined as follows [5]:

$$Y(t) = \frac{1}{\pi} PV \int_{-\infty}^{\infty} \frac{D(\tau)}{t-\tau} d\tau \tag{4}$$

where "P*V*" denotes the Cauchy principal value. With the definition, *D(t)* and *Y(t)* can be combined to form an analytical signal *Z(t)*, which is given as follows:

$$Z(t) = D(t) + iY(t) = a(t)e^{i\theta(t)} \tag{5}$$

where time-dependent amplitude *a(t)* and phase $\theta(t)$ are expressed as

$$a(t) = \sqrt{D^2(t) + Y^2(t)} \tag{6}$$

$$\theta(t) = \tan^{-1} \frac{Y(t)}{D(t)} \tag{7}$$

By applying the Hilbert transform to each IMF component, the original signal *X(t)* in Eq. (3) can be expressed in the following form:

$$X(t) = \Re \sum_{j=1}^{n} a_j(t) e^{i\int \omega_j(t)dt} \tag{8}$$

where $\Re$ is the real part of the value, and $a_j(t)$ is the analytic signal associated with the *j*th IMF. Then we can compute the instantaneous frequency of each IMF component according to the following equation:

$$\omega_j(t) = \frac{d\theta_j(t)}{dt} \tag{9}$$

where $\omega_j(t)$ is the instantaneous frequency of the *j*th IMF [1, 6, 7].

PSEUDO DYNAMIC TEST

Although many analytical techniques can be used to obtain the seismic response of a bridge column subject to an earthquake loading, the accuracy is highly dependent upon the mathematical model of the stress-strain or load-displacement relations used in the nonlinear dynamic analysis. However, it is a very difficult task to reliably modeling the relationship since it involves strength and stiffness degradation, and pinching in the hysteretic loop for a reinforced concrete member. The pseudo dynamic testing method [8, 9] is a promising method to reliably obtain the seismic responses of structures.

The pseudo dynamic testing is almost the same as the use of a step-by-step integration method to compute the displacement response time history of a test structure except that no stress-strain or load-displacement relations are involved. In fact, after using a finite element procedure to construct the equations of motion, a step-by-step integration method is required to solve these equations in performing a pseudo dynamic test. In this procedure, inertial and damping properties in the equations of motion are analytically described while the restoring forces are experimentally measured. The use of measured restoring force instead of analytical computed restoring force is intentionally to overcome the difficulty arising from an accurate mathematically modeling the stress-strain or load-displacement relationships for nonlinear structures.

FABRICATION OF THE RECTANGULAR BRIDGE COLUMN

In this paper, a 40%-scale RC rectangular bridge column was designed and tested at the National Center for Research on Earthquake Engineering (NCREE) of Taiwan. The as-built design and rehabilitated design of the bridge column is introduced below.

Design Details of the Rectangular Column

The height of the bridge column is 325 *cm*, which is measured from the bottom to the center of the applied horizontal force, and the rectangular cross section of the column is 75×60 *cm*. To simulate two-lane traffic of the superstructures, we use 68 *tf* for the vertical load. The design is based on the 1995 version of the Taiwan bridge design code [4]. The design detail of the test column is shown in Figure 1 and Table 1.

Rehabilitation Design of the Rectangular Bridge Column

After the pseudo dynamic test, the column is moderately damaged. Firstly, we use non-shrinkage mortar to repair the damaged sections, and then 3 layers of CFRP to rehabilitate the plastic zone of the bridge columns. In this paper, we use the design equations of ATC-32 [11] to calculate the thickness and the number of layers of CFRP composite material. After calculation, Column A and B need to be rehabilitated by using three layers of CFRP in the plastic zone, and 1 layer in the non-plastic zone. The mechanical properties of CFRP composite material are listed in Table 2.

EXPERIMENTAL PROGRAMS

The side view configurations of the experimental setup are shown in Figure 2. The bridge column is fixed on the strong floor, and the horizontal actuator is mounted on the reaction wall. The measurement systems are placed in proper position to measure the required information during the experiment.

Experimental Setup

The rectangular RC bridge column is simulated as a single degree of freedom system to perform a pseudo dynamic test. The vertical load is loaded through a pair of pretension rods during the test, and the vertical actuator is embedded at the bottom of the strong floor at NCREE. The lateral force is applied at the top of the bridge column using a displacement control servo-hydraulic actuator (maximum force equaling 961 *kN*, and maximum displacement equaling 50 *cm*) to perform a pseudo dynamic test with constant axial load. The imposed horizontal displacement will cause the pretension rods to introduce a horizontal component force. Therefore the lateral force correction is necessary in this experiment [12].

Experimental Procedures

Many near-fault ground motion data were recorded during the Chi-Chi earthquake in 1999 in Taiwan. The ground acceleration of TCU102 is plotted in Fig. 3. The ground acceleration of the near fault named

TCU102 with PGA=0.7 g is applied to the bridge column. After the column has been damaged, the column is repaired and then rehabilitated by using 3 layers of CFRP in the plastic zone and 1 layer in the non-plastic zone. Then, we use the same ground acceleration to retest the columns under the same vertical loading and pseudo dynamic test procedures.

Pseudo dynamic Test Results

In this section, the hysteretic loop results of as-built and rehabilitated RC columns after pseudo dynamic test are introduced. The maximum lateral forces and the corresponding lateral displacements of the as-built and rehabilitated columns are listed in Table 3.

(1) As-built Column

The axial force applied to the bridge column is 667 *kN* (to simulate 4-lane traffic), and the system is subjected to the ground acceleration record of TCU102 with a peak ground acceleration of 0.7 *g*, as shown in Fig. 3. Figure 4 is the displacement-time history response and the hysteretic loop of the pseudo dynamic test result of as-built column. The pseudo dynamic test is stopped at time 16.25 *sec*, and the maximum displacement at the top of column is 250 *mm*, which is the maximum stroke of the actuator, and the corresponding drift ratio is 7.6 %, as shown in Fig. 4. In the meantime, the concrete cover has been severely spalled and some longitudinal steel bars have been yielded at the bottom of the column. The severe stiffness degradation and large energy dissipation are observed during the time interval of $14 \le t \le 15$ *sec*. As seen in Fig. 3, there is a very significant pulse-like wave striking the bridge column, and the column cannot survive the pulse-like wave. As seen in Fig. 4, the hysteretic loops reveal that a well-designed RC bridge column might not fully develop its energy dissipation capacity due to very intensive near-fault ground motion. The maximum force is 553 *kN* when displacement equals 13.83 *cm*.

(2) Rehabilitated Column

After rehabilitated column has been damaged under the pseudo dynamic test, we use non-shrinkage mortar and CFRP to repair and rehabilitate the bridge column. The column after rehabilitation is also subjected to the ground acceleration record of TCU102 with a peak ground acceleration of 0.7 *g*. Figure 5 is the hysteretic loop of the pseudo dynamic test result of the rehabilitated column. The pseudo dynamic test is stopped at time 16.25 *sec*, and the maximum displacement at the top of the rehabilitated column is 250 *mm* (in the negative direction), and the corresponding drift ratio is 7.6 %, as shown in Fig. 5. As seen from Fig. 5, the maximum lateral force is 487 *kN*, and the maximum displacement at the top of rehabilitated column is 250 *mm*, which is the maximum stroke of the actuator.

THE HHT ANALYSIS RESULTS

As we know, the first mode of the natural frequency of bridge columns is proportional to the square root of the stiffness. If we know the exact time instant of the decreasing of the frequency, then we can understand the damage condition or nonlinear behavior of bridge column. The purpose of this paper is to understand the structural behaviors of bridge columns under the near-fault ground acceleration by observing the Hilbert spectrum of the structural responses. The HHT applied to the responses of the pseudo dynamic test of the rectangular RC bridge column under the as-built and rehabilitated conditions are discussed in this section.

(1) As-built Column

As seen from Fig. 4, the displacement response is very large after the time instant of 14 *sec*. Figure 6 is the seven IMF components of the displacement-time history response of the as-build column. Figure 7 is the Hilbert spectra of the as-build column, and they show that the spectral density becomes larger at the frequency range between 0.5 to 1.8 Hz, and after the time instant of 14 *sec*. It shows that the stiffness of the bridge column starts to decrease rapidly after the time instant of 14 *sec*, due to the very large near-

fault ground impulse. The maximum horizontal displacement on the top of the as-build column reaches 250 *mm*, which is the maximum horizontal displacement of the actuator. Figure 8 is the marginal spectrum, which is the averaging spectrum with respect to time. As seen from Fig. 8, the frequency response is widely spread within the time interval 0.5~1.8 Hz. It shows that the damage of the as-build column is severe because the decreasing of the stiffness is obvious.

(2) Rehabilitated Column

As seen from Fig. 5, the displacement response becomes larger after the time instant of 11 *sec*. Figure 9 is the seven IMF components of the displacement-time history response of the rehabilitated column. Figure 10 is the Hilbert spectra of the rehabilitated column, and it shows that the spectral density becomes larger at the frequency range between 0.6 to 1.8 Hz, and after the time instant of 12 *sec*. This shows that the stiffness of the bridge column starts to decrease rapidly after the time instant of 12 *sec*, due also to the very large near-fault ground impulse. The concrete has been spalled inside the CFRP jacket after the pseudo dynamic test. Figure 11 is the marginal spectrum of the rehabilitated column. As seen in Fig. 11, the dominant frequency response is within 0.6~1.8 Hz. It shows that the damage of the rehabilitated column is severe because the decreasing of the stiffness is obvious.

CONCLUDING REMARKS

After analyzing the responses of the pseudo dynamic tests of the rectangular reinforced concrete bridge columns through the HHT, we conclude that:

(1) The pseudo dynamic test results show that the lateral displacement of as-build and rehabilitated columns reach the maximum displacement of the actuator right after the shock of the near-fault ground acceleration. This is because a very significant pulse-like wave strikes the bridge column, and the column cannot survive from the pulse-like wave.

(2) The HHT can be used to obtain the instantaneous natural frequencies of the bridge columns and to understand the relationship between the frequency changes and the stiffness condition of the bridge columns.

(3) We can conclude that the more wide spread the distribution of the spectrum, the more severe the damage of the column. The wide spread distribution of the marginal spectrum happens because of the decreasing of the stiffness of the column.

(4) For analyzing non-stationary signals, the HHT can provide the information of the frequency changes with respect to time, while the FFT cannot.

ACKNOWLEDGEMENTS

This work has been funded by the National Science Council of the Taiwanese government, under contract No. NSC 89-2625-Z-027-002. The experimental work was carried out by the colleagues in NCREE, whose assistance is greatly appreciated.

REFERENCES

1. Huang, N. E., Shen, Z., Long, S. R., Wu, M.-C., Shih, H.-H., Zheng, Q., Yen, N.-C., Tung, C.-C. and Liu, H.-H., The Empirical Mode Decomposition and the Hilbert Spectrum for Nonlinear and Non-stationary Time Series Analysis, R. Sec. London A, The Royal Society, pp. 903-995 (1998).

2. Huang, N. E., Chern, C. C., Huang, K., Salvino, L. W., Long, S. R., and Fan, K. L., A New Spectral Representation of Earthquake Data: Hilbert Spectral Analysis of Station TCU129, Chi-Chi, Taiwan, 21 September 1999, Bulletin of the Seismological Society of America, Vol. 91, No. 5, pp. 1310-1338 (2001).

3. Zhang, R. R., Ma, S., Safak, E, and Hartzell, S., Hilbert-Huang Transform Analysis of Dynamic and Earthquake Motion Recordings, Journal of Engineering Mechanics, Vol. 129, No. 8, pp. 861-875 (2003).

4. Ministry of Transportation and Communication (1995), Seismic Design Code of Highway Bridge, You-Shih Publishing Inc. (in Chinese).

5. Bendat, J. S. and Piersol, A. G., Random Data, 2nd ed., Wiley (1991).

6. Huang, N. E., The Empirical Mode Decomposition and The Hilbert Spectrum for Nonlinear and Non-stationary Time Series Analysis, NASA, U.S.A. (manuscript) (1996).

7. Huang, N. E. and Shen, Z., Manual for Hilbert Spectral Analysis Programs, National Aeronautics and Space Administration (1997).

8. Takanashi, K., Udagawa, K., Seki, M., Okada, T. and Tanaka, H., Nonlinear Earthquake Response Analysis of Structures by a Computer-actuator On-line System, Bulletin of Earthquake Resistant Structure Research Center, 8, Institute of Industrial Science, University of Tokyo, Tokyo, Japan (1975).

9. Shing, P. B., and Mahin, S. A., Pseudodynamic Method for Seismic Performance Testing: Theory and Implementation, UCB/EERC-84/01, Earthquake Engineering Research Center, University of California, Berkeley, CA, U.S.A. (1984).

10. Newmark, N. M., Method of Computation for Structural Dynamics, Journal of Engineering Mechanics Division, ASCE, Vol. 85, pp. 67-94 (1959).

11. Improved Seismic Design Criteria for California Bridges: Provisional Recommendations, ATC-32, Applied Technology Council, Redwood City, California, U.S.A. (1996).

12. Chang, S.-Y., Y.-F. Li, and C.-H. Loh, Experimental Study of Seismic Behaviors of As-built and CFRP Retrofitted Reinforced Concrete Bridge Columns, Journal of Bridge Engineering, ASCE, Accepted (2003).

13. Li, Y.-F., Huang, K., Ho, Y., and Tzeng, W.-C., The Ambient Vibration Test of Bridge Column by Using Hilbert-Huang Transform, Journal of the Chinese Institute of Civil and Hydraulic Engineering, Vol. 15, No. 1, pp. 21-33 (2003). (in Chinese)

Table 1 The design details of the bridge columns

Section shape	Rectangular
Height (*m*)	3.25
Section (*cm*)	75 ×60
Concrete cover (*cm*)	2.5
Axial force (*tf*)	68
Longitudinal steel reinforcement	32#6
Longitudinal steel ratio (ρ)	0.0195
Transverse steel reinforcement (stirrup)	#3
Transverse steel ratio (ρ)	0.0104
Hoop angle of stirrup	135°
Spacing (cm)	10
Failure mode	Flexural failure
No. of layer of CFRP	Plastic zone (3 layers) Non-plastic zone (1 layer)

*Plastic zone = 0~80 cm (measured from footing)

Table 2 The material mechanical properties of CFRP

Material Specification	FAW 250 (g/m^2)
Young's Modulus, Ecf (*MPa*)	2.32×10^5
Tensile Strength (*MPa*)	4.17×10^3
Thickness (mm/layer)	0.1375
Ultimate Strain	0.018

Table 3 The maximum lateral displacement and the force of the bridge columns

Column	Axial force	Max. displacement (mm)	Max. force (kN)
As-built	68	250	553
Rehabilitated		250	487

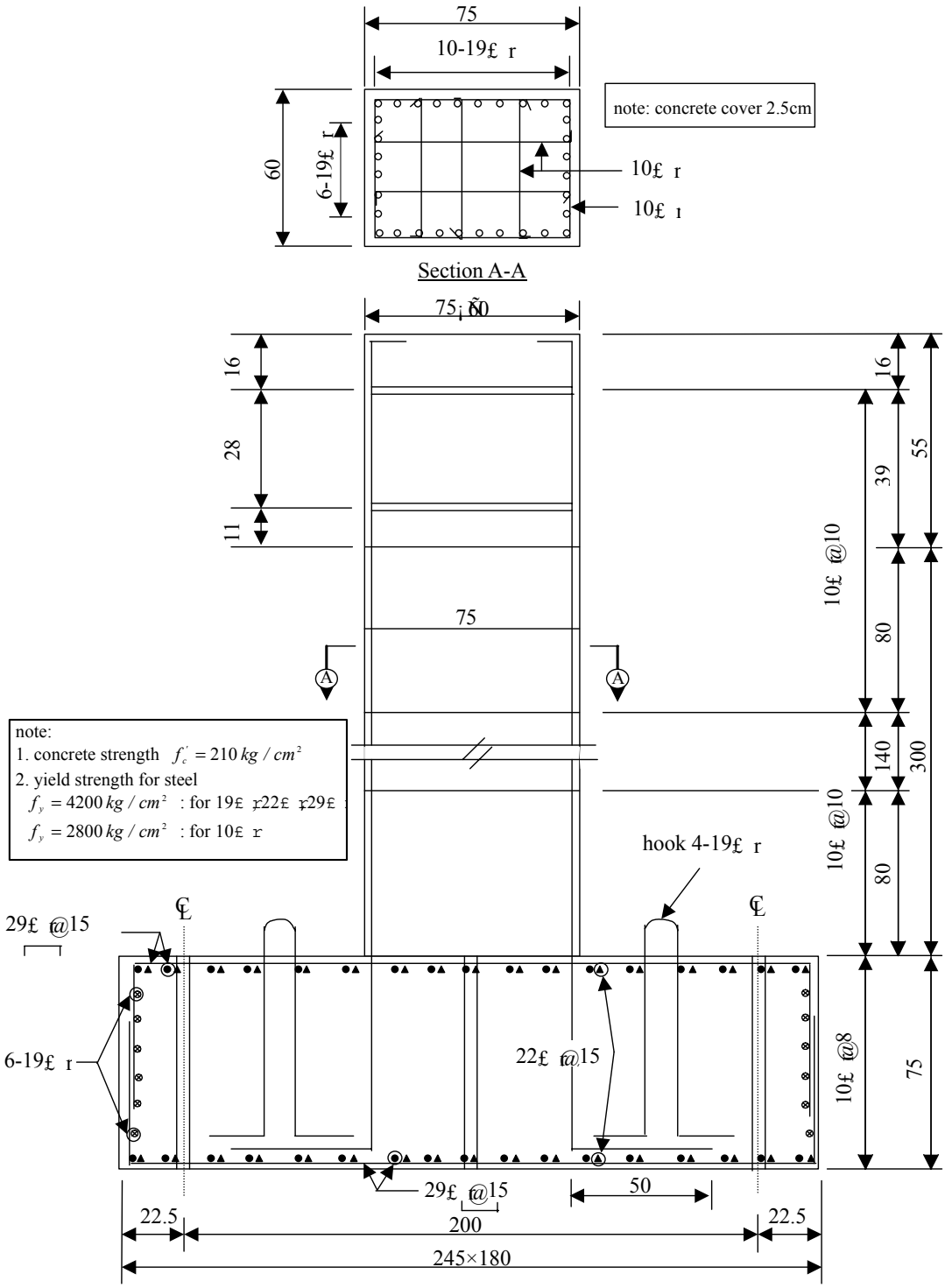

Fig. 1 The design details of rectangular RC bridge column

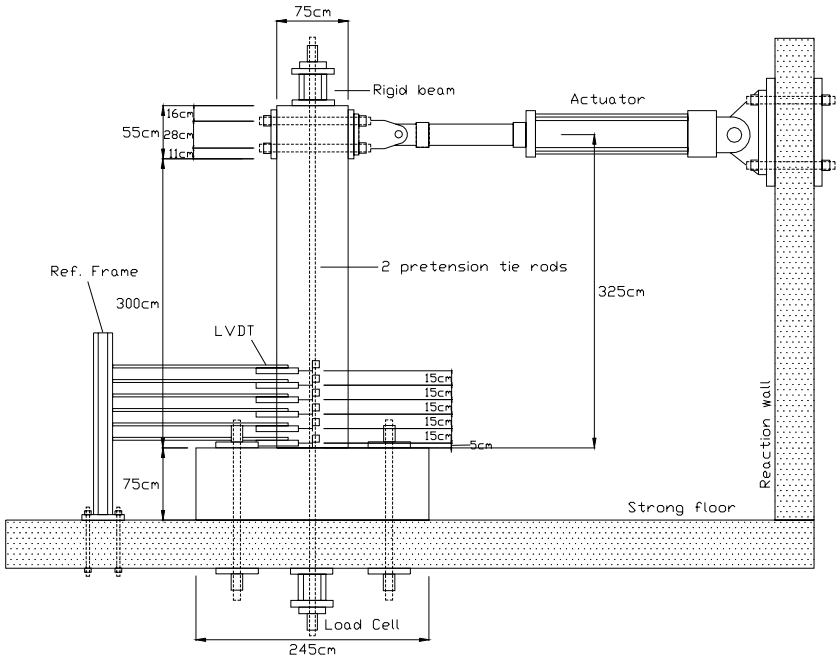

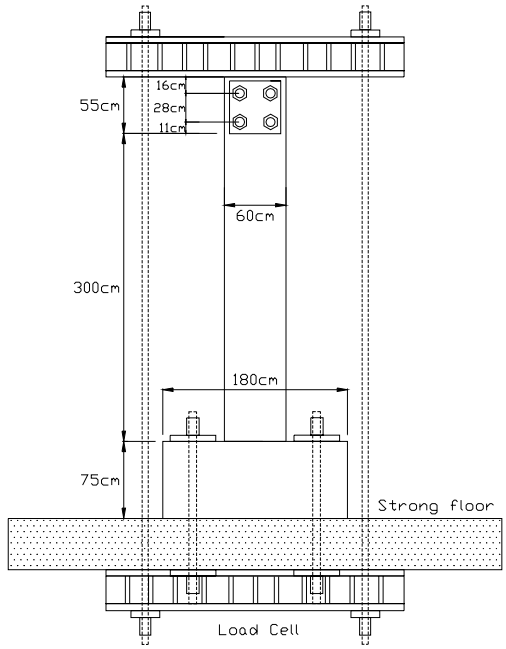

Fig. 2 The two side views of the experimental setup

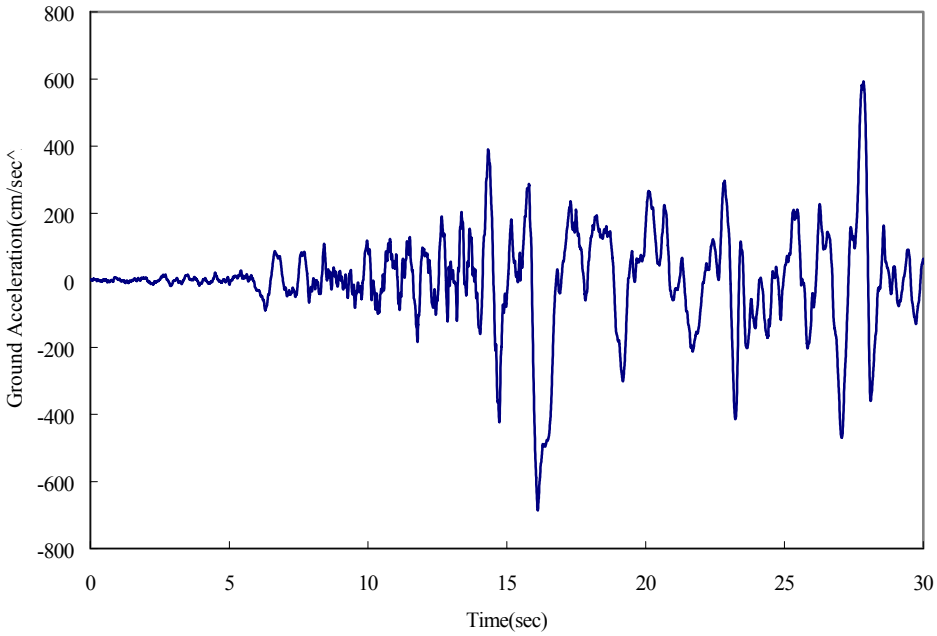

Fig. 3 The ground accelerations of TCU102 at Chi-Chi Earthquake (PGA=0.7 *g*)

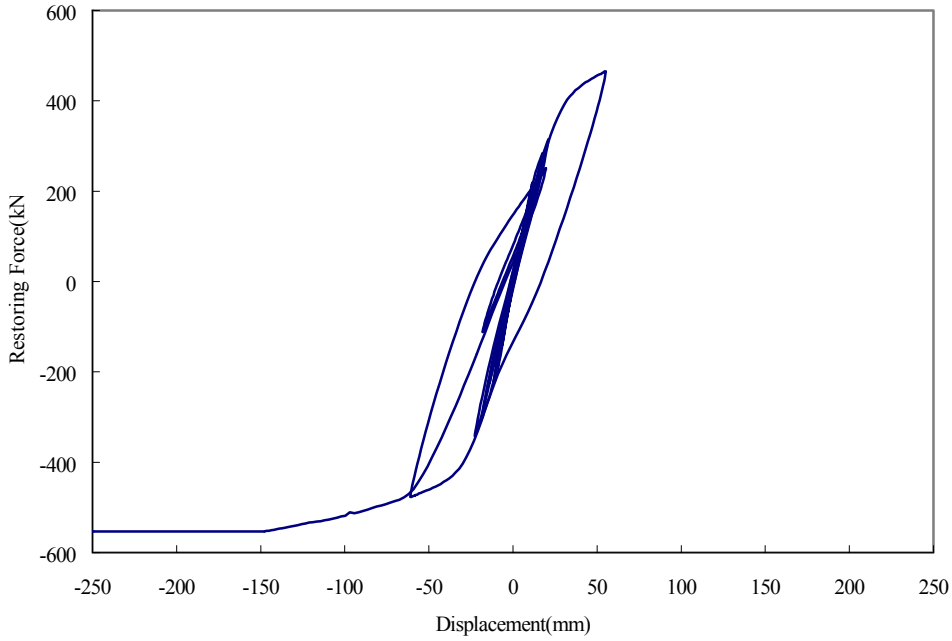

Fig. 4 The hysteretic loop of the pseudo dynamic test of the as-built column

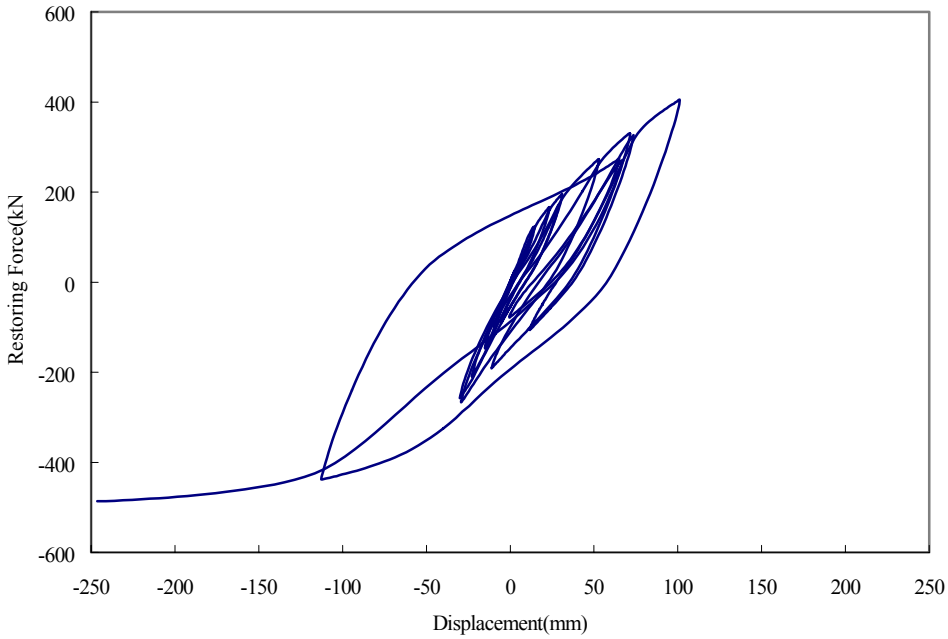

Fig. 5 The hysteretic loop of the pseudo dynamic test of the rehabilitated column

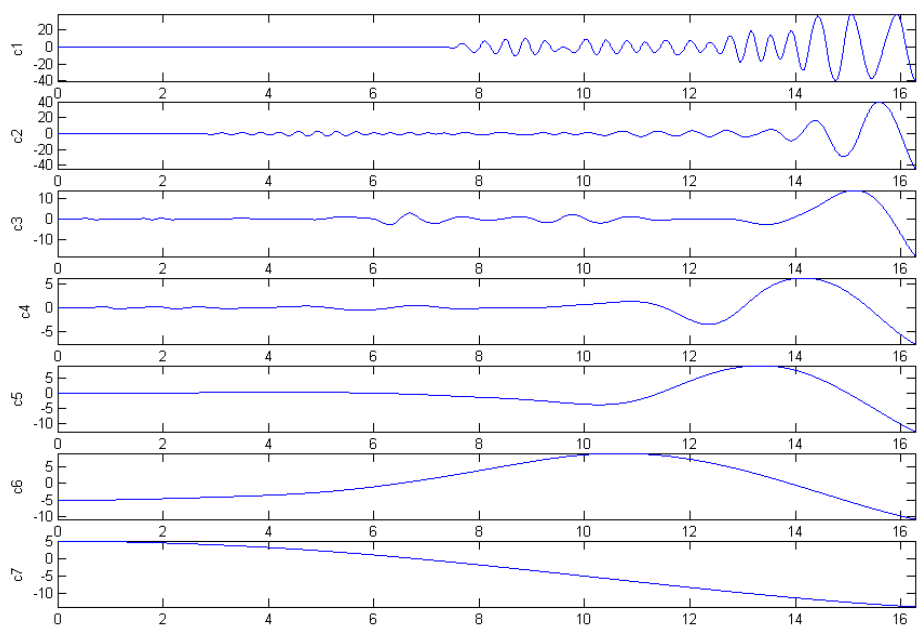

Fig. 6 The IMF components of the displacement-time history response of the as-built column

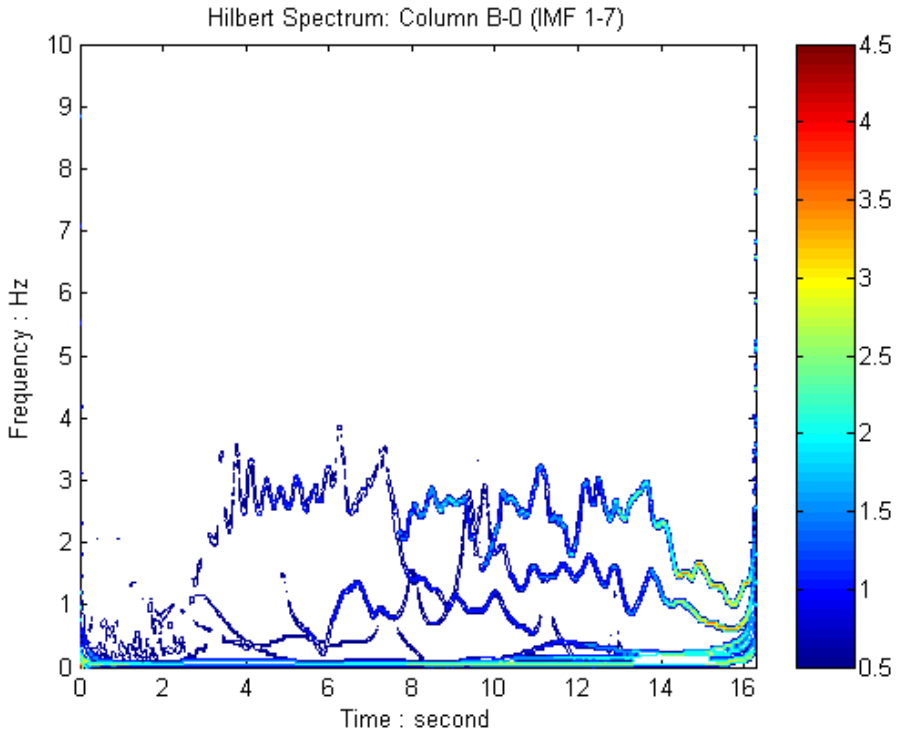

Fig. 7 The Hilbert spectrum of the as-built column (*t*=0¡ã16.25 *sec*)

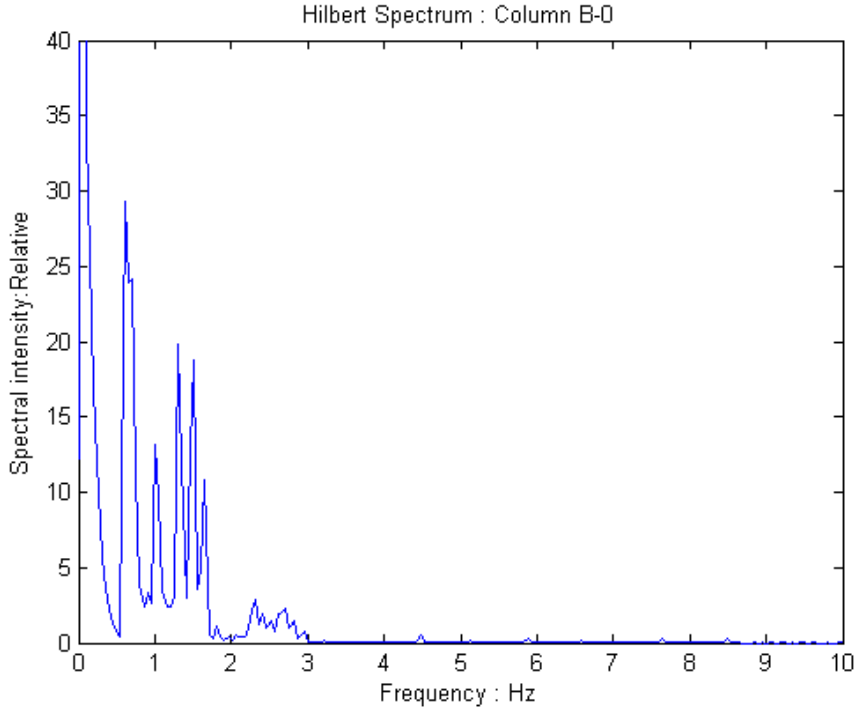

Fig. 8 The marginal spectrum of the as-built column

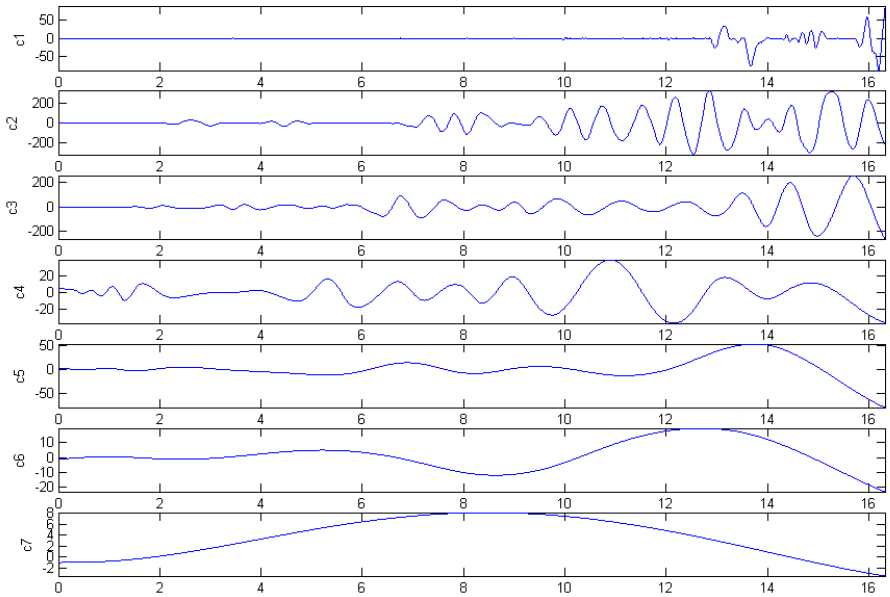

Fig. 9 The IMF components of the displacement-time history response of rehabilitated column

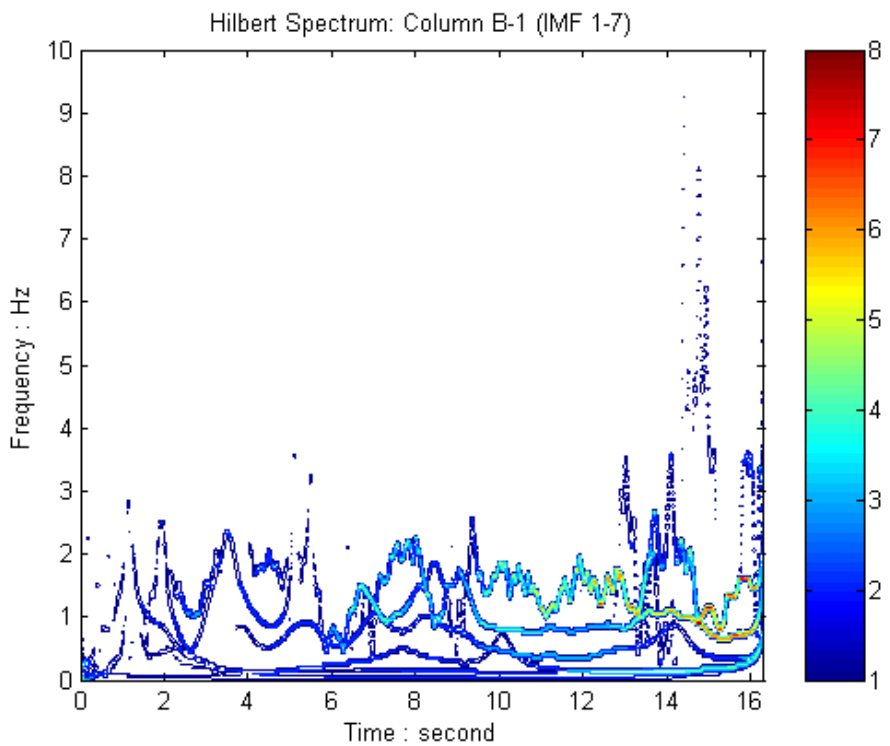

Fig. 10 The Hilbert spectrum of the rehabilitated column (*t*=0¡ã16.25 *sec*)

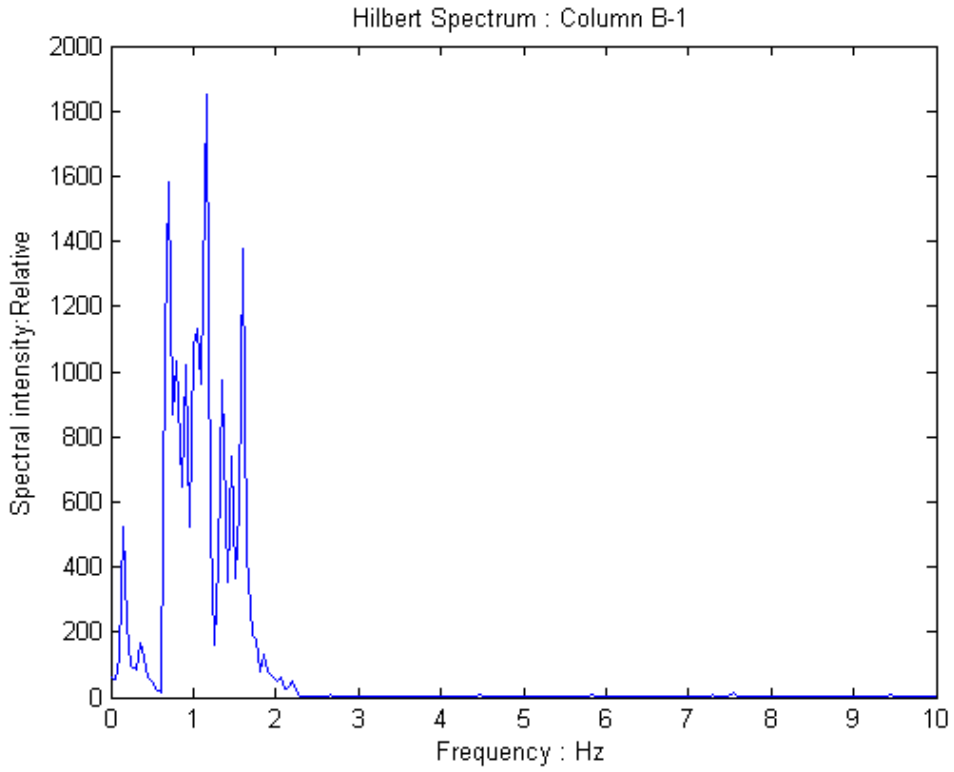

Fig. 11 The marginal spectrum of the rehabilitated column