13th World Conference on Earthquake Engineering
Vancouver, B.C., Canada
August 1-6, 2004
Paper No. 3025

ENERGY DISSIPATION AND PE RFORMANCE BASED DESIGN FOR THE RETROFIT OF A PRE-NORTHRIDGE STEEL MOMENT FRAME STRUCTURE – A CASE STUDY

Ravi KANITKAR[1], Omar WAQFI[2], Colin BLANEY[3]

SUMMARY

The performance of steel moment frame structures has been extensively reviewed since the 1994 Northridge earthquake. The SAC Joint Venture investigated the unexpectedly poor performance of the moment connections and developed the FEMA 350[1] and 351[2] documents as guidelines for the design of new moment connections as well as for the evaluation and retrofit of existing connections. This paper presents the application of the FEMA 351 publication for the performance-based seismic upgrade of a nine story steel moment frame building in Oakland, California. The performance targeted was '*Life Safety*' and '*Collapse Prevention*' at the BSE-1 and BSE-2 hazard levels, respectively. To keep the building almost completely operational during construction, a surgical and localized retrofit strategy was necessary. Addition of energy dissipation devices was chosen as the preferred approach. Preliminary analyses indicated that significant inelastic action could be expected in the structural members during the upper bound ground motions anticipated at the site. An extensive non-linear analysis effort was conducted to model the structural performance of the building before and after the retrofit. Fracture at beam ends was explicitly modeled to incorporate inelastic rotation demand effects at the beam-column connections. The analytical effort also allowed the design team to locate the energy dissipation devices at critical locations thereby achieving a very cost-efficient retrofit. An extensive as-built verification of the existing MEP services was performed to address all removal and demolition of existing systems and the restoration of such systems after construction. As part of the construction documents, a detailed phasing plan was developed to enable the building to operate continuously during the construction.

INTRODUCTION

The building under consideration consists of nine stories with three sub-grade basement levels and a rooftop mechanical penthouse. At the ground floor, the approximate plan dimensions are 140 feet by 300 feet. Above the fourth floor the building has a setback resulting in plan dimensions of approximately 90 feet by 300 feet. This 1980's building, designed to the 1982 UBC, employs a universal moment frame to resist lateral demands with almost every beam-column connection detailed to be a rigid moment

[1] Engineer, Affiliated to Crosby Group, Menlo Park, CA, USA. Email: ravi@simply-said.com
[2] General Manager, ABS Consulting, Oakland, CA, USA. Email: owaqfi@absconsulting.com
[3] Principal, Crosby Group, Redwood City, CA, USA. Email: colin@crosbygroup.com

connection. The floor system consists of normal weight concrete on metal deck which is puddle welded to the beams and girders. The exterior façade is composed of pre-cast panels and glass curtain wall. The building was nearly completed when the 1989 Loma Prieta earthquake occurred. This magnitude 7.1 event, approximately 60 miles to the south-southwest of the building, is estimated to have produced ground shaking with a peak acceleration of 0.2g at the building site with a total duration of about 20 seconds. This shaking caused some minor damage to the exterior façade of the building and several modern steel buildings in the vicinity are known to have suffered some damage to beam-column connections.

Prior to the 1994 Northridge earthquake, welded special moment-resisting steel frame structures were considered adequately ductile to provide excellent behavior in major seismic events and few engineers considered earthquake-induced collapse of such structures as credible. This paradigm changed following the 1994 Northridge earthquake, wherein a wide range of non-ductile damage was observed in prequalified moment connections. The damage ranged from minor cracking within welds to almost completely severed columns, with the most common type of damage being brittle fracture of the welds between the column and the beam bottom flange. In response, the Federal Emergency Management Agency retained a consortium of the Structural Engineers Association of California, the Applied Technology Council and the California Universities for Research in Earthquake Engineering, known as the SAC Joint Venture, to research the causes of the unexpectedly poor performance of the these joints and to develop design criteria. The resulting FEMA 350 and 351 documents provide guidelines for the design of new moment connections as well as for the evaluation and retrofit of existing connections. The FEMA 351 publication was adopted for the performance-based seismic upgrade of the building under consideration.

Based on a preliminary seismic evaluation of the building, it was concluded that the building was at significant risk for extensive damage, including potential partial collapse, in the event of a major seismic event. As a result, a detailed evaluation of the building's seismic performance was initiated. The first step in this process involved an assessment of the damage suffered by the existing moment connections during the Loma Prieta earthquake.

INVESTIGATION OF BEAM-COLUMN CONNECTIONS

Within the building, there are approximately 1500 connections that could be considered vulnerable to earthquake-induced damage. Approximately 600 of these consist of beams framing into the column flanges, while the remainder consists of beams framing into the column weak axis. Per the procedures recommended by FEMA 352[3], a random sample of 85 connections was inspected. The inspection process consisted of removing the fireproofing from the connections and performing visual and ultrasonic surveys of the welded joints to determine if any cracks were present. No damage was observed for any of the sample connections. On the basis of the investigations, we developed a greater than 95% level of confidence that fewer than 5% of the connections in the building had sustained damage during the Loma Prieta earthquake. The building is thus considered to be well within the criteria suggested by FEMA 352 to be not significantly damaged and no further connection inspections are recommended.

SITE-SPECIFIC SEISMIC HAZARD

The building is situated in Oakland, California, approximately three miles west of the Hayward fault. The US Geological Survey recently estimated a 16% chance that the Hayward fault will generate a large magnitude earthquake along the northern segment of the fault, running through Oakland, sometime in the next 30 years and a 20% chance of such an event on the southern segment, during the same period.

Cumulatively, this yields a 32% chance of a large magnitude earthquake on the Hayward fault in the next 30 years.

As part of the seismic evaluation of the building, site-specific response spectra and ground acceleration time histories were developed for 500 year and 1000 year return periods. These may be considered to represent events of magnitude 7.0 and 7.25 on the Hayward fault, respectively. The site-specific target spectra are shown in Figure 1. A suite of seven ground motion time histories developed from the 1995 Kobe, 1999 Kocaeli and 1992 Landers earthquakes were selected and scaled to the site-specific spectra. Due to the close proximity of the fault, directionality effects, which can be potentially significant, were considered in the ground motion scaling.

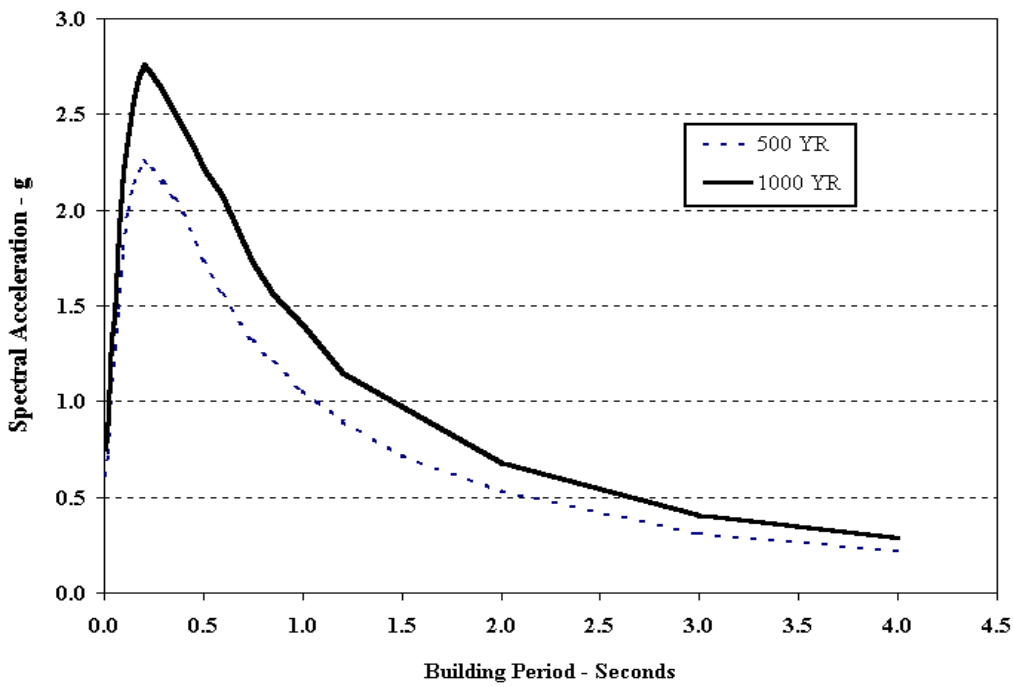

Figure 1. Site specific response spectra

Preliminary studies determined that the effect of the soil-structure interaction between the three sub-grade basement levels and the moderately firm soil would be negligible in reducing the effective level of ground shaking experienced by the building superstructure. This was attributed to the relatively long period of vibration of the building with respect to the fundamental period of the site soil.

PERFORMANCE CRITERIA

FEMA 351 provides criteria for evaluating the ability of a building to meet two different performance levels; namely, Immediate Occupancy and Collapse Prevention. For a given level of seismic hazard, FEMA 351 provides a method for computing a level of confidence that the building would comply with either one of the two performance levels listed above. A 90% or greater confidence level indicates that the building is highly likely to provide the desired performance. A confidence level lower than 50% indicates that the building will most likely not provide the desired performance. The level of confidence is a function of several things, including: site seismicity; building strength, stiffness and deformation capacity; type of connections; level of knowledge regarding the building construction; and level of sophistication of the structural analysis performed to evaluate the building performance. FEMA 351 does not address the

performance level associated with Life Safety, which is the performance level of interest for this retrofit. Using recommendations from FEMA 356[4], the Life Safety performance level was defined as corresponding to response levels at 75% of those at Collapse Prevention. The overall performance objective was *Life Safety* at the 500-year event (DBE) and *Collapse Prevention* at the 1000-year event (MCE). The confidence levels associated with the performance criteria shown in Table 1.

Earthquake	**Performance**	*Confidence Level*
1,000 Year Return Period	No Global Collapse	90% Confidence
	No Local Collapse	50% Confidence
500 Year Return Period	Global Life Safety	90% Confidence
	Local Life Safety	50% Confidence

Table 1. Overall Performance Criteria

For each performance level and the associated confidence, FEMA 351 allows the engineer to compute acceptable values for design parameters such as interstory drifts, column axial compression and column splice tension. These values can then be compared to analytical results to gauge compliance with the performance criteria. Since the major consideration for the performance of welded moment connections is the level of inelastic rotation demands on the joint, the acceptable interstory drift ratios are determined from the limiting rotation demands and beam depths. For this building, the acceptable drift ratios were governed by local collapse considerations and were determined to be as follows:

1. 500-year event: 0.020 for floors 2 and 3, 0.023 for all upper floors
2. 1000-year event: 0.027 for floors 2 and 3; 0.030 for all upper floors

Since the beams are deeper at floors 2 and 3, the limiting drift ratios are lower.

PRELIMINARY AS-BUILT STRUCTURAL PERFORMANCE EVALUATION

Preliminary linear dynamic analyses of the as-built structure indicated that the building would not comply with the performance criteria indicated earlier. Drifts in the as-built structure exceeded the drift limits and several beams and columns were significantly overstressed. It was observed that the drift was greater at the lower floors, especially between the 2nd and 3rd floors. In the existing building several columns are discontinued below the 3rd floor to create a large open lobby at the 1st floor. In addition, the lower floors are typically taller than the upper floors. This combination creates a situation wherein the stiffness at the 2nd and 3rd floors is lower than the floors above. Accordingly, higher drifts were observed between the 2nd and 3rd floors in the as-built structure. Overall, the as-built drifts provided an 85% level of confidence for avoidance of global collapse and a 25% level of confidence with respect to local collapse. The high drifts at the lower floors raised concerns regarding the performance of the moment connections at these levels. Preliminary estimates of the inelastic rotation demands indicated that fractures would occur in the 1st and 2nd floor moment connections, under ground shaking levels slightly less than the 500-year motion. At higher levels of ground shaking the loss of moment connections could lead to a progressively worsened soft/weak-story condition concentrating most of the building displacement within the lower floors. Potential instability leading to either a global or partial collapse could not be ruled out. Non-linear time history analyses performed later confirmed that significant inelasticity would occur within the framing members at these lower floors along with the associated connection fractures.

CONCEPTUAL DESIGN OF DAMPER RETROFIT

One of the requirements of this effort always had been that the building would stay occupied and functional during any potential retrofit construction. The localized areas directly affected by the construction could be isolated with temporary staff relocation, provided that all construction activities would occur either after work hours or on weekends. All areas adjacent to the actual area of construction were required to stay operational. To minimize disruption within these constraints, it was determined that a localized and surgical retrofit strategy was required. More global strategies such as strengthening of the existing moment connections were considered unfeasible. Addition of passive energy dissipation emerged as the most appropriate and viable solution. Although several types of energy dissipations systems (e.g. viscoelastic wall dampers, friction dampers etc.) were considered, the decision was made to utilize viscous fluid dampers.

After an exhaustive investigation of the building functionality and utility (MEP) services, the design team, in consultation with the building owner, identified a number of potential damper locations. A minimum of two damper locations in each principal direction at the upper floors and three damper locations in each direction at the lower floors were desirable. The design team evaluated the available damper locations and a final selection was made so as to achieve a good distribution of dampers within the floors. Stacked damper bays were avoided as far as possible in order to prevent overloading of just a few existing columns. Avoidance of overload in localized areas was also critical to preventing potential foundation retrofit. A total of 74 dampers were located within 42 bays within the 1st through 9th floors. Typical damper bay configurations are shown in Figure 2.

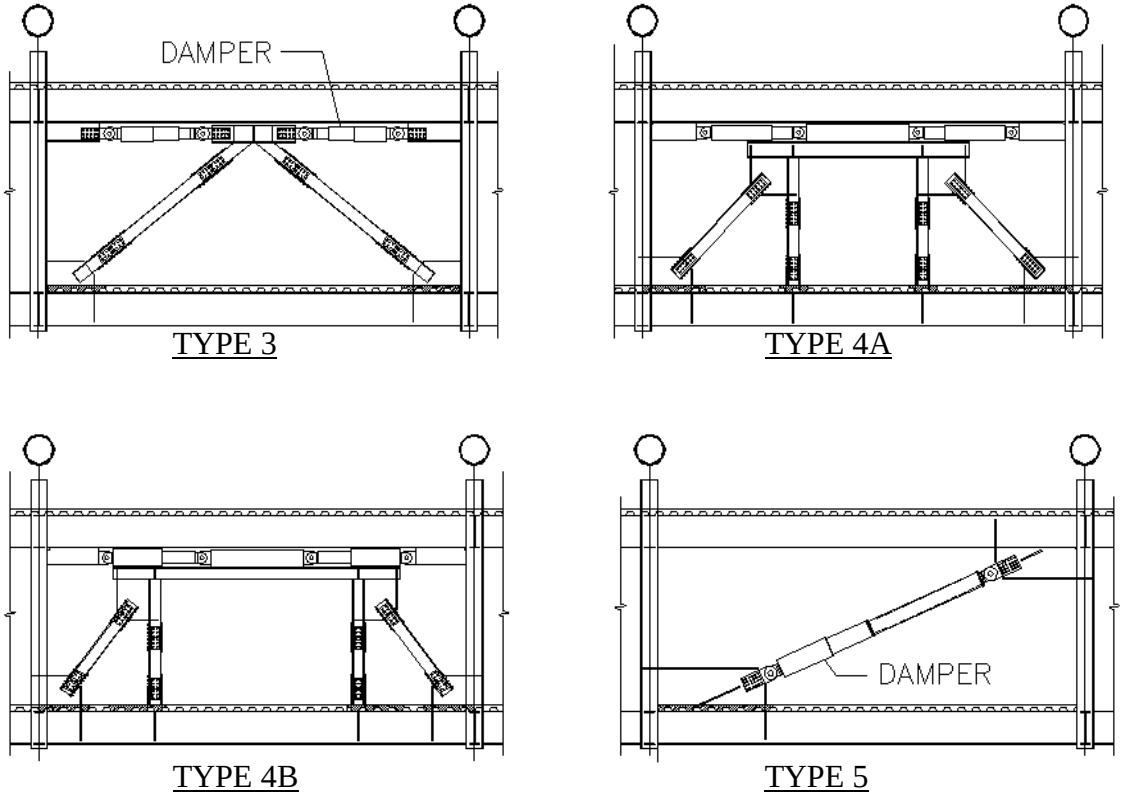

Figure 2. Typical damper bay configurations

In a majority of locations, two horizontal dampers were to be installed per bay (types 3, 4A and 4B). At some locations larger dampers were envisaged in a diagonal configuration (type 5). The dampers ranged in force rating from 250 kips to 600 kips. The damper bay configurations were dictated by functionality considerations, e.g. the type 4A and 4B configurations were developed to allow existing corridors to be maintained in the retrofitted building. Since keeping the building occupied and operational during construction was one of the main conditions for this retrofit, the damper bay configurations were also adjusted as required to maintain existing data/phone lines, as well as critical service lines. The design team was aware that using such unconventional bracing configurations would mandate sophisticated localized analysis to verify that the supporting bracing performed as expected. Non-linear pushover analyses, using single bay models, were performed as part of the final design to evaluate the performance of the different damper bay configurations.

The effectiveness of energy dissipation systems reduces with increased non-linearity within the structure. It was expected that at the peak MCE ground shaking, the added effective damping would tend to be lower than that at lower levels of ground shaking. Using energy considerations, several approximations of the total added damping were performed. Pushover curves performed in the preliminary analyses were used to approximately determine the maximum strain energy within the structure at different displacements of interest. It was observed that the majority of added damping was due to the dampers at the lower floors. The approximate analysis was extended to determine efficiency of dampers at the different floors. The conclusion was that dampers placed at the uppermost three floors did not significantly contribute to the overall added global damping. At the peak MCE (1000-year earthquake) displacements, approximately 5% added global damping was expected to be achievable. At lower earthquake levels, the added damping would be greater. On the basis of the preliminary analyses, dampers were eliminated from the uppermost three floors. Extensive non-linear analyses were used to confirm that this elimination of dampers could be achieved without any adverse effects on the building performance. The non-linear analyses are described in the next section. The final damper distribution consisted of 50 dampers in 29 locations within floors 1 through 6. This reduction in the number of dampers resulted in direct construction cost savings of more than $1 million, along with considerable additional savings in the indirect soft costs associated with impacting three floors within an occupied building.

FINAL INVESTIGATION OF RETROFITTED BUILDING

The linear time history analyses demonstrated that although the overall drift demands on the building would be substantially reduced by the damper upgrade, the lower stories would continue to be subjected to high drifts potentially leading to rotation demands in excess of capacity. In order to account for this, non-linear time history analyses were performed using ANSYS. Seven pairs of ground acceleration time histories were used. P-Δ effects were activated to capture secondary effects in addition to the biaxial demands on the columns. Columns were modeled as plastic beam elements with bilinear axial stress-strain properties including isotropic strain hardening. All new structural members that formed the damper supporting systems were modeled as linear elements.

The moment connection hysteretic behavior was indirectly modeled within the beams. Each beam was modeled as two parallel plastic beam elements, each possessing 50% of the total flexural stiffness and strength of the actual beam. Both beams performed identically until yielding occurred. Once the inelastic rotation demands, at either end, exceed the FEMA 350[1] defined fracture rotation, one of the beams was deactivated from the analysis. This resulted in a loss of beam stiffness and strength (reflecting a sudden joint failure) with the remaining beam providing only 50% of the original capacity. The 50% value was selected to model the condition when fracture occurs at the connection of one of the flanges (typically the

bottom flange), and beam still retains some capacity due to the continuing integrity of the remaining flange connection. The resulting joint hysteretic behavior is shown in Figure 3. The figure shows that, in the flange under tension, a brittle fracture of the weld will occur at a ductility demand of two.

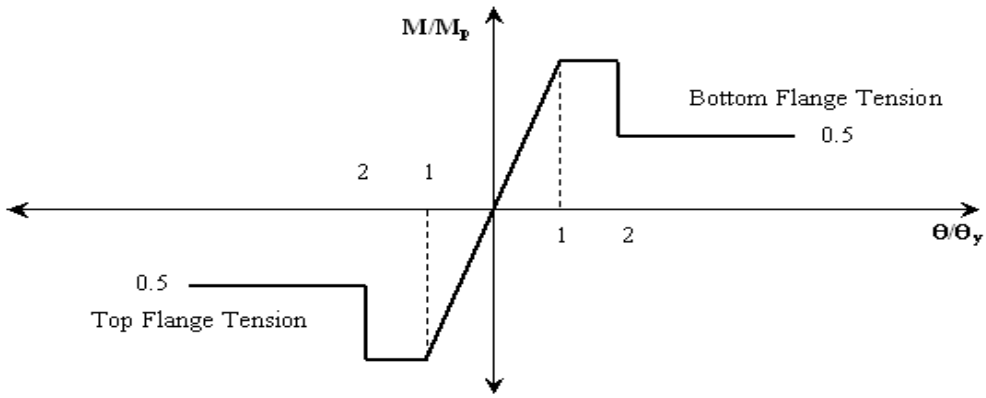

Figure 3. Hysteretic behavior of existing beam-column connection assembly

As mentioned earlier, it was observed that at peak MCE demands the increased inelastic behavior of the structure tends to reduce the effectiveness of the added viscous dampers. However, during smaller earthquakes the structure should remain essentially elastic and enable the viscous dampers to perform to their full potential. The additional damping provided by the viscous dampers resulted in approximately 15% reductions in the maximum drifts.

The performance of the welded moment connections was actively monitored through the time history analyses. It was observed that significant joint fractures would occur in the as-built structure, especially at the MCE level ground shaking. Within the retrofitted structure, some joint failures were still observed, mostly at the lower two floors. Although, the bottom flange connection capacities were exceed in a few locations, the top flanges always remained intact. Thus, the beams did not lose all their flexural capacity and still retained their shear load carrying capacity. This combined with the reduced number of joint fractures allowed the design team to substantiate the effectiveness of the retrofit strategy.

The analysis captured the combined demands of biaxial moments and axial forces on the columns. Some inelasticity was observed in a few columns at the lower floors, while the majority of columns remained elastic throughout the non-linear analyses. The maximum strain in the columns showing inelasticity was observed to be about twice the yield strain, i.e. a ductility demand of about two. This was deemed acceptable.

Per the recommendations of FEMA 351, the columns were evaluated for compression and tension axial loads. In addition, all members were evaluated for combined axial and flexural loads per the provisions of FEMA 356.

OTHER DESIGN CONSIDERATIONS

The added viscous dampers are typically attached to the structure through a variety of bracing configurations, as shown in Figure 2. Thus, the behavior of the energy dissipation assembly is that of a viscous damper in series with a spring. The Maxwell model[5] best describes this behavior. The efficiency of the viscous dampers is a function of the stiffness of the supporting braces. When the braces have

infinite stiffness, the damper experiences the full relative velocity between the floors within which it is installed. Using the Maxwell model, the bracing was designed such that the weight of the supporting steel was optimized with an insignificant loss of in the efficiency of the viscous dampers. All the supporting steel was designed to remain elastic at the anticipated peak loads. To evaluate the performance of the supporting steel at the expected demands, non-linear pushover analyses were performed of the different configurations. A typical deformed shape from pushover analysis of a 4A type configuration on the 3rd floor is shown in Figure 4.

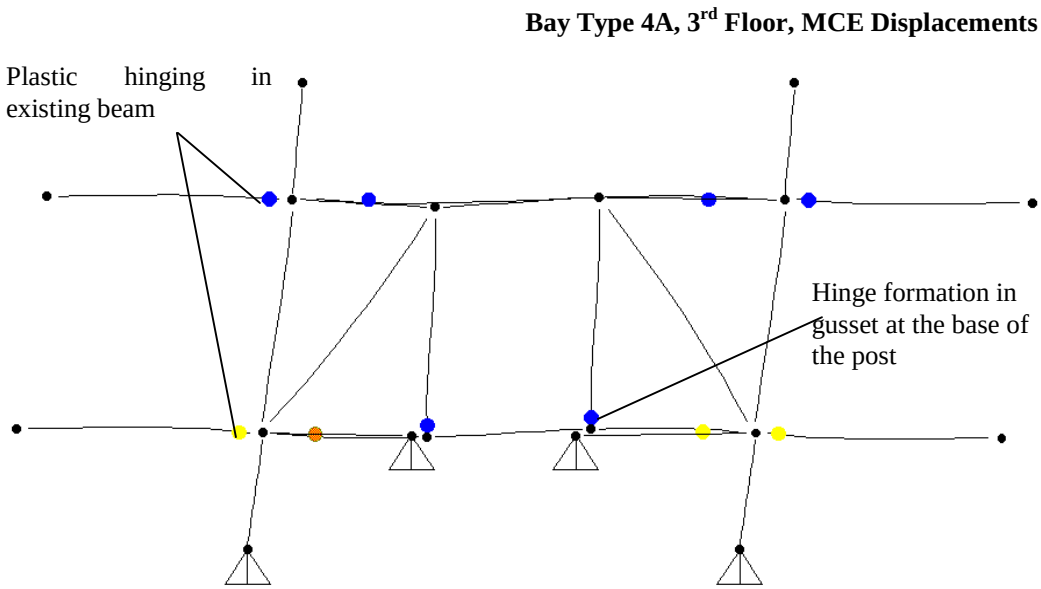

Figure 4. Deformed shape at MCE drifts

It can be seen that plastic hinging was observed within the existing beams and in the gusset plate connecting the new posts to the existing beam. Typical gusset plates and their connections were designed to ensure that the capacity of the gusset could be developed at the bolted connection to the post and at the welded connection to the beam.

Within the damper bays, several existing moment frame connections were modified with gusset plates for attachment of the new bracing and viscous dampers. Figure 5 shows two typical details, one for the brace connection at the lower beam and one for the damper connection at the upper beam. The connection shown in Figure 5(b) is similar to one with a haunch at the bottom flange of a beam in a moment connection. Such modifications of the moment connections were evaluated and designed for expected inelastic rotation demands. Due to the increased effective beam depths at the connections, the inelastic rotations that these connections can undergo without failure are lower than those for the beam section alone. It was determined that the maximum inelastic rotations that the modified connections would be subjected to would be acceptable. The welds between all new plates and existing beams and columns were sized to either develop the plate capacity or to ensure formation of plastic hinges in the members prior to weld failure.

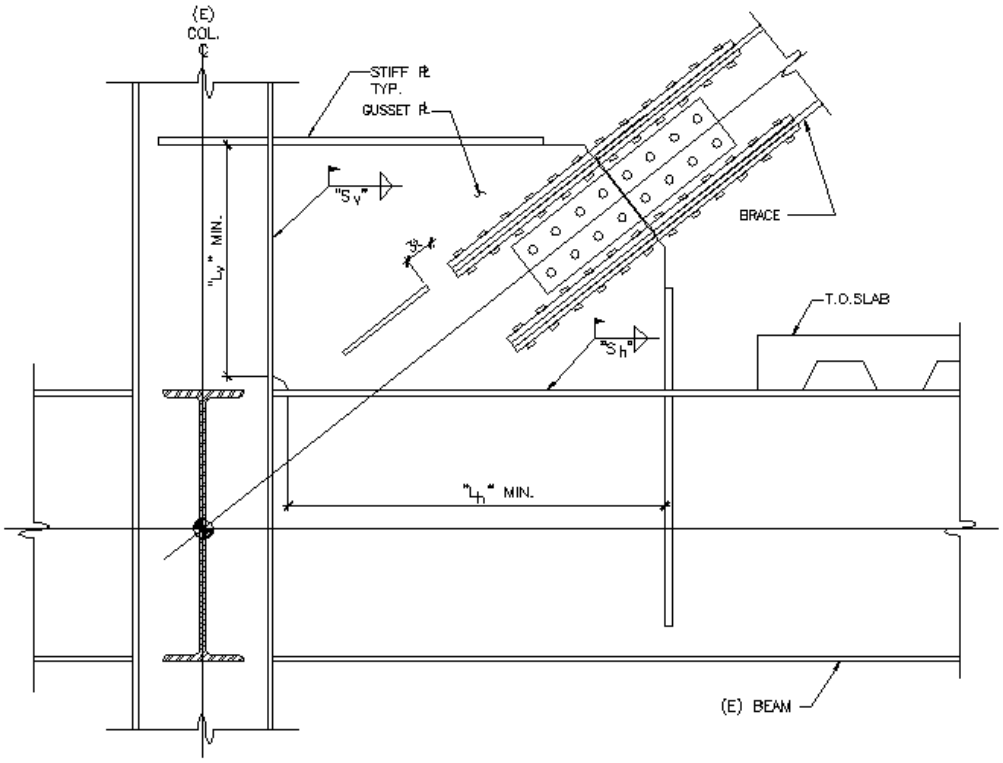

Figure 5(a). Typical gusset detail at existing beam-column connection

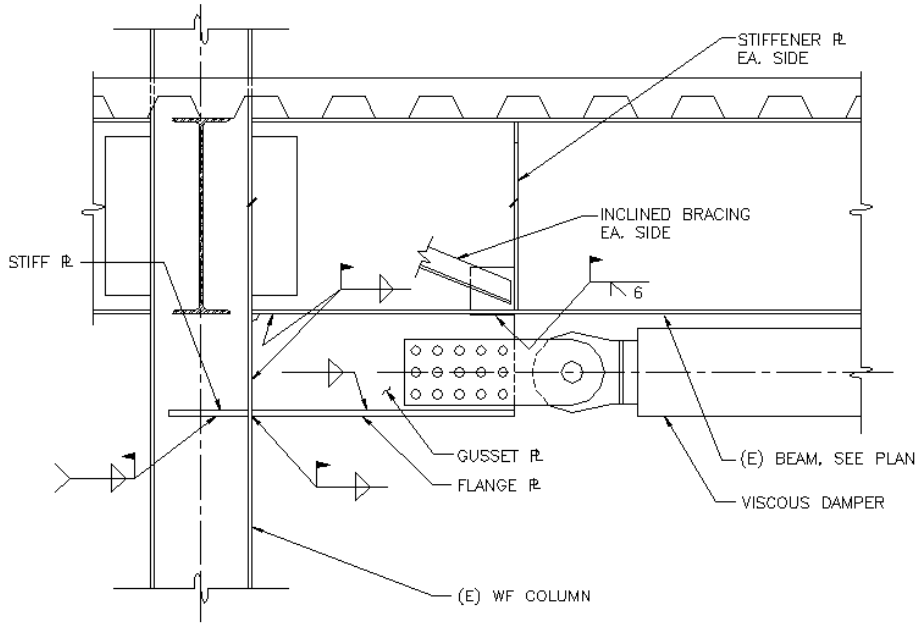

Figure 5(b). Typical connection of damper at upper beam-column connection

To deliver the load to the dampers, collector lines had to be developed using the existing beams. In some instances the existing welded moment connections had to be strengthened either by welding the shear tabs to the beam webs or by adding haunches at the beam-column connections. In such cases, the modified connections were evaluated for inelastic rotation demands to ensure that the shear load carrying capacity

of these beams would not be compromised. Where existing beam-column connections could not be modified due to architectural or functional reasons, the shear capacity between the beams and the slab had to be increased by coring through the slab to the beam top flange and adding new shear connectors.

CONCLUSIONS

It was observed that addition of energy dissipation devices significantly reduced the displacement demands on the building, along with corresponding reductions in inelastic rotation demands on the welded moment connections, and enabled the retrofitted building to comply with the performance criteria. It was observed that at the 1000-year ground shaking, the increased hysteretic behavior of the structure tended to reduce the effectiveness of the added viscous dampers. However, during smaller service earthquakes the structure should remain essentially elastic and thereby enable the viscous dampers to perform to their full potential. The use of sophisticated non-linear analysis allowed the design team to eliminate viscous dampers from the upper floors where their contribution to the building performance was negligible. This resulted in savings of approximately $1 million in construction related hard costs. In addition, the non-linear analyses incorporated the moment connection hysteretic behavior, including weld fracture, to verify that the implementation of the retrofit would significantly reduce brittle joint failures at the peak MCE demands. By locating the dampers appropriately within the building, very limited strengthening of existing beams, columns and foundations was required. The total cost of the retrofit is estimated to be $7 million, at approximately $25 per square foot. At the time of this writing, the retrofit construction is in progress.

REFERENCES

1. SAC Joint Venture. “Recommended Seismic Design Criteria for New Steel Moment Frame Buildings, Report No. FEMA 350.” Federal Emergency Management Agency, Washington, D.C., 2000.
2. SAC Joint Venture. “Recommended Seismic Evaluation and Upgrade Criteria for Welded Steel Moment Frame Buildings, Report No. FEMA 351.” Federal Emergency Management Agency, Washington, D.C., 2000.
3. SAC Joint Venture. “Recommended Post-Earthquake Evaluation and Repair Criteria for Welded Steel Moment Frame Buildings, Report No. FEMA 352.” Federal Emergency Management Agency, Washington, D.C., 2000.
4. Federal Emergency Management Agency. “Prestandard and Commentary for the Seismic Rehabilitation of Buildings, FEMA 356.” Washington, D.C., November 2000.
5. Constantinou, M.C. et al. “Passive Energy Dissipation Systems for Structural Design and Retrofit.” Multidisciplinary Center for Earthquake Engineering Research, Buffalo, NY, 1998.