13th World Conference on Earthquake Engineering
Vancouver, B.C., Canada
August 1-6, 2004
Paper No. 2230

SEISMIC ASSESSMENT AND RETROFIT CONCEPTS FOR THE NEWMARKET VIADUCT

Ian BILLINGS[1] and Stuart TUCKER[2]

SUMMARY

Newmarket Viaduct is a 690m long key 6 lane motorway bridge located in Auckland, New Zealand and was completed in 1966. The site is geologically complex and comprises two separate lava flows which do not quite meet near the centre of the site. These overlie softer soils covering the bedrock. Site amplification effects and differential ground displacement were of particular concern. This paper describes the seismic assessment and the retrofit concepts for the viaduct. The assessment included geotechnical investigations (with shear wave velocity measurements), seismic hazard assessment, materials testing and seismic performance assessment using first principles analysis and modelling techniques. Major seismic vulnerabilities were shear and torsion failures of the transverse piercaps and unseating of the bridge from any of the five transverse joints separating the bridge sections. These vulnerabilities were likely to lead to collapse of some or all of the viaduct at relatively low return periods of seismic shaking. Other vulnerabilities included the pilecaps for the three central piled piers (which unlike adjacent foundations are not founded on spread footings). The extensive retrofit includes; longitudinal post tensioning of the superstructure; major strengthening of the box girder piercaps by concrete encasement together with additional post tensioning; concrete infills of the piercap joints; steel box girder seat extension beams at movement joints; strengthening of the pile caps with transverse post tensioning and the piles with vertical reinforcing; and post grouting the basalt under spread footing foundations. Detailed design is expected to commence in late 2004.

INTRODUCTION

Background

Newmarket Viaduct is a major structure constructed in the 1960s as part of the Auckland urban motorways. The main viaduct comprises two post-tensioned concrete twin celled box girders constructed by the balanced cantilever method, and extending some 690m over Newmarket. Refer to Figure 1. At the northern end of the viaduct twin 50m long multicelled box girder approach bridges carry the motorway over Gillies Avenue to the northern abutment. The viaduct is a vital link in the motorway network and carries some 170,000 vehicles per day on the existing 6 lanes.

[1] Project Director, Beca Infrastructure Ltd, Auckland, New Zealand. Email: ibillings@beca.co.nz
[2] Engineering Manager, Beca Infrastructure Ltd, Auckland, New Zealand. Email: stucker@beca.co.nz

Immediately after the opening of the viaduct in 1966 a number of problems became evident, mostly relating to differential temperature effects. The box was constructed insitu in 3m segments with no reinforcing steel crossing the joints between the segments. In addition, the box is lightly reinforced and has thin flanges, with a 150mm deck slab and 125mm bottom slab. Refer to Figure 2. Soon after opening gaps up to 4mm wide were observed in the bottom slab at a number of the transverse joints and cracking was evidenced at other positions in the box webs and transverse pier diaphragms. The result was a major investigation into differential temperature effects and the application of substantial longitudinal external post tensioning inside the box girders (in the form of Macalloy bars) to strengthen the structure.

This retrofit proved reasonably successful although ongoing problems were experienced with some of the transverse joints fretting under wheel loads on the deck slab. Recent measurements indicate the transverse joints in the bottom slab are now opening by up to 0.3mm.

In the late 1990s Transit New Zealand, the government agency responsible for State highways, initiated a national programme for seismic retrofitting of key bridges and the Newmarket Viaduct was identified as a candidate in the screening programme.

Finally, in recent years the Auckland urban motorways have become congested and a major traffic capacity improvement programme has been initiated. For Newmarket Viaduct this requires an additional southbound traffic lane across the structure to allow capacity improvements on the adjacent motorway section to be realised.

Project Objectives

To address these issues Transit New Zealand decided that a major upgrade of the viaduct was required. The key objectives of the project were

- Retrofit to improve seismic performance
- Widen to allow an extra southbound lane
- Strengthen to remedy deficiencies under temperature and traffic loadings.

Project Scope

To meet the objectives noted above the project required detailed assessment of the existing viaduct and the development of suitable retrofitting and widening concepts. Investigations were carried out of all possible options to meet these objectives and other project constraints.

Two options were identified:

1. Construct a new bridge beside and retrofit of the existing viaduct.
2. Widen and retrofit the existing viaduct, while keeping within the motorway designation boundaries. This essentially involved a median widening by infilling between the two existing viaducts.

Option 2 has significant programme advantages over Option 1 as obtaining planning consents for Option 1 could be expected to take a significant period of time. However because of the complexities associated with construction of the median infill the final option has not yet been selected.

The project scope included further site investigations, a site specific seismic hazard assessment, seismic assessment of existing structures, assessment of stress state and traffic load capacity of existing structures and the development of retrofit and strengthening concepts for Options 1 and 2 outlined above.

Existing Bridge Description
Newmarket Viaduct consists of two parallel post-tensioned concrete box girder structures. Each box girder was designed for (and presently carries) three lanes of motorway traffic at a height above ground level varying from 23 metres to 8 metres. The overall length of the bridge is 688 metres and is made up of spans ranging from 33.5 metres to a maximum of 61.0 metres over Broadway. It has 16 spans with a typical span length of 42.4 metres as indicated in Figure 1.

Each box girder is supported on a single reinforced concrete box column that in turn rests on spread footings or piled foundations (depending on the local ground conditions). The columns have a pin connection at the base and are built into the box girders at the top. Refer to Figure 2.

A transverse pier cap between the tops of each column links the north and southbound boxes to form a pin base portal in the transverse direction.

The girders are continuous in the longitudinal direction between the bridge's six movement joints. These were provided to control temperature and shortening effects in the girder. The joints are detailed with radial-lube (sliding plate) bearings. These are guided in the transverse direction and free in the longitudinal direction.

The bridge was designed during the period 1962 to 1963 and construction of the bridge, using balanced cantilever construction, was completed in 1966.

Site Description
The site subsurface conditions are complex and variable. Most of the viaduct is supported on two basaltic lava flows which originated from volcanic cones located on each side of the valley which the viaduct crosses. The two flows do not quite meet, and thus the northern piers are supported on spread footings on one lava flow, the southern piers on spread footings on another lava flow, while three piers (13, 14 & 15) which are located between the flows are supported on piled foundations which extend through to bedrock. Refer to Figure 1.

The basalt flows overly Waitemata Group sandstone, the basement soft rock in the area, with a veneer (3 to 6m) of softer weathered soil and/or alluvium (some baked) between the two. The basalt flows under the viaduct have a maximum thickness in the order of 15 to 20 metres and were post grouted during the construction of the original viaduct.

Seismic Performance Objectives
Performance objectives were agreed at the outset of the project and reviewed at key stages. The final performance objectives were as follows:

Category	***Performance Required***
Objective 1: Service Limit State (100 year return period motion)	Minimal damage [(1)] Immediate service to all traffic lanes
Objective 2: Ultimate Limit State (1,000 year return period motion)	Repairable damage [(2)] Access to all traffic within a few hours
Objective 3: Collapse Limit State (Maximum Credible Earthquake[(3)])	Low risk of loss of life Low risk of collapse (although significant damage possibly requiring rebuilding) Closure for extended periods is acceptable

Notes:
(1.) Minimal damage – damage repairable without requiring any disruption to traffic.
(2.) Repairable damage – damage repairable with only a few very short duration off peak closures of all traffic lanes in one direction and / or a number of off peak closures of one or two lanes required to effect the repairs.
(3.) Maximum credible earthquake for this study is defined as the mean result plus 1.5 standard deviations for the most critical event. In probabilistic terms, this was found to approximate a return period of between 2500 and 5000 years.

In setting these performance objectives consideration has been given to the importance of the Viaduct with respect to motorway operations, the use and occupancy of the land beneath and the consequence of loss of use or collapse of the structure.

ASSESSMENT

Site Assessment

The site is characterised by Waitemata Group sandstone overlaid by softer material and then a layer of basaltic material from two lava flows (that do not quite meet near the centre of the site).

A major concern at the outset of the project was the potential amplification of the site response (i.e. hazard spectra) resulting from the complex site conditions. The project team were also concerned about the potential for differential displacements between piers and sections of the structure supported on separate lava flows.

Accordingly, further subsoil investigations were carried out. These included additional boreholes to investigate the softer layer and geophysical testing that included downhole and crosshole shear wave velocity testing.

The shear wave velocity profiles obtained clearly showed the softer layers to have similar shear wave velocities to the upper layers of the underlying Waitemata Group sandstone (in the order of 700 m/sec). Shear wave velocities in the basaltic flows ranged from 1500 m/sec to approximately 2000 m/sec in areas where the basalt was more massive and competent. Using this data two dimensional finite element modelling of the site soil profile was carried out by Professor Geoff Martin at University of California (Los Angeles) to assess likely amplification effects.

These studies concluded that the site could be characterised as a soft rock for seismic hazard assessment and that site amplification effects were not significant.

Seismic Hazard Assessment

The site is located in an area of moderate seismicity, the nearest identified fault being some 30 km from the site. A site specific hazard assessment was carried out including:-

- Review of current geology, tectonics and seismicity data.
- Preparation of a seismicity model.
- Selection of attenuation relationships describing attenuation of earthquake shaking with distance from source, for the sub soil conditions relevant to the site.
- Assessment of peak ground accelerations and hazard spectra (response spectra) at the site
- Assessment of peak ground accelerations and the response spectrum for the maximum credible earthquake.

The maximum credible earthquake was found to be from the Kerepehi Fault located 40km from the site and with an assessed magnitude of 6.9.

The assessment results are presented in figures 6 and 7 below

Figure 6: Recurrence of Peak Ground Acceleration (PGA) – McVerry (2003) (Site Soil Class A/B) Attenuation Model, M>+5.5

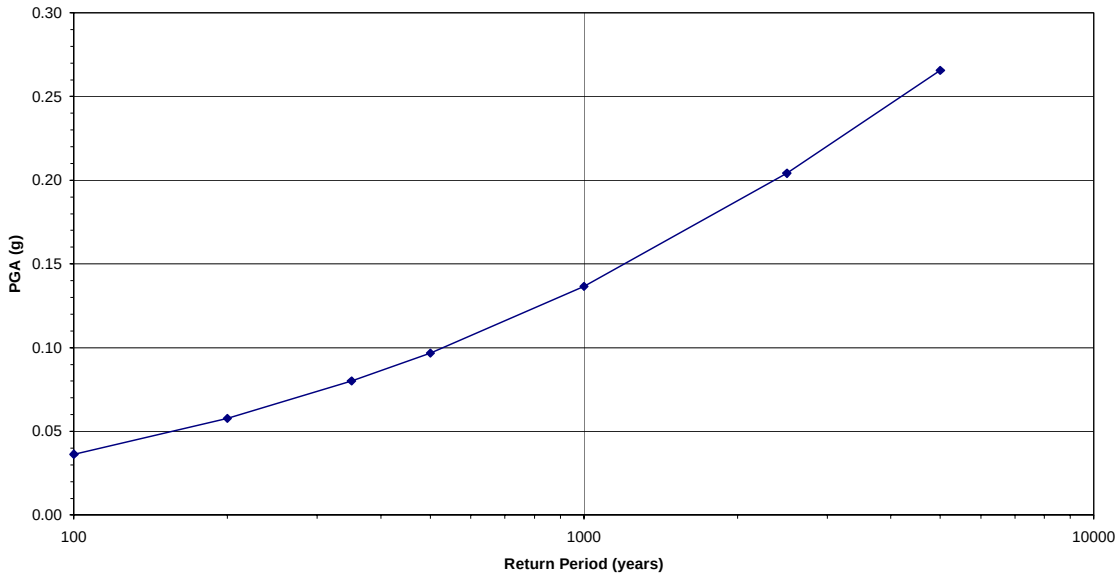

Figure 7: Elastic Uniform Hazard Spectra (100, 1000, 2500 and 5000 y RP) and MCE Elastic Response Spectra Candidate 1) (Median + 1.5 Standard Deviation) – McVerry (2003) (Site Soil Class A/B) Att. Models

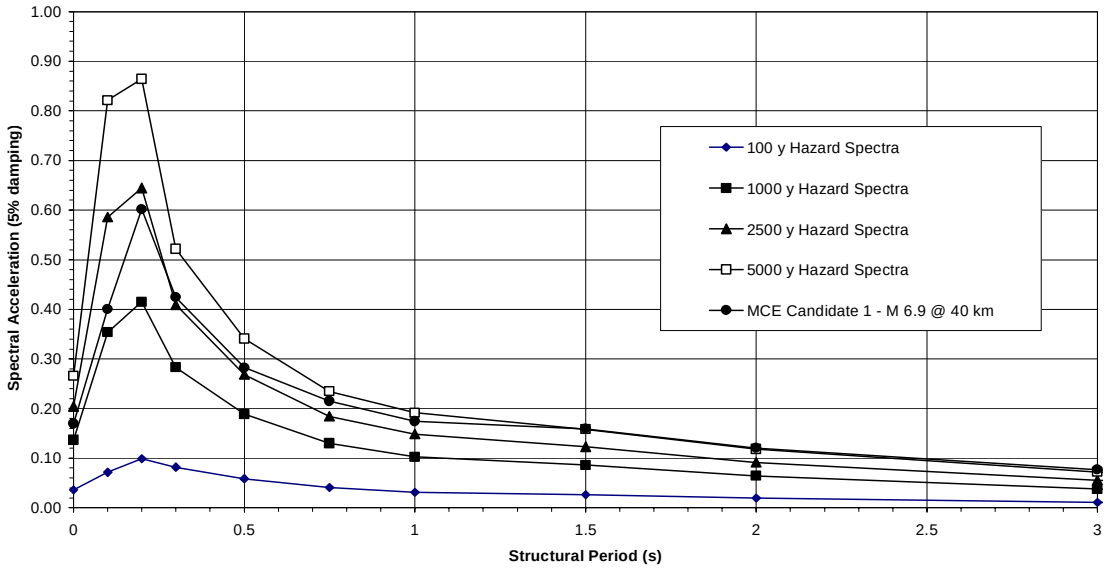

Structural Assessment
An assessment of the structure from first principles, including pushover analyses and assessment of component strengths and post elastic behaviour, was carried out using methodologies which have been developed over the last few years and are clearly set out by Priestley et al [1]. Material properties were determined from test results of samples of concrete and reinforcing steel taken from the viaduct.

Three dimensional SAP2000 models of the structure were developed and response spectrum analyses carried out to assess the seismic actions on the structure. The structure has relatively flexible piers with pinned bases and typical structural periods ranged from 0.4 to 2.0 seconds transversely and from 0.7 to 3.2 seconds longitudinally.

Displacement ductility demands and post elastic displacements were generally assessed using the equal displacement theorem which is applicable for the period ranges of the particular components of interest for this structure.

Movement Joints
Loss of support at any of the movement joints in the superstructure due to either transverse or longitudinal actions would result in collapse of part or all of the viaduct. In the longitudinal direction the joints are free to slide and vertical support will be lost if movements exceed about 150mm. The response spectrum analyses showed that onset of pounding at the movement joints could be expected to start to occur at around the 1000 year return period response level. To assess the performance under the MCE the method suggested by Priestley et al [1] which estimates the total joint movement as twice the absolute peak displacement between adjacent structures was used. A number of other methods (including Ruangrassamee & Kawashima [2], Des Roches & Muthukamar [3]) were studied however, the Priestley et al approach, was considered to be the most appropriate and was used for this assessment.

Piercaps
The piercaps which carry the superstructure loads out to the twin columns at each pier are a particularly critical component. Under longitudinal seismic action, large torsions are induced in these members. These piercaps comprise longitudinally post tensioned hollow box beams. They were analysed using three dimensional strut and tie models. The assessment included for the effects of the longitudinal stresses in the superstructure. The piercap/column joint is an intersection of the longitudinal box girders with the box girder piercaps and the box columns. The assessment also included analysis of this joint, generally following guidelines by Priestley et al [1]. Both the piercaps and piercap/column joints were found to have insufficient strength to carry seismic loads at relatively low return periods of seismic shaking.

Columns
The pier columns are typically 1200 x 3000 box columns with 300 thick walls. They are typically reinforced with 32mm diameter longitudinal bars without horizontal cross ties across the box walls.

In general the columns were assessed as remaining elastic even in the maximum credible earthquake shaking, except for several of the shorter columns at the southern end. However, the demand/capacity ratios were low (maximum demand/capacity ratios 1.01).

Foundations
Initial analyses of the spread footing foundations indicated the likelihood of flexural and shear failure occurring if the foundation stiffness of the basalt was not considered. Accordingly, finite element modelling of the footing and subsoil support system was carried out. This indicated greatly reduced demands and the foundations were assessed as performing satisfactorily, provided the adequate reliability and uniformity of the stiffness of the supporting rock mass could be achieved.

The pile supported caps at Piers 13, 14 and 15 required detailed strut and tie analyses to resolve seismic demands. This was primarily because of unusual reinforcement detailing, comprising diagonally opposed bars bent in a circular arc extending from the base of the columns to the tops of the piles. The caps were assessed as performing adequately, up to return period of about 2000 years.

Ground Displacement Effects
As discussed above the geotechnical and geophysical investigations and associated site assessments have shown the site can be expected to behave as a soft rock site and that amplification of ground displacement effects is not assessed as being significant.

However, due to the length of the viaduct consideration was given to the effects of the seismic ground waves travelling through the site and thus causing additional displacement demand on the structure and the movement joints. The approach suggested by Priestley et al [1] was used to determine the maximum longitudinal differential displacement between two points. The wave passage effect is due to non-vertical wave propagation which produces systematic time shifts in the arrival of the seismic waves at support locations. The wave passage effect depends on the apparent velocity of the waves. Studies of instrumental arrays in California, Taiwan and Japan have shown that the apparent velocity of the S-waves is typically in the range of 2000 to 3500 m/s. [4]. A velocity of 2500 m/sec was adopted as being a reasonable value for the conditions at this site.

The wave passage effects on the structure were found to be small. In particular for the shorter pier columns the peak demand/capacity ratio increased to 1.08 and the curvature ductility demands for this low ductility demand were assessed and found to be acceptable due to the low resultant concrete strains. The effects at the movement joints were also investigated but were found not to have a significant effect on assessed displacements.

VULNERABILITIES

Based on the analyses and assessments described above the key seismic vulnerabilities were assessed as set out in Table 1 below.

The most significant vulnerability is the piercap beam shear and torsional failure which was assessed as occurring at several of the piercaps at relatively low return periods, and which could lead to potential collapse of those bridge sections, and possibly the entire viaduct.

Summary of Key Seismic Vulnerabilities

Bridge Component	*Principal Direction of Earthquake Motion*	*Vulnerability*	*Approximate Return Period for Vulnerability*	*Performance Level Achieved (1)*		
				1	*2*	*3*
Pier Cap Beams	Longitudinal	Shear failure of pier caps leading to potential collapse of bridge sections	200 years	✓	**X**	**X**
	Transverse	Shear failure of pier caps leading to potential collapse of bridge sections	500 years	✓	**X**	**X**
Pier Cap Joint Zones	Longitudinal & Transverse	Shear Failure through joint leading to potential collapse of bridge sections (in conjunction with previous vulnerability)	500 years	✓	**X**	**X**
Movement Joints in Deck Box Girders	Transverse	Failure of bearing fixings followed by exceeding movement capacity leading to partial or total collapse of spans.	700 years	✓	**X**	**X**
	Longitudinal	Movement capacity exceeded leading to partial or total collapse of spans.	2000 years	✓	✓	**?**
Piers 13,14 and 15 Foundations	Longitudinal & Transverse	Onset of shear failure as soon as piles develop tension followed quickly by loss of vertical support. Collapse uncertain.	2000 years	✓	✓	**X**

Note (1) Refers to the three performance objectives, ✓ = pass, X = fail

RETROFIT CONCEPTS

Retrofit concepts were developed to address the vulnerabilities identified above. These are described below.

Piercap Beams

Two types of pier cap retrofit are required depending on the shear and torsion demands. Type 1 involves the addition of reinforced concrete 'leaves' to both sides of the existing piercap and the addition of longitudinal post tensioning. Type 2 requires additional concrete flange thickenings. Details are illustrated in Figure 3.

Pier Joints

Three piercap/column joints are vulnerable and require retrofitting by filling the joint core with concrete.

Movement Joints in Superstructure
Retrofitting is required to give satisfactory performance under both longitudinal and transverse seismic actions. The retrofit concept developed comprises steel box beams projecting through the joints with sufficient capacity to carry the vertical loadings and provide an extended seating, while also providing the necessary transverse load capacity to maintain the relative position of the ends of the adjacent cantilevers. Details are indicated on Figure 4. Note that additional longitudinal external post tensioning is required in the superstructure both to carry the additional dead load of the retrofit and to retrofit the bridge for temperature and traffic loads.

The alternative of restraining the joints longitudinally was investigated but rejected as the seismic actions in the shorter columns was found to increase significantly giving greatly increased demands, which would have led to retrofitting of a number of the columns.

Pilecaps
The pilecaps supporting piers 13, 14 and 15 are to be retrofitted by:

- post tensioning the caps in both directions with top and bottom cables.
- Installing reinforcing bars into the piles to carry the tension demands into the caps.

Details are shown on figure 5.

Spread Footing Foundations
To ensure that the footings could reliably transmit load into the underlying basalt, a retrofit programme of further grout injection is proposed. This will ensure that the required ground stiffness is achieved to allow the footing/rock system to perform satisfactorily.

CONCLUSION

The assessment and development of retrofit concepts for a key viaduct structure has been completed and the complex issues associated with the site and structure addressed by a rational and pragmatic approach. The project is expected to proceed to detailed design in late 2004 when the client has made an option selection.

ACKNOWLEDGEMENTS

The authors wish to acknowledge the inputs of other design team members and specialist advisers. The assistance and support of Transit New Zealand throughout the project is gratefully acknowledged.

REFERENCES

1. Priestley MJN, Seible F, Calvi GM “Seismic Design and Retrofit of Bridges.” John Wiley & Sons 1996.
2. Ruangrassamee A and Kawashima K “Relative Displacement Response Spectra with Pounding Effect.” Proc. Twelfth World Earthquake Engineering Conference, Auckland, New Zealand 2000
3. DesRoches R & Muthukamar S “Effect of Pounding and Restraints on Seismic Response of Multiple Frame Bridges.” Journal of Structural Engineering July 2002.
4. Abrahamson NA “Generation of Spatially Incoherent Strong Motion Time Histories” Proc. Tenth World Earthquake Engineering Conference, Madrid, Spain 1992.

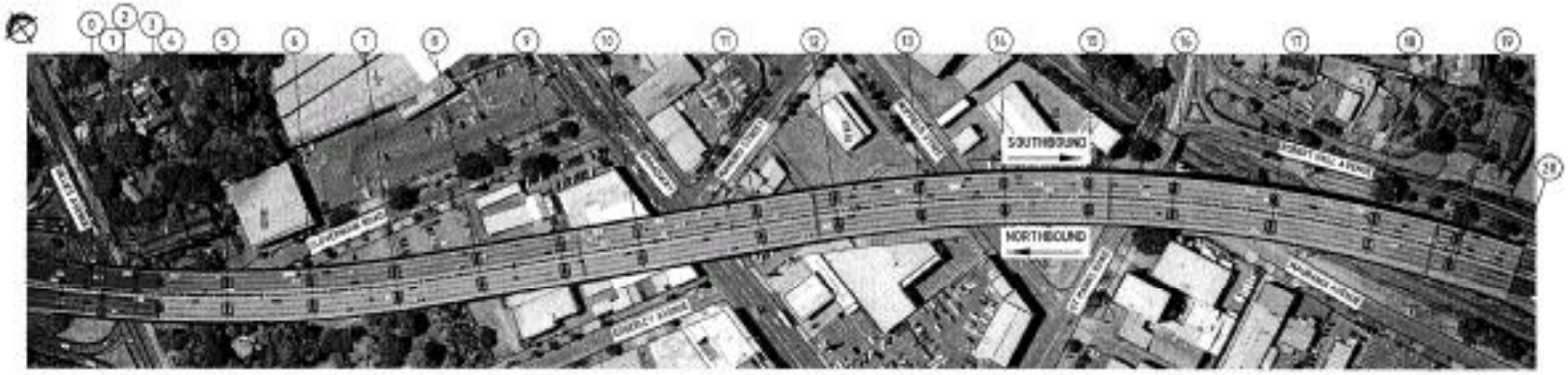

PLAN

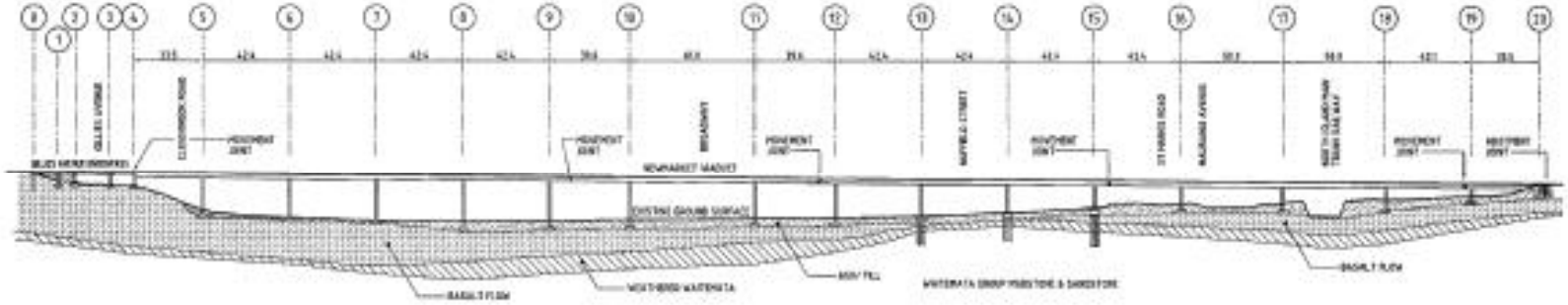

ELEVATION

5.

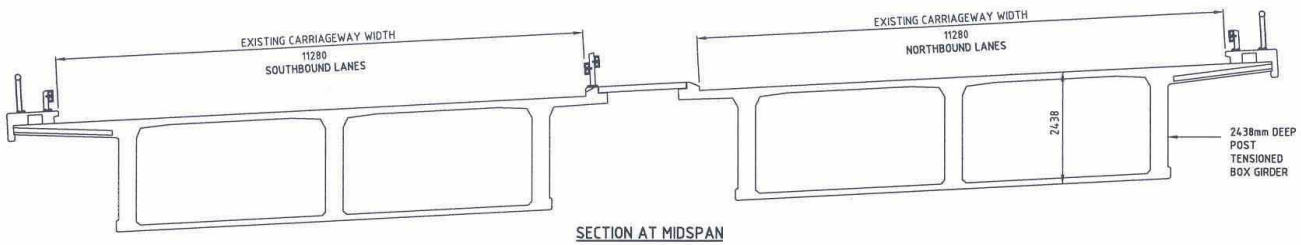

SECTION AT MIDSPAN

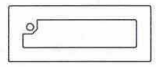

2 SECTION

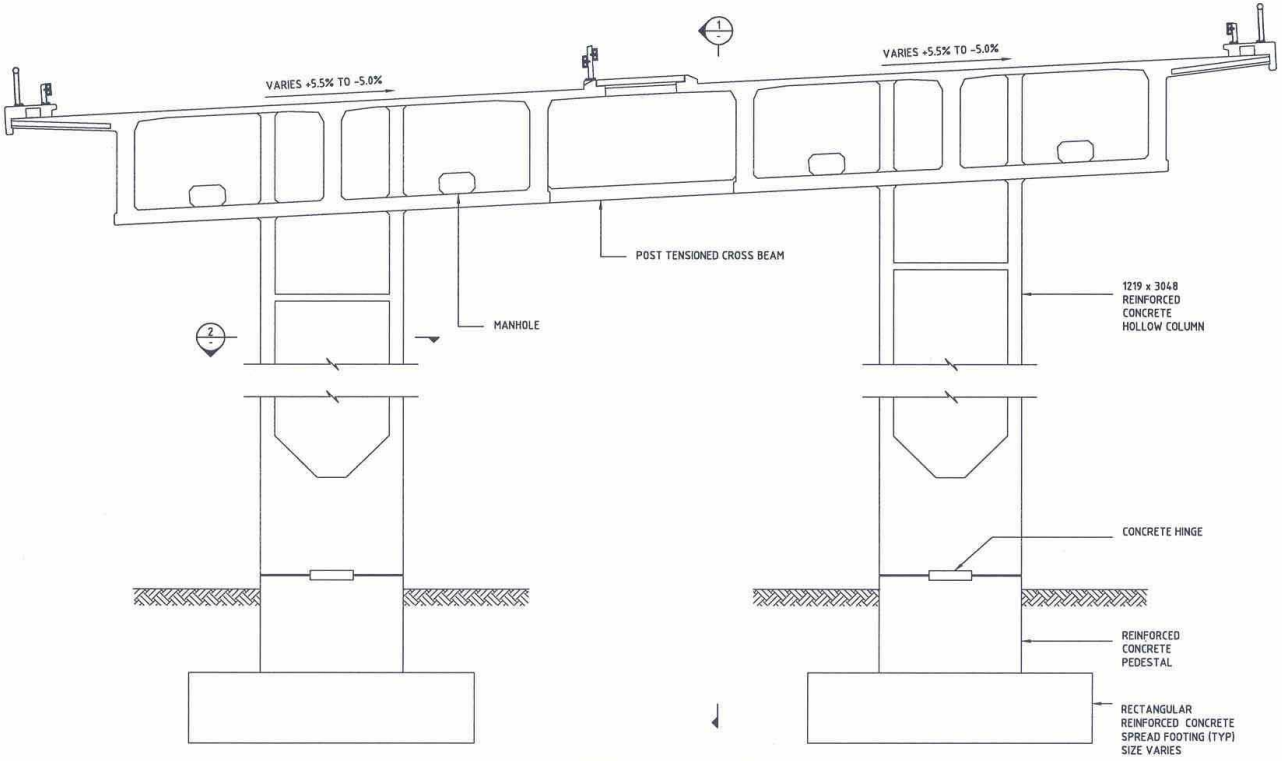

SECTION AT TYPICAL PIER

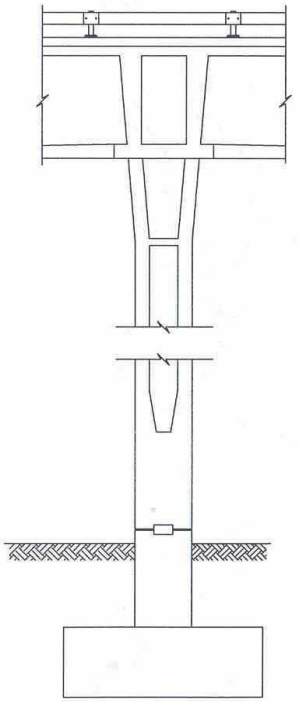

1 SECTION

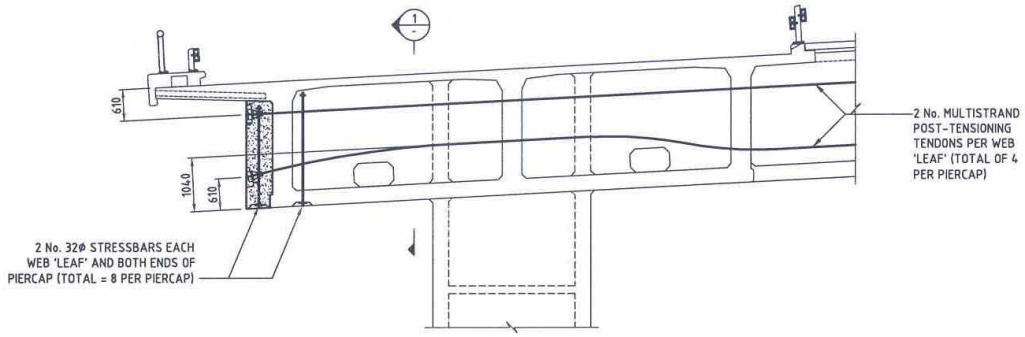

TYPE 1 PIERCAP RETROFIT

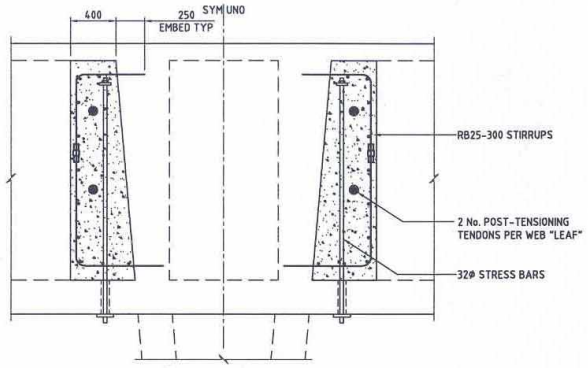

1 SECTION TYPE 1
1:20

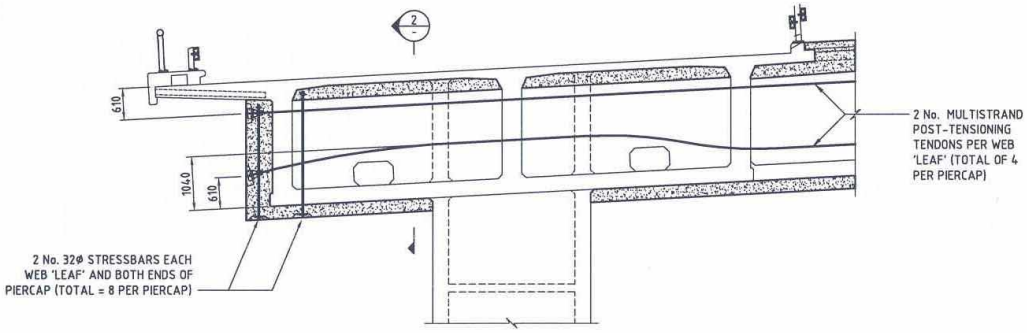

TYPE 2 PIERCAP RETROFIT

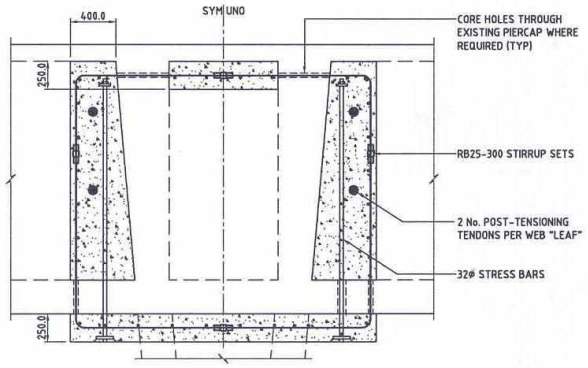

2 SECTION TYPE 2
1:20

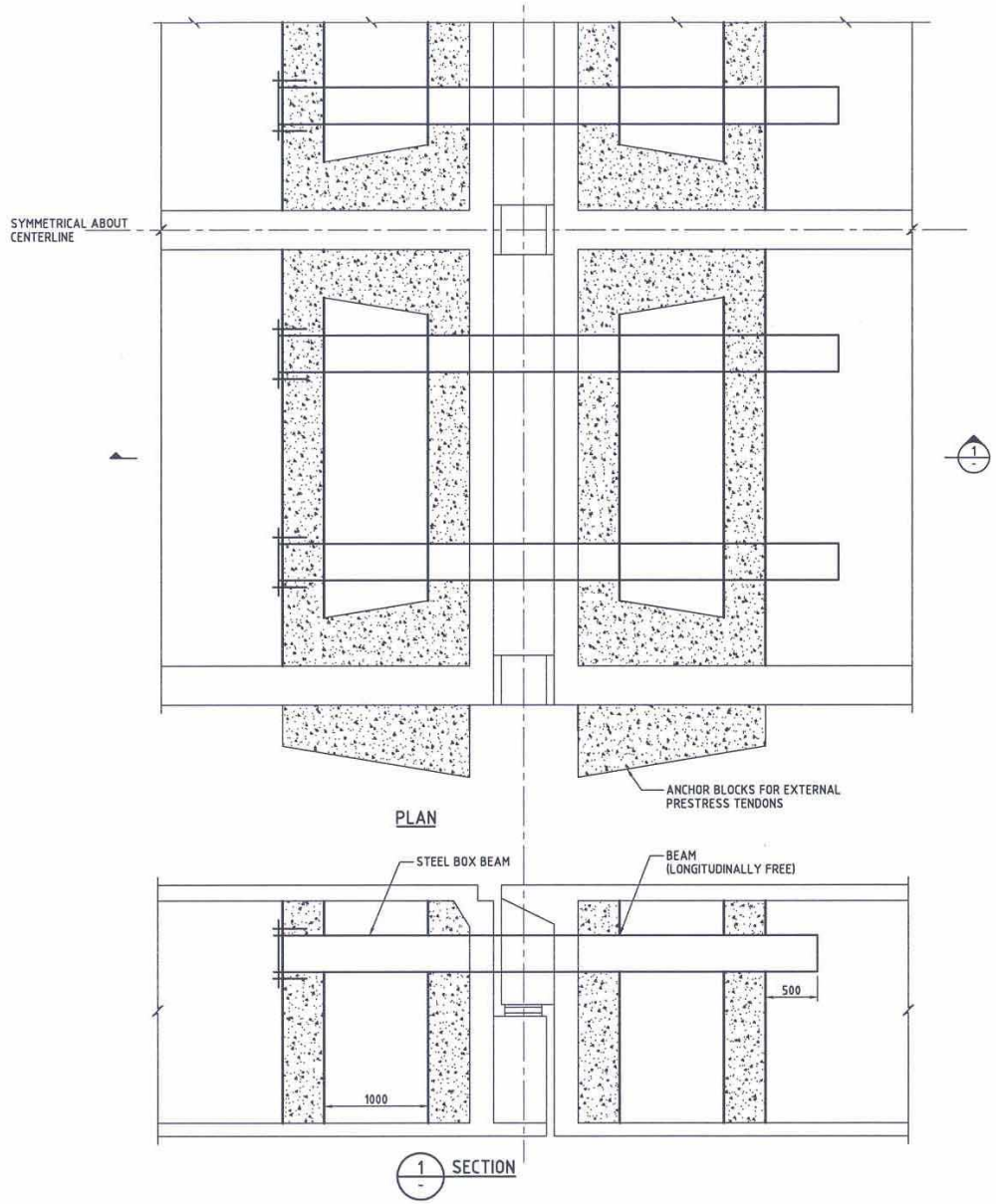
SYMMETRICAL ABOUT CENTERLINE
ANCHOR BLOCKS FOR EXTERNAL PRESTRESS TENDONS
PLAN
STEEL BOX BEAM
BEAM (LONGITUDINALLY FREE)
500
1000
1
SECTION

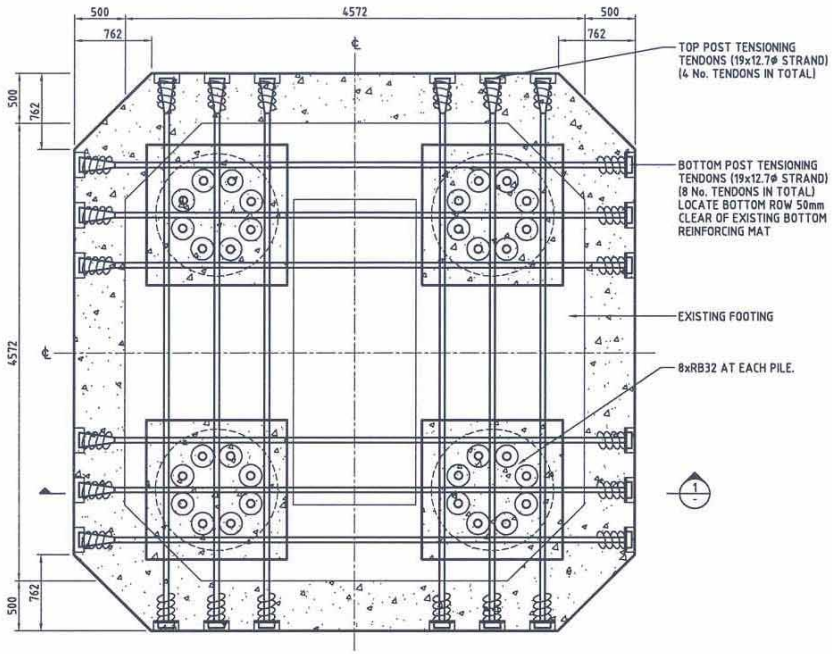

PLAN

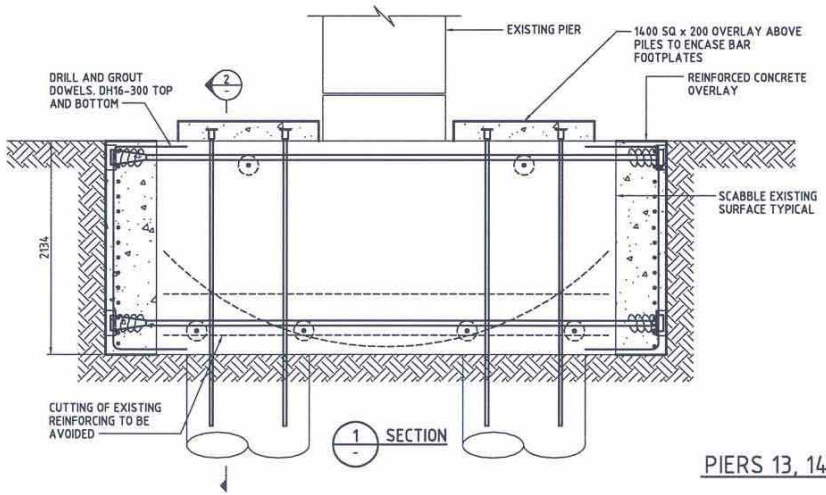

1 SECTION

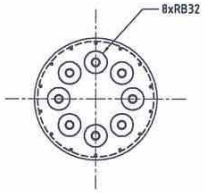

3 SECTION

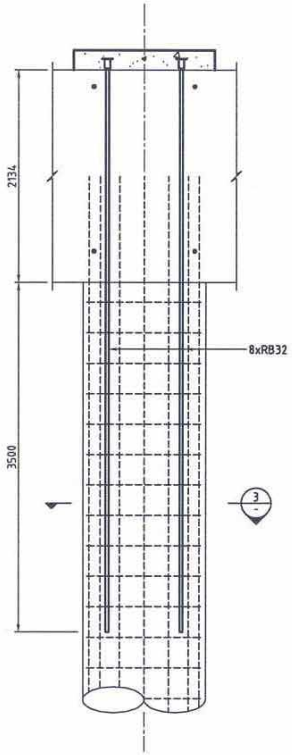

2 SECTION

PIERS 13, 14 & 15 PILECAPS