13th World Conference on Earthquake Engineering
Vancouver, B.C., Canada
August 1-6, 2004
Paper No. 218

EVALUATION OF SEISMIC RESISTANCE OF EXISTING MOMENT-RESISTING STEEL FRAME BUILDINGS

Sulojana SHANMUGANATHAN[1] and Charles CLIFTON[2]

SUMMARY

This paper presents an evaluation method for assessing the seismic resistance of existing Moment-Resisting Steel Frame (MRSF) buildings. The proposed evaluation method is a two-level procedure. In the first level, the frame system is checked to see whether there is sufficient capacity (first yield) to resist the seismic actions generated by the recommended strength assessment limit, with only very low ductility demand. If the frame system has adequate capacity to satisfy this criterion and exhibits a specified range of "good feature attributes", then it passes the check. Otherwise, the second level check has to be carried out to determine strength, stiffness, and ductility of the frame system in the inelastic range. If the frame system fails to pass the second level check as well, then the system needs strengthening.

The connections in the pre-1976 buildings are riveted, welded, or bolted types, and are generally the weak link in the seismic resisting system. The strength and rotation capacity of connections is thus found to be critical and guidance is given in evaluating the capacity of typical connections.

INTRODUCTION

Older buildings designed to the earlier Standards may meet the current requirements for strength, however they primarily lack the required ductility and dependable hierarchy of failure modes. This is evident from the behaviour of these buildings under recent major earthquakes such as Northridge, US (1994) and Hyogoken Nanbu (Kobe), Japan (1995) earthquakes. Consequently, the evaluation of earthquake resistance and retrofitting of these buildings has become vital to maintaining a safer infrastructure. The vulnerability of older buildings under major earthquakes and the necessity to provide consistent evaluation criteria to assess their behaviour have prompted the New Zealand Building Industry Authority to commission the New Zealand Society for Earthquake Engineering to produce a document [1] presenting evaluation criteria and guidance on strengthening methods. The document deals with various types of structural forms and materials. This paper focuses on evaluation of seismic resistance of pre-1976 Moment Resisting Steel Frame (MRSF) buildings.

[1] Structural Engineer, Opus International Consultants, Auckland, New Zealand. Email: sulo@opus.co.nz
[2] Structural Engineer, HERA, Auckland, New Zealand. Email: structural@hera.org.nz

TYPICAL PRE-1976 STEEL BUILDING SYSTEMS USED IN NEW ZEALAND

This section describes some of the typical pre-1976 steel building systems used in New Zealand.

Iron and steel in existing buildings

Bussell (1997) [2] gives a good summary of the use of iron and steel in structures from 1780 to the present day. In the New Zealand context, the relevant period covers 1900 to 1976. Most ferrous material in existing New Zealand buildings will be steel, which was the preferred material for structural members in buildings from 1880 onwards. The exception is columns, especially gravity carrying columns functioning as vertical props for the floor. Cast iron was used for these through to just after 1900 and cast iron columns are found in some of the oldest New Zealand buildings.

Cast iron is a low-strength, low ductility material not suitable for incorporation into a seismic-resisting system. However, if used as a propped gravity column, with the supports for the beams assessed and reinforced if necessary (e.g. with steel bands) to avoid local fracture under seismic-induced rotation, they can be dependably retained.

Wrought iron has good compressive and tensile strength, good ductility and good corrosion resistance. Its performance in this regard is comparable to that of steels from the same era, which largely ended around the 1880s and 1890s. The principal disadvantage of wrought iron was the small quantities made in each production item (bloom), being only 20 to 50 kg. This meant that the use of wrought iron in structural beam and column members required many sections to be joined by rivets. For that reason it was rarely used in building structures in New Zealand. If a building being assessed contains members built up from many small elements comprising I sections, channels and/or flats and which dates from earlier than 1900, then the use of wrought iron in these members should be further assessed, using the guidance in Bussell (1997) [2].

All other ferrous components in buildings under assessment can be considered as being made from steel. If in doubt, the visual assessment criteria in Bussell (1997) [2] can be used for more detailed visual consideration.

Moment-resisting frames

Beams

Beams were typically rolled steel joist (RSJ) sections, which are I-sections where the inside face of the flanges is not parallel to the outside face, being at a slope of around 15%. This makes the flanges thicker at the root radius than at the tips. The flange slenderness ratios of RSJ sections are always compact when assessed to NZS 3404:1997. These beams were typically encased in concrete for fire resistance and appearance, with this concrete containing nominal reinforcement made of plain round bars or, sometimes, “thin wire mesh”.

Columns

Columns formed from hot-rolled sections used either hot-rolled steel columns (RSCs) or box columns formed by connecting two channels, toes out, with a plate to each flange. The columns were encased in lightly reinforced concrete containing nominal reinforcement made of plain round bars.

Compound Box Columns

Compound box columns were also formed from plates, joined by riveted or bolted angles into a box section and encased in concrete. Examples of this type of construction are shown in Figures 1 and 2.

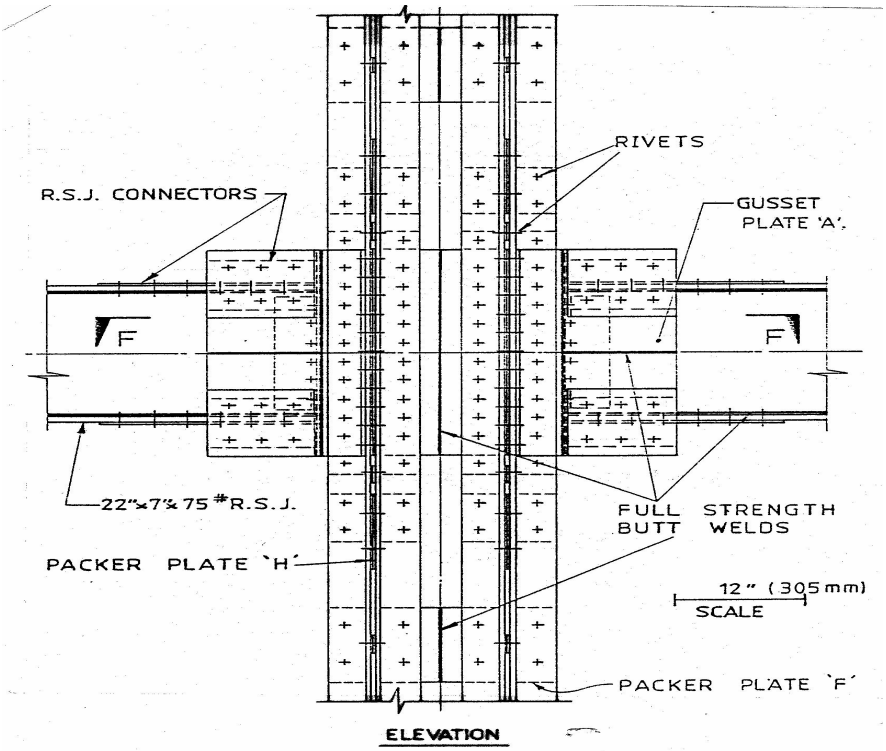

Figure 1 Riveted Steel Beam to Columnn Joint Detail, Government Life Insurance Building, 1937

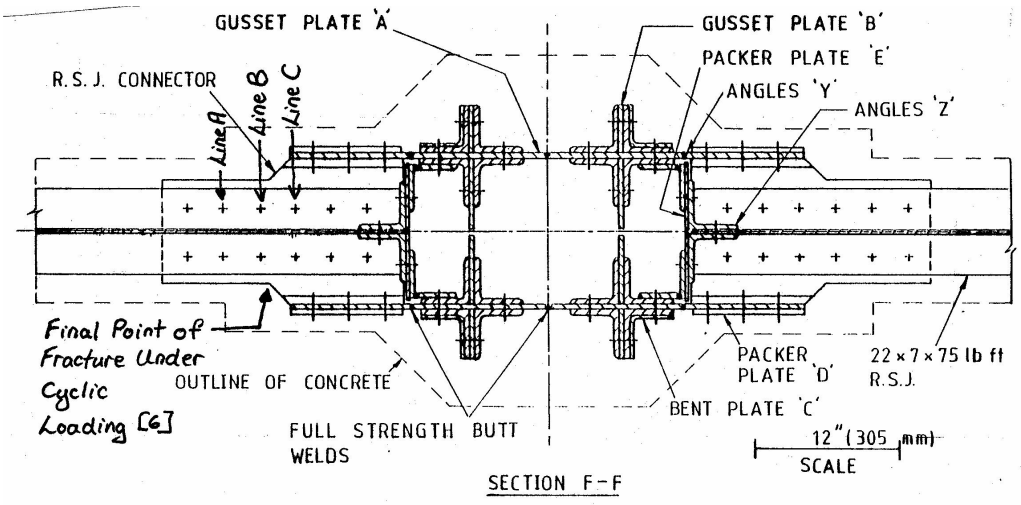

Figure 2 Reveted Steel Fabrication, Government Life Insurance Building, 1937

Beam-Column Connections

Beam-column connections in the earlier moment frames typically comprised semi-rigid riveted or bolted connections. The RSJ beam flanges were bolted to Tee-stubs or to angles bolted to the column flanges or to lengths of RSJ bolted to side extensions of the column plates. An example of the latter is shown in

Figure 2. The RSJ beam web was connected by a double clip angle connection to the column flanges, again as shown in Figure 2. A simpler version of a semi-rigid connection used in some pre-1976 buildings is shown in Figure 3. These joints generally involved the use of rivets up to 1950 and HSFG bolts after 1960, with a changeover from rivets to bolts from 1950 to 1960.

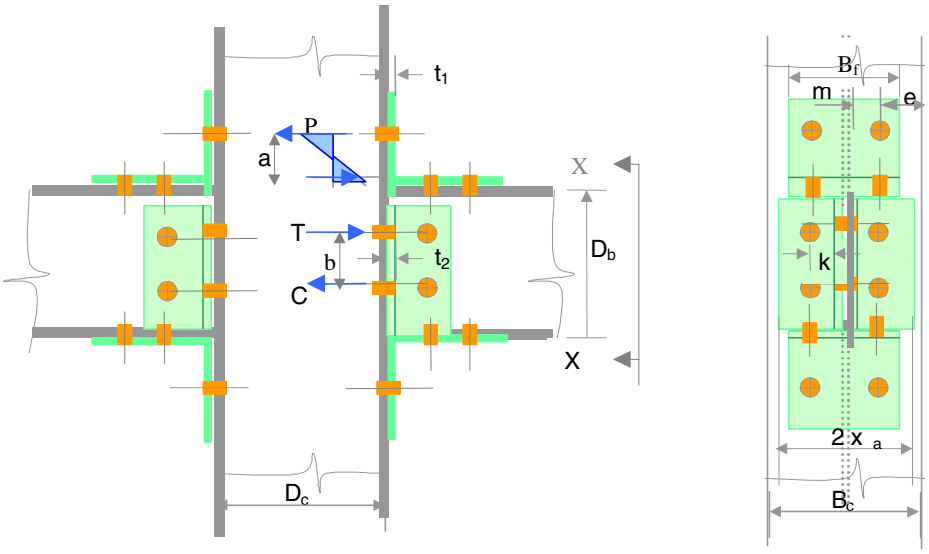

Figure 3 Semi-Rigid Joint Detail

Beam-column connections from about 1940 onwards were also arc welded. The strength and ductility available from welded connections requires careful evaluation and attention to load path. Figure 4, taken from a building partially collapsed by the Kobe earthquake of 1995, shows a failed beam-column minor axis connection, forming part of a moment-resisting frame in that direction. The beam was welded to an endplate which was fillet welded to the column flange tips. Unlike the connection detail shown in Figure 2, there was no way to reliably transfer the concentrated axial force in the beam flanges, that is induced by seismic moment, from the beam into the column, with the weld between endplate and column flange unzipping under the earthquake action.

Figure 4 Failed Beam-Column Weak Axis Welded Connection from the 1995 Kobe Earthquake

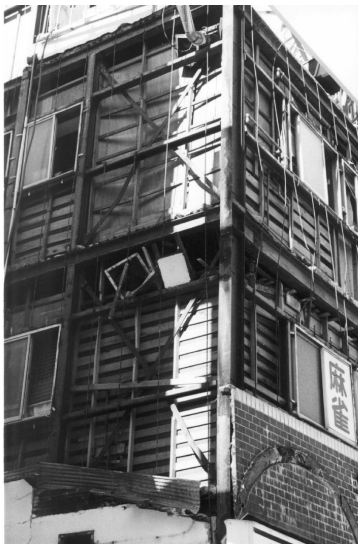

Figure 5 Braced Frame with Light Tension Bracing, Showing Damage but not Collapse from the 1995 Kobe Earthquake

Splices in Columns
These typically involved riveted (pre-1950) or bolted (post-1950) steel sections, with the rivets or bolts transferring tension across the splice and compression being transferred by direct bearing. Figures 1 and 2 show plated box columns connected by riveted angles, while Figure 4 shows an intact bolted UC splice detail in the column, this being a fore-runner to the bolted column splice details of HERA Report R4-100 by Hyland [3]. Such bolted splices generally perform well.

Braced frames
For the pre-1976 buildings, braced frames incorporating steel bracing involve concentrically braced framing (CBF), either x-braced CBFs or v-braced CBFs. Figure 5 shows an X-braced CBF with relatively light bracing and Figure 6 a V-braced CBF. Both are from Kobe, Japan but are similar to details used in early New Zealand buildings.

Figure 6 V-braced CBF showing damage but no collapse from the 1995 Kobe earthquake

MATERIAL PROPERTIES AND MEMBER STRENGTHS

In the assessment of an existing structure, realistic values for the material properties, particularly strengths, must be used to obtain the best estimate of the strengths and displacements of members, joints and connections. Minimum material properties and strengths that were specified in the original design are not appropriate for use in assessment procedures. The effect of variations in material strength on the hierarchy of failure must be considered. Details are given Draft NZSEE Recommendations [1].

The assessment procedure uses the expected member strength and a strength reduction factor, φ, of 1.0.

ASSESSMENT OF STRENGTH AND CAPACITY

General and Frequency of Application
The assessment of member and connection strength and rotation capacity is applied in accordance with the recommendations of HERA Report R4–76 (Feeney and Clifton (1995) [4]) for preliminary design of seismic-resisting systems. The results are carried forward into the evaluation of the seismic resisting system.

The assessment, at least for preliminary evaluation, should be undertaken at every fourth floor for a building over 12 storeys (including the roof) in height, or at every third floor for a building over 4 and up

to 12 storeys (including the roof) in height, or at every second floor for a building up to 4 storeys (including the roof) in height (from Feeney (1995) [4]). In each case the assessment should start at the first level above seismic ground level. Seismic ground level or "base" level is the level at which the seismic load is first considered to be transmitted directly sidesways (wholly or in part) into the surrounding ground. The uppermost principal seismic mass level should be included in this assessment.

When the strength hierarchy at each level under assessment is determined and if this shows the hierarchy to be the same at all levels then the above will be sufficient. If, however, it changes over the levels, then further levels will need to be included in the assessment until the designer is satisfied that the existing strength hierarchy each throughout the seismic resisting systems is known.

Capacity of connection elements and connections

When assessing the capacity of connection, the following should be taken into account:

i. Shear capacity of rivets can be determined from Barker (2000) [5]. The key equation is derived from the bolt shear capacity provisions of NZS 3404, which is

$$V_f = 0.75\, f_{uf,\,exp}\, k_f\, n_x\, A_o$$

where V_f is the nominal shear capacity of the rivet. All other notation is from NZS 3404.

ii. Tension capacity of rivets is determined using Clause 9.3.2.2 of NZS 3404:1997.

Assess the diameter of the rivet shank from the diameter of the rivet head in accordance with Figure 7

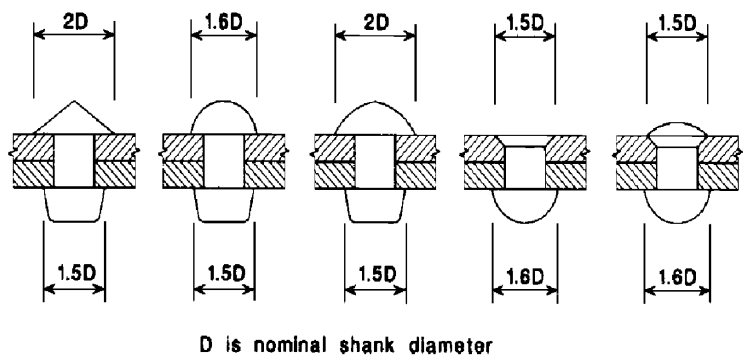

Figure 7 Typical rivet shank and head diameters

Determine the capacity of connection elements and connections in accordance with the following:

i. Be aware that some less scrupulous erectors made up some dummy rivets from moulded putty covered in paint on larger groups of rivets. Hitting each rivet with a hammer will soon identify any dummy ones!
ii. Assume that concrete encasement, if present and with any amount of confining reinforcement, will prevent local buckling of the steel members. This assumption may not hold for members in regions subject to significant inelastic demand and will need to be assessed more closely for such regions.
iii. For connections of the type shown in Figure 2, involving two or more steel plates across the joint subject to major axis shear and bending and confined within a reinforced concrete surround, assume that the joint panel zone will remain elastic or nominally elastic under out of balance shear force induced by the out of balance moments generated by the connection. For the sub-assemblage shown in Figure 2, this has been confirmed by inelastic cyclic testing of Wood (1987) [6].

iv. For connections involving a panel zone web more typical of modern details, determine the nominal panel zone shear capacity from NZS 3404 Clause 12.9.5.3.2. Designer judgement may be required for this.

v. In calculating the connection capacity, assume that:

- the connections to the beam flanges develop and transfer the moment-induced flange axial forces from the beam to the column
- the connections from the beam web to the column transfer gravity and seismic-induced vertical force and also will transfer horizontal actions if a suitably stiff and strong horizontal load path from the beam web into column is available
- if the connection has a direct connection between beam web and column via welded or bolted plates or cleats, with this connection separate to the beam flange to column connection, then, for seismic assessment, the vertical shear capacity can be assumed to be adequate.

Bolted and riveted connections

For connections of the form shown in Figures 1 and 2, use the general procedure for moment rotation determination given in Roedar (1994) [7]. This gives connection moment-rotation capacity in the elastic and inelastic regimes, along with a commentary on the derivation of the curve. For the type of connection shown in Figure 2, use the method from Roeder (1996) [8] in conjunction with Clifton, (1996) [9].

Using the provisions of Roeder (1996) [8], the moment-rotation curve can be constructed as follows:
The general shape of the curve takes the form of Figure 8.

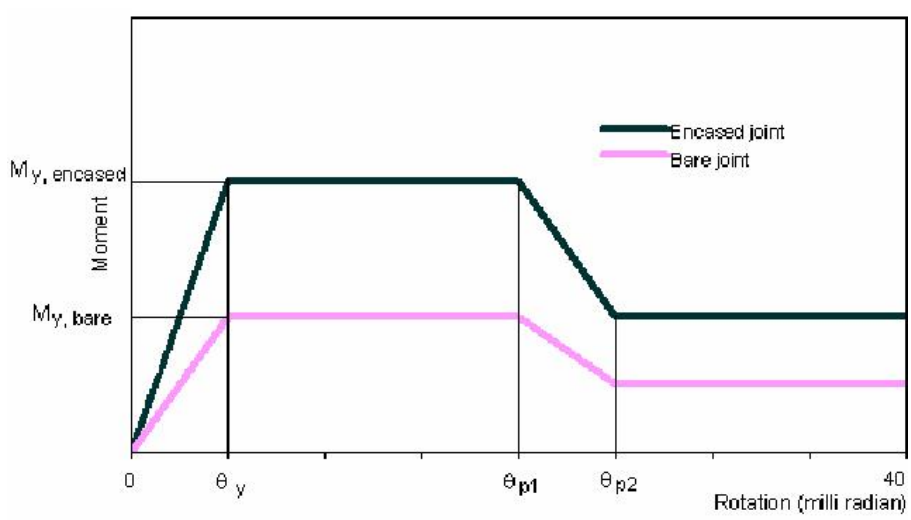

Figure 8 Moment Rotation Curve

Where:

θ_y = 3 milliradians
θ_{p1} = 12.5/ d_b milliradians
θ_{p2} = $(\theta_{p1} + 5)$ milliradians
$M_{y,bare}$ = $N_{tfw}\, d_b$
d_b = depth of beam (m)
N_{tfw} = nominal tension capacity of the weld between the beam flange and the unstiffened column flange
$M_{y,encased} = 1.3 M_{y,bare}$

For rotations greater than θ_{p2}, $M = M_{y,web}$

$M_{y,web}$ = moment capacity of the beam web to column alone. This is governed by the moment capacity of the beam web to column connection and needs to be determined from the particular connection detail used
$M_{y,web}$ is taken as constant from $\theta_{p2}$to θ_u = 40 milliradians.

For vertical load carrying capacity, use the provisions of HERA R4-100 (Hyland (2003) [3]) to determine the capacity of the beam web to column connection, ignoring the effect of moment on the connection in reducing the shear capacity when making this check.

For other bolted and riveted connections, determine the strength and rotation capacity from first principles using the guidance given in Roeder (1996) [8].

Welded beam flange to column connections
Check if the welded connection can transfer the moment-induced beam actions into the column. If so, then the connection can develop the moment capacity of the incoming beam. If not, as would be the case for an unstiffened column, assume that the weld at the beam flange will fail early in a severe event and determine the moment capacity as for a semi-rigid connection based on the moment capacity of the connection to the beam web.

If the connection is suspected of being welded but is not visible, due to e.g. concrete encasement and with no design or shop drawings being available, then the encasement material must be removed from a representative joint to allow a reasonable assessment to be made. The difference in connection moment-rotation capacity between a joint that can transfer the flange axial forces induced by inelastic beam action dependably into the column and one that cannot is so great that this must be assessed and not guessed.

Similarly the existing state of the weld needs to be assessed using visual inspection techniques; engineers doing this should be familiar with these techniques.

Member strength and rotation capacity

Bare steel beams, solid sections

i. Determine the section status (compact, non-compact, slender) using the Steel Structures Standard and hence the section moment capacity, M_s or member moment capacity, M_b. Use the former for a beam supporting a concrete slab, and the latter for beams supporting a timber floor. In the timber floor case, the restraint offered can be determined using HERA R4–76 (Feeney and Clifton (1995) [4]) and HERA R4–92 (Clifton (1997) [10]). In (iv) below, M_s is used to denote either M_s or M_b as appropriate.
ii. Determine the highest possible member category from NZS 3404 Table 12.5, then:
iii. Use NZS 3404 Table 4.7 (2) to obtain θ_p.
iv. Construct the moment-rotation curve (θ_i, M_i) from the following points:
(0,0); (θ_y, M_s); ($\theta_y + \theta_p$, M_s); ($\theta_y + 1.25\ \theta_p$, $0.5\ M_s$); ($\theta y + 1.5\ \theta_p$, 0)
where $\theta_y = 3 \times 10^{-3}$ radians.
3 milliradians is taken as a reasonable first yield rotation for a steel member.

Concrete encased steel beams, solid sections

(i) Assume that the concrete encasement suppresses local buckling and provides slight strength enhancement and hence that $M_s = 1.1\ S\ f_y$, with S is the plastic modulus and is determined in accordance with NZS 3404 Clause 5.2.3 (see Section 5.2.5.2 of Clifton (1994) [11] for guidance on calculating S).

As stated above, the concrete encasement is assumed not to contribute significantly to the member flexural strength. For typical levels of longitudinal and transverse reinforcement in concrete-encased steel frames and concrete strength/quality, this is realistic (NZS 3404:1997).

(ii) Use NZS 3404 Table 4.7(2) to obtain θ_p for member category 2.

(iii) Construct the moment-rotation curve from the same points as given in the previous section above.

Bare steel columns, solid sections

a) Determine the section status (compact, non-compact, slender) and hence the section moment capacity reduced by axial force, M_r.

b) Determine the highest possible member category, then:

c) Use NZS 3404 Tables 4.7(2) to 4.7(4) to obtain θ_p.

d) Construct the moment-rotation curve (θ_i, M_i) from the following points.

- If the member has full lateral restraint

  (0,0); (θ_y, M_r); ($\theta_y + \theta_p$, M_r); ($\theta_y + 1.25\ \theta_p$, $0.5\ M_r$); ($\theta_y + 1.5\ \theta_p$, 0)

- If the member does not have full lateral restraint

  (0,0); θ_y, M_o); ($1.5\ \theta_y$, $0.5\ M_o$); ($2\ \theta_y$, 0)

where,

$\theta_y = 3 \times 10^{-3}$ radians

M_o = Member moment capacity reduced by axial force, to NZS 3404 Clause 8.4.4

M_r= Section moment capacity reduced by axial force.

The axial force used in calculating M_r and M_o shall be that from the gravity load associated with earthquake action, that is, the seismic contribution shall be ignored.

The principal reason for this is because experimental tests (MacRae (1990) [12] and Brownlee (1994) [13]) have shown that the inelastic behaviour and rotation capacity of a steel beam-column subject to compression and major axis bending is dependant on the magnitude of constant compression force.

This simplifies the determination of (θ_i, M_i) with little loss of accuracy for columns that are resisting relatively low levels of vertical force, especially the non-seismic component of vertical force. This is typically the case for columns in pre-1976 steel MRSFs.

EVALUATION PROCEDURE

Assessment of Ductility and "Good Features"

The evaluation procedure is aimed at determining whether a system has sufficient first yield capacity to resist the seismic actions generated by the required strength assessment limit. This required strength assessment limit is a specified fraction of the design seismic actions for a new building, given by the New Zealand Loadings Standard, NZS 4203. The seismic actions for this evaluation may be further reduced by the ductility capacity of the existing system. This involves determination of the actual ductility demand, μ_{act}. For strong column / weak beam or weak joint systems, a hand procedure for rapid determination of μ_{act} is given in NZS 3404 Commentary Clause C12.3.2.3.2.

However, if this assessment shows that $\mu_{act} > 1.0 - 1.5$ is required, then the influence of inelastic response must be considered. This influence will be less significant on systems exhibiting the following "good features":

i. The strength hierarchy at all levels (except for the uppermost seismic mass level) is to be beam sidesway (ie. weak beam or weak connection) rather than column sidesway.

ii. For weak connections, the evaluation of the connection must show the following:

a. For elements on the principal load-carrying paths through the connection the weakest component must not be a connector (weld, rivet, bolt), nor involve net tension failure of a component.
b. The connection must be able to retain its integrity, with regard to carrying shear and axial force, when its moment capacity is reduced.

iii. For all beam to column connections, the connection must not be of a type that has the potential to introduce local buckling or tearing failure in the column (eg. through having no column stiffeners adjacent to an incoming beam flange in a welded beam to column connection).
iv. The assessed inelastic response of the system (this assessment is qualitative rather than quantitative) must be essentially symmetrical in nature and must not contain features that will inevitably lead to a progressive displacement of the building in one direction.

Systems where above features are present gain advantages in terms of first yield assessment and inelastic response evaluation.

Strength hierarchy of system

To determine the strength hierarchy of the seismic resisting system the following should be considered:

i. Assemble the nominal flexural strengths of the individual connections, beam and column members for each level that has been considered.
ii. Use the guidance in the section "ASSESSMENT OF STRENGTH AND CAPACITY" to select the number of levels to consider when doing a preliminary evaluation, noting that the number of levels being evaluated may need to be increased in accordance with (vii) below.
iii. The flexural strength at that level is governed by the weakest of the individual elements. In many instances, this will be the connections.
iv. The location of these weakest elements will be the yielding regions. They are the primary elements at that level.
v. Determine if the individual beams of the MRSF at each level under consideration can support the moments from long-term gravity loading ($G + Q_u$) on them in a simply supported condition. If they cannot, then halve the plastic rotation capacity, as appropriate, for the beams and for the connections. This reflects the monotonic, cumulative nature of inelastic demand on the yielding regions of such members.
vi. On the basis of the relative strengths of the frame elements and the location of the weakest elements, determine if the MRSF response will be a beam sidesway or column sidesway mechanism. Note that semi-rigid connections, where these connections are flexurally weaker than the beams or columns, generate a beam sidesway mechanism. Designer judgement is required here. (If the designer has any doubt about this assessment, see Sections 3.5 and 4.1–4.3 of HERA Report R4–76 (Feeney and Clifton (1995) [4] for further guidance on this.)
vii. The strength hierachy may change from column sidesway to beam sidesway at different levels with the same system. If this occurs for the levels being checked from (i) above, then the strength hierachy for all levels within the system needs to be determined and the worst case used. This will almost always be the column sidesway mechanism.
viii. If the difference in strength between a column sidesway mechanism and a beam sidesway mechanism is less than 15%, then the effect of both needs to be determined.

Foundation strength and stiffness

The foundation system must be able to transfer the seismic forces between superstructure and ground and to resist any anticipated ductility demands.

A strength assessment of this should be made, involving:

- selecting a dependable load path for transmitting the earthquake plus associated gravity design actions between superstructure and ground
- checking the adequacy of all components along this load path to resist these actions and to sustain any anticipated ductility demands.

The stiffness of the foundation should be modelled as an elastic spring at the column base. Its stiffness can be determined on the basis of its pinned or fixed status, from the strength determination, using NZS 3404 Clause 4.8.3.4.1(a) or (b) as appropriate.

The shear resistance of the foundation needs to be greater than that of the column member; design and detail, if necessary, to achieve this when undertaking remedial work on the building..

Structural ductility factor necessary to meet the design seismic actions generated by the required strength assessment limit

The procedure to determine the ductility factor involves the following:

i. For systems that exhibit the four "good features" as stated in *EVALUATION PROCEDURE: Assessment of Ductility and Good Features*, the equivalent static method of analysis from NZS 4203:1992 may be used for this determination

ii. For systems that do not exhibit these four "good features", modal analysis (or numerical integration time history analysis) should be used for this determination.

iii. Where appropriate, adjust the seismic design actions in systems with riveted or bolted joints, to account for the magnitude of initial viscous damping. This adjustment may be made for $\mu_{act} = 1.5$ and requires an assessment as to whether that will be met for the initial evaluation. The appropriate damping value is 10%. The adjustment is made in accordance with Clause 12.2.9.2 of NZS 3404.

iv. For modal analyses:
    a. Model the system using the elastic properties of the components. Use this to obtain the period and the modal participation factors
    b. Determine the member actions required for the combined modes (SRSS method can be used) and for the first mode response alone.

v. Choose a starting value of μ and compare the member actions from the analysis, for the given value of μ, with the member nominal yield capacities.
    a. Increase or decrease the value of μ until the lowest value of μ is obtained for which no components are significantly beyond their nominal yield capacities. Significant means > 10% over nominal capacity for any one component and > 5% for all components in any one storey or at any one level.
    b. The value of μ must be between $1 = \mu = 6$.
    c. The lowest value of μ for which v(a) is achieved is the actual structural ductility factor, μ_{act}, for the system, in order to meet the required strength assessment limit.

If all the four "good features" are present and $\mu_{act} = 1.5$, then no further steps in this evaluation are required and the system passes the evaluation.

If any of the four "good features" are not present and $\mu_{act} = 1.0$, then no further steps in this evaluation are required and the system passes the evaluation.

If neither of these conditions is met, then proceed with the evaluation of the system's response in the inelastic regime in accordance with following sections.

Inelastic deflection limit for system

Absolute limit

This represents the extent of inelastic deflection to which the system is allowed to displace. It is given by the most severe (ie. the lowest limit allowed) of the following:

a. The 2.5% interstorey or building height drift limit given by NZS 4203 Clause 2.5.4.5(b).
b. The inelastic limit associated with avoidance of instability failure in components tied into the steel system, such as masonry walls.

In the case of (a), the 2.5% drift limit is that specified by NZS 4203 for systems analysed by Numerical Integration Time History (NITH) analysis. It is greater than the limits specified by NZS 4203 for equivalent static or modal analysis, because the response in the inelastic range is determined much more accurately by NITH analysis, allowing the lateral displacement limit to be relaxed. The authors consider that the following system checks made in this procedure will ascertain the system's response with similar dependability to a NITH analysis, given the uncertainties in each stage of the assessment, allowing the NITH inelastic drift limit to be used. These system checks involve:

- first yield strength adequacy
- extent of inelastic demand expected
- strength loss in the inelastic range
- ductility capacity of the yielding elements of the system

In the case of (b), the appropriate limit will depend on the position of any masonry walls relative to the steel frame, the nature of connection between wall and frame and the extent (if any) of seismic isolation. The limit must be determined from a rational limit state method of analysis for the masonry wall. For example:

- for connected masonry walls that are perpendicular to the plane of the frame and hence subject to out of plane displacements due to the in-plane frame deformations
- for connected masonry walls parallel to the plane of the frame (e.g. infill panels)

P–Δ OK limit

The P–Δ OK limit of NZS 4203 Clause 4.7.5.1 needs to be determined. This check is only required for systems where μ_{act} exceeds 1.5.

If the strength hierarchy of the system is beam sidesway over all levels, then the P–Δ OK limit need be applied only over the lower half of the MRSF. If the strength hierarchy is column sidesway over any level investigated, then apply P–Δ OK limit over that level as well as over the lower half of the MRSF.

Making allowance for P–Δ actions

This involves determining the inelastic deflection for the system in accordance with NZS 4203 (1992) Clause 4.7.3, taking into account whether the system is a column sidesway system or a beam sidesway system. The structural ductility factor to use for this is μ_{act} for the system. Note that a system may be strong column over some levels and weak column over others, requiring determination of several possible inelastic deflection profiles in order to determine the most critical case(s).

If μ_{act} is greater than 1.5 and the P – Δ OK limit is exceeded, then the effect of P – Δ actions needs to be considered. This can be undertaken (probably conservatively) as follows:

a. Determine the additional lateral forces to apply to the system from NZS 4203 Commentary Clause C4.B2 (NZS 4203:1992)
b. For seismic actions from the required strength assessment level that have been obtained by equivalent static analyses, combine the two sets of lateral forces and recheck the first yield adequacy of the system. This may result in an increase of μ_{act} in order to lower the direct seismic design actions to meet both direct seismic and P – Δ actions.
c. For seismic actions from the required strength assessment level that have been obtained by modal analysis, combine the actions from the P – Δ induced axial forces with the modal analysis actions arising from the first mode response, so that the member moments from each are additive. Recheck the first yield adequacy of the system. This may result in an increase of μ_{act} in order to lower the direct seismic design actions to meet both direct seismic and P – Δ actions.

Where required, the P – Δ actions are determined by the simple pin-jointed model equilibrium procedure of NZS 4203 Figure C4.B1. This model assumes a first mode type displaced shape (ie. all levels displace in the same direction, with the displacement of level i + 1 exceeding that of level i). Hence the actions generated by the design lateral forces should be combined with those generated by first mode modal forces, when a modal analysis is used, so that the cumulative effect of these forces is additive.

Inelastic behaviour of system from a pushover analysis
Model the system in an elastic-plastic push-over analysis and push it to the calculated inelastic displacement. The set of forces used for this are as derived before associated with μ_{act} from that step, plus any P – Δ actions generated. This set of forces is multiplied by a scalar value to push the structure to the required displacement limit.

Track the change in the magnitude of the scalar as the system deflects and determine the inelastic rotation demands on the components of the system.

Check on stiffness, strength and ductility of the system in the inelastic range
For any seismic-resisting system being evaluated, if $\mu_{act} = 1.0$, then the inelastic checks below do not need to be undertaken.

If all the four "good features" from *EVALUATION PROCEDURE: Assessment of Ductility and Good Features* are present in the seismic-resisting system being evaluated and μ_{act} is less than equal to 1.5, then the inelastic checks below do not need to be undertaken.

If either of the above do not apply, then checks for stiffness, strength and ductility of the system in the inelastic range must be undertaken, as follows:

Check on the inelastic stiffness adequacy of the system
This is met if the inelastic deflections calculated are within the inelastic deflection limit.

Check strength of the system in the inelastic range
Compare the maximum value of the scalar determined from the pushover analysis with its value at the attainment of the maximum deflection limit. If the ratio of the latter to the former is greater than 80%, the system has sufficient strength through the inelastic regime of behaviour. If the ratio is less than 80%, then the loss of strength is too much in the inelastic range and steps will need taking to increase the inelastic strength of the yielding regions for the expected rotation demands.

Check ductility capacity of the yielding elements in the system
Compare the inelastic demands with the inelastic rotation capacity for each element of the system. If the capacity is not exceeded for any element, then the system has sufficient ductility capacity. If it is exceeded, then the ductility demand is too high and either the ductility capacity of the relevant components must be increased or the system should be strengthened to reduce the inelastic.

CONCLUSIONS

Experience gained from past earthquakes such as Hyogoken Nanbu (Kobe), Japan and Northridge, US earthquakes identified that poor performances of existing, old MRSF buildings were primarily due to one or more of the following:

- Poor distribution of strength/stiffness over successive storeys, leading to soft storey formation
- Lack of provision for an adequate load path through the connections, leading to partial or complete connection failure, especially loss of vertical load-carrying capacity and/or crippling of he columns
- Inadequate strength and/or stiffness of the overall seismic-resisting system

The pattern of damage from both earthquakes has showed that, for seismic-resisting systems which exhibited inelastic response, three factors are important in order to achieve a good performance of the overall structure:

- The beam-column connections retain their integrity with regard to carrying shear and axial force, if their moment capacity is reduced
- Inelastic demand is minimized in the columns; both member rotational demand due to general plastic hinging and localized deformation due to local buckling or tearing failure
- The inelastic response is essentially symmetrical in nature and does not lead to a progressive displacement of the building in one direction

Based on the above observation on good performance of structures under an earthquake, a simple and easy to adopt method for assessing the seismic resistance of existing MRSF buildings is presented in this paper. It is a two-level procedure. In the first level, the frame system is checked to see whether there is sufficient capacity (first yield) to resist the seismic actions generated by the recommended strength assessment limit, with only very low ductility demand. If the frame system has adequate capacity to satisfy this criterion and exhibits a specified range of "good feature attributes", then it passes the check and no further assessment is required. Otherwise, the second level check has to be carried out to determine strength, stiffness, and ductility of the frame system in the inelastic range. If the frame system fails to pass the second level check as well, then the system needs strengthening.

Although this paper is limited to MRSF structures the proposed guidelines in the Draft NZSEE Recommendations [1] extends to cover MRSF systems with infill panels and braced steel frames.

REFERENCES

1. Draft NZSEE Recommendations, Assessment and Improvement of the Structural Performance of Buildings in Earthquake, 2003.
2. Bussell M. "Appraisal of Existing Iron and Steel Structures", The Steel Construction Institute, Ascot, England, SCI Publication 138, 1997.
3. Hyland C. "Structural Steelwork Connections Guide", HERA, Manukau City, HERA Report R4–100, 2003.
4. Feeney MJ and Clifton GC, "Seismic Design Procedures for Steel Structures", HERA, Manukau City, HERA Report R4–76, 1995.

5. Barker GF, “Assessment of existing structures: a strength limit state appraisal of hot driven rivets”, Steel Construction 34(1): 1–15, March, 2000.
6. Wood PJ, “Cyclic Testing of a Concrete Encased Riveted Beam Column Joint”, Ministry of Works and Development, Wellington, New Zealand, Report Number 5–82/2, 1987.
7. Roeder C, et.al, “Strength, Stiffness and Ductility of Older Steel Structures under Seismic Loading”, University of Washington Department of Civil Engineering, Washington, USA, Report No. SGEM 94–4, 1994.
8. Roeder C, et.al, “Seismic Behaviour of Older Steel Structures”, Journal of Structural Engineering, Vol 122, No 4, April 1996, pp 365 – 373, 1996.
9. Clifton GC, “Tentative guidelines for assessing the seismic performance of pre-1975 moment-resisting steel framed buildings”, HERA Structural Design and Construction Bulletin 18: 1–10, 1996.
10. Clifton GC, “Restraint Classifications for Beam Member Moment Capacity Determination to NZS 3404:1997”, HERA, Manukau City, HERA Report R4–92, 1997.
11. Clifton GC, “Steelwork Limit State Design Guides”, Vol 1. HERA, Manukau City, HERA Report R4–80, 1994.
12. MacRae GA, “The Seismic Response of Steel Frames”, University of Canterbury Research Report 90–6, Christchurch, New Zealand, 1990.
13. Brownlee SA, “Axial Force and Plate Slenderness Effects on the Inelastic Behaviour of Structural Steel Beam-Columns”, University of Canterbury, Christchurch, New Zealand, 1994.