13th World Conference on Earthquake Engineering
Vancouver, B.C., Canada
August 1-6, 2004
Paper No. 2171

Structural Design for Multicomponent Seismic Motion

Oscar A. LÓPEZ[1] and Julio J. HERNÁNDEZ[2]

SUMMARY

This paper aims to discuss structural design procedures for multicomponent seismic motion and to present application examples in structures such as bridges and platforms. The seismic motion is described by the three principal ground acceleration components that can form any angle with the structural axes. The main properties of the principal seismic components, needed to determine the structural response, were identified for an ensemble of 97 earthquake records. One principal component have a mean inclination angle of 11.4° with respect to the vertical axis and a standard deviation of about 10°. Spectral ratios of the minor and the major quasi-horizontal spectra are found to be between 0.63 and 0.87, depending on vibration period *T*. Spectral ratios of the quasi-vertical and the major quasi-horizontal spectra are between 0.3 and 1.33 depending on *T* and the distance to the fault. The CQC3-rule was applied to determine the critical structural response to two seismic components on a vertical plane: a quasi-horizontal and a quasi-vertical component that has an inclination with respect to the vertical axis. The inclination of the quasi-vertical component may significantly increase the response of structures with close periods of vibration, up to 1.37 times the standard SRSS response. The critical response to three seismic components that may have arbitrary directions with respect to the structural axes, including a restriction to the maximum inclination of the quasi-vertical component, was determined using the GCQC3-rule, a generalization of the known CQC3-rule that considers one principal component to be vertical. An upper bound of the critical response is determined by combining the eigenvalues of the response matrix $\boldsymbol{R}$ and the spectral ratios of the three components. When the inclination is considered the critical response can be up to 1.26 times the standard SRSS response for the structures considered.

INTRODUCTION

Earthquake-resistant design requires consideration of multicomponent seismic motion as specified in current building codes [1-3]. Under the framework of the response spectrum method of analysis the seismic components are described in terms of the response spectra associated to the principal directions of ground motion [4,5]. Although there is a great deal of information regarding the properties of the response spectra of the recorded seismic components [6,7], very little information is available concerning the principal components. In a previous study the authors evaluated the properties of the principal spectra, limited to the horizontal components of motion, using a small sample of 17 seismic events finding that the major and minor components have different spectral shapes [8,9]. In preliminary studies using three

[1]Professor, IMME, Engineering School, Central University of Venezuela. oslopez@reacciun.ve.
[2]Associate Researcher, IMME-CDCH-FONACIT; julher@cantv.net

seismic components it was found that the vertical component does not always correspond to a principal direction [10,11].

Since the principal seismic components can form any angle with the structural axes, analysis methods have been developed to determine the critical response that is defined as the largest response among the peak response for all possible angles of incidence [12-16]. These methods usually require knowledge of the spectral ratios of the principal seismic components. The Generalized Complete Quadratic Combination rule with 3 components, the GCQC3-rule, for calculating the critical response to three principal seismic components considering an angular deviation between a principal component and the vertical direction was proposed in [10].

The purpose of this paper is: (i) to present the properties of the principal components of ground motion, (ii) to present application examples in structural design to determine the critical response to two and three principal components of ground motion.

MULTICOMPONENT SEISMIC MOTIONS

Translational ground acceleration during an earthquake is usually recorded along three mutually orthogonal axes that are oriented along two arbitrary horizontal directions and the vertical direction. It is a well-known fact that the recorded components can be rotated to the principal directions along which the correlation between the three components is null [4,5]. Along these directions the acceleration components have the maximum, an intermediate and the minimum quadratic intensity, among all possible directions of the three components in space. Let axes *1*, *2* and *3* define the principal directions of ground acceleration, and axes *x*, *y* and *z* define the directions of the recorded components (Figure 1). Let $\boldsymbol{\sigma}$ be the 3x3 covariance matrix of the three recorded components. The element σ_{ij} of matrix $\boldsymbol{\sigma}$ is given by:

$$\sigma_{ij} = \frac{1}{s}\int_0^s a_i(t)\, a_j(t)\, dt; \qquad i = x, y, z; \qquad j = x, y, z \tag{1}$$

where it has been assumed that the mean values of the acceleration components $a_i(t)$ and $a_j(t)$ of duration *s* are equal to zero. The principal directions (*1*, *2*, *3*) are defined by the eigenvectors of the 3x3 covariance matrix $\boldsymbol{\sigma}$ [4,5]. Direction *3* is defined as the principal direction that is closer to the vertical axis (Figure 1). In this paper component *3* is denoted as the quasi-vertical component, and components *1* and *2* as the quasi-horizontal components of seismic motion. Component *1* is defined as the major quasi-horizontal component, the one that has the largest quadratic intensity given by Eq. (1): $\sigma_{11} > \sigma_{22}$. Component *2* is then defined as the minor quasi-horizontal component. Let ψ be the angle between component *3* and the vertical *z* axis (Figure 1). For the purpose of structural analysis it is usually assumed that principal component *3* is oriented along the vertical direction (i.e., $\psi = 0°$).

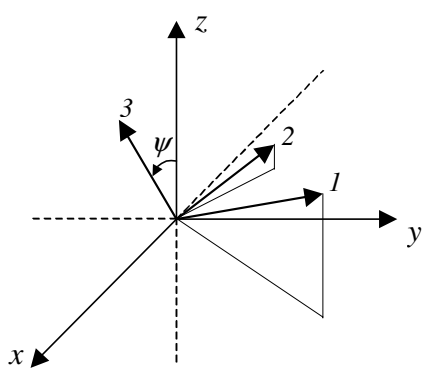

Figure 1. Directions (*x,y,z*) of the recorded ground acceleration and principal directions (*1,2,3*).

The properties of the principal components of ground acceleration were determined for an ensemble of 97 ground motions recorded during 25 world wide earthquakes, having peak accelerations greater than 0.10g [17]. The ensemble was separated in a group of 53 near-fault motions, recorded at distances less than 15 km from the fault trace, and 44 far-fault motions recorded at greater distances.

Inclination of the quasi-vertical seismic component

The value of angle ψ that measures the inclination of the quasi-vertical principal seismic component (Figure 1) was determined for each member of the ensemble of motions. Angle ψ was calculated considering the whole duration of each ground motion. The relative frequency of angle ψ is presented in Figure 2 for near-fault, far-fault and for all ground motions. Contrary to what is usually assumed, the most frequent value (the statistical mode) moves away from zero and is between 5º and 10º for all motions. The average inclination found was 11.4º for the entire ensemble; it was slightly higher for near-fault (12.3º) than for far-fault motions (10.2º), although inclinations of up to 50º may be found in some individual records. The standard deviation is 9.9º for all motions; it was slightly higher for near-fault (11.1º) than for far-fault ground motions (8.3º).

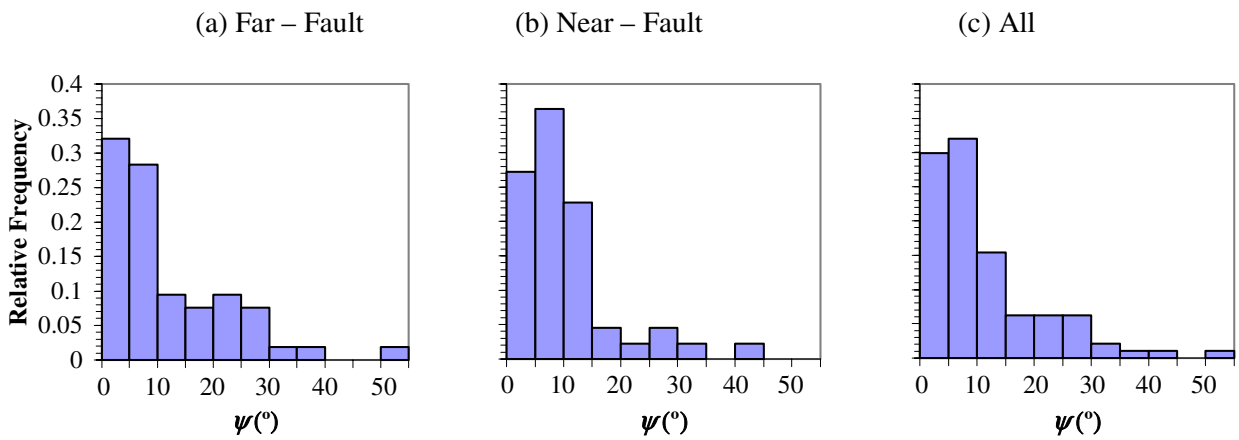

Figure 2. Relative frequency of the inclination angle ψ of the quasi-vertical component.

Mean spectra and spectral ratios of the principal components

Response spectra for 5% damping ratio were calculated for the principal components *1*, *2* and *3* of ground acceleration, for each member of the ensemble of 97 motions. The three principal components of each motion are scaled so that the peak acceleration of component *1* is equal to 1g. Mean seudo-acceleration spectra, $A_1(T)$, $A_2(T)$ and $A_3(T)$, were calculated for the principal components *1*, *2* and *3*, respectively, taking the average of the spectral values across all members of a given group at each vibration period *T*. Figure 3 shows the mean spectra of each principal component for far-fault and near-fault ground motions, in the period range 0-10 seconds. The spectral values of the quasi-horizontal component *2* are always below the quasi-horizontal component *1*, for all period values in each group. The distance to the fault influences the shapes of the major (*1*) and the minor (*2*) quasi-horizontal components; the major component is wider and lower in the near-fault than in the far-fault motions in the short period range ($0.1<T<0.5$ sec). The spectral values of the quasi-vertical component *3* may be above or below the corresponding values of the quasi-horizontal components, depending upon the vibration period *T* and the distance to the fault. For far-fault motions the quasi-vertical component *3* is always below the other components, but may be above the quasi-horizontal components for near-fault motions in the very short period range ($0.03<T<0.15$ sec). Spectral ratios of the two quasi-horizontal components, $\gamma_2(T)=A_2(T)/A_1(T)$, and of the quasi-vertical and the major quasi-horizontal components, $\gamma_3(T)=A_3(T)/A_1(T)$, are also shown in Figure 3. The spectral ratio of the quasi-horizontal components,

$\gamma_2(T)$, varies between 0.63 and 0.87 for both groups of motions. The spectral ratio $\gamma_3(T)$ varies between 0.34 and 0.69 for far-fault motions. For near-fault motions $\gamma_3(T)$ varies between 0.30 and 1.33.

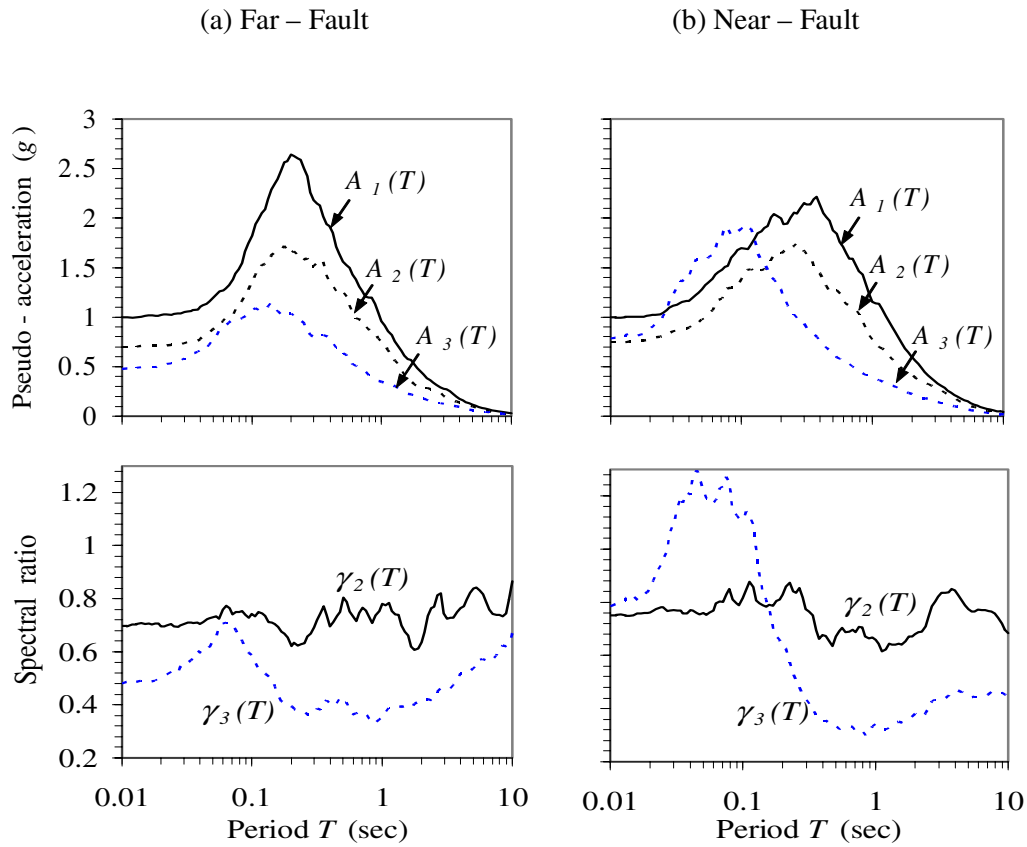

Figure 3. Mean spectra and spectral ratio $\gamma_2(T)= A_2(T)/A_1(T)$ and $\gamma_3(T)= A_3(T)/A_1(T)$ for the principal components of seismic motion for an ensemble of 97 earthquake records [17].

STRUCTURAL RESPONSE TO TWO SEISMIC COMPONENTS ON THE VERTICAL PLANE

Figure 4 shows a structure subjected to the two principal components of ground acceleration: one quasi-horizontal component along direction *1*, and the quasi-vertical component along direction *3*. The angle ψ defines the inclination of the quasi-vertical component with respect to the vertical axis. According to the results presented previously, ψ is assumed to vary between 0° and 20°. We assume that seismic component *2* has no effect on the structural response quantities in consideration, and then it can be ignored in the analysis. The spectra for the quasi-vertical and the quasi-horizontal components are proportional, this is $A_3(T)= \overline{\gamma}_3\ A_1(T)$, where $A_1(T)$ and $A_3(T)$ are the pseudo-acceleration spectra of components *1* and *3*, respectively, and $\overline{\gamma}_3$ is a constant spectral ratio that is independent of vibration period *T*.

Structural response-incident angle relation

Under the framework of the spectrum method of analysis for multicomponent ground motion the structural response can be determined by means of the CQC3-rule that was originally derived for two horizontal components of arbitrary directions on the horizontal plane and the vertical seismic component

[12-16]. However, it is possible to extend the same concepts to the problem of two seismic components on a vertical plane that form a given angle with the structural axes (Figure 4); the peak response r as a function of the incident angle ψ can be written as:

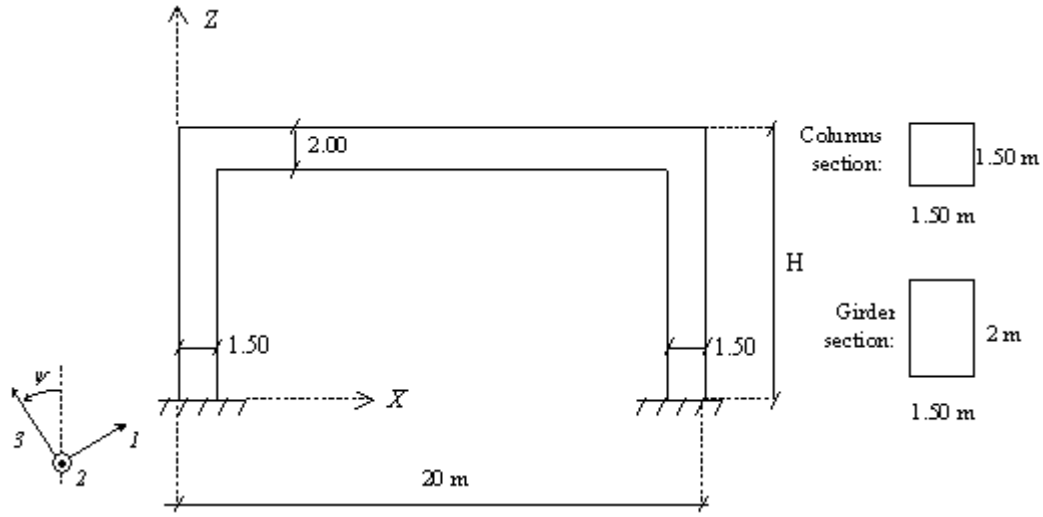

Figure 4. Two–column bent subjected to one quasi–horizontal (direction *1*) and the quasi– vertical (direction *3*) principal seismic components . H = 16.0 m for Bent 1 and 5.4 m for Bent 2.

$$r(\psi)=\left\{\left[r_x^2+\left(\bar{\gamma}_3\, r_z\right)^2\right]\cos^2\psi+\left[r_z^2+\left(\bar{\gamma}_3\, r_x\right)^2\right]sin^2\psi+2\left(1-\bar{\gamma}_3^2\right)\, r_{xz}sin\psi\cos\psi\right\}^{1/2} \tag{2}$$

$$r_x=\left\{\sum_{n=1}^{N}\sum_{m=1}^{N}\rho_{nm}r_{xn}r_{xm}\right\}^{1/2} \qquad r_z=\left\{\sum_{n=1}^{N}\sum_{m=1}^{N}\rho_{nm}r_{zn}r_{zm}\right\}^{1/2} \tag{3a,b}$$

$$r_{xz}=\sum_{n=1}^{N}\sum_{m=1}^{N}\rho_{nm}r_{xn}r_{zm} \qquad \alpha=\frac{r_{xz}}{r_x r_z} \tag{4a,b}$$

where r_x and r_z are the peak values of response quantity r due to a single seismic component defined by the spectrum $A_1(T)$ applied first along the structural axis X and then along the Z axis, respectively, r_{xn} and r_{zn} are the peak response due to the nth natural mode of vibration, and ρ_{nm} is the correlation coefficient for modes n and m; r_x and r_z in Eqs. (3a) and (3b) are determined using the CQC combination rule to take into account correlation between vibration modes [6]. N is the number of modes and r_{xz} is a cross-term of the modal responses that contribute to r_x and r_z. The correlation coefficient of responses r_x and r_z is defined as α in Eq. (4b), which is bounded by $-1\leq\alpha\leq1$ [16]. The CQC3-rule defined by Eq. (2) is a particular case of the GCQC3-rule that is discussed later.

In the traditional standard analysis the seismic components are assumed to have a fixed direction along the structural axes. If the principal seismic components *1* and *3* are applied along the structural axes X and Z, respectively, the peak response is given using Eq. (2) with ψ=0°:

$$r(\psi=0^\circ)=\left\{r_x^2+\left(\bar{\gamma}_3\, r_z\right)^2\right\}^{1/2}=r_{SRSS} \tag{5}$$

This equation is the SRSS combination of responses to the individual components of ground motion, and is denoted as r_{SRSS}. It represents the response when the inclination of the quasi-vertical component is

neglected. The term $\bar{\gamma}_3 r_z = \bar{r}_z$ in Eq. (5) represents the peak response to the vertical component of ground motion (i.e., when the principal quasi-vertical component *3* is applied along the vertical direction).

The peak response *r* given by Eq. (2) is a function of the constant spectral ratio $\bar{\gamma}_3$. Strictly speaking the spectral ratio $\gamma_3(T)=A_3(T)/A_1(T)$ is not a constant and depends on period *T* as discussed earlier (Figure 3). When this spectral ratio is assumed to be a constant, an approximation in the calculation of the peak response is introduced in Eq. (2). It has been shown however that the value given by Eq. (2) gives an adequate approximation of the "exact" peak response provided an appropriate constant value of $\bar{\gamma}_3$ is chosen [18]. One of these values is given by:

$$\bar{\gamma}_3 = \frac{\gamma_3(T_x) + \gamma_3(T_z)}{2} \tag{6}$$

where $\gamma_3(T_x)$ and $\gamma_3(T_z)$ are the values of $\gamma_3(T)$ at vibrations periods T_x and T_z of the modes with the largest participating mass in response to seismic motion along the *X* and *Z* directions, respectively.

The critical response

The critical response, r_{cr}, is defined as the largest value of $r(\psi)$ considering all possible values of incident angle ψ within the range $|\psi| \leq 20°$. Differentiating Eq. (2) with respect to ψ and setting the derivative equal to zero gives:

$$\psi = \frac{1}{2}\tan^{-1}\left\{\frac{2r_{xz}}{r_x^2 - r_z^2}\right\} \tag{7}$$

Eq. (7) gives two values of ψ between 0° and 180°, ψ_a and ψ_b, separated by 90°. When the two values ψ_a and ψ_b are substituted for ψ in Eq. (2), two values of peak response *r* are obtained. The largest of them is defined as r_{max}, and the corresponding angle, ψ_a or ψ_b, is defined as ψ_{max}. Note that r_{max} would be the critical response if no restrictions to the inclination angle ψ were imposed. When a restriction is imposed, the critical response, r_{cr}, and the critical angle, ψ_{cr}, are determined from,

$$r_{cr} = r_{max} \text{ and } \psi_{cr} = \psi_{max}, \text{ if } \left|\psi_{\max}\right| \leq 20^\circ \tag{8a}$$

$$r_{cr} = \max\,[r(\psi=20°); r(\psi=-20°)] \text{ and } \psi_{cr} = +20° \text{ or } -20°, \text{ if } \left|\psi_{\max}\right| > 20^\circ \tag{8b}$$

The critical values of all response quantities, r_{cr}, have been proposed as design values because they have a similar probability of exceedence when all possible inclinations of the principal seismic components are considered.

Example of application

Figure 4 shows the geometry and section dimensions of a two-column bent that is one of several similar bents that support a cast-in-place girder bridge. Transverse joints are provided at each bent of this regular bridge. Two different bridges and bents are considered: Bent 1 with a height H=16 m and Bent 2 with H=5.4 m. The lumped weights for each bent that includes the contribution of the deck are shown in Figure 5. Total weights are 1053 and 960 tons for Bents 1 and 2, respectively. Vibration periods and participating masses for the significant modes are shown in Tables 1 and 2 for Bents 1 and 2, respectively. The shapes of those vibration modes are shown in Figure 6.

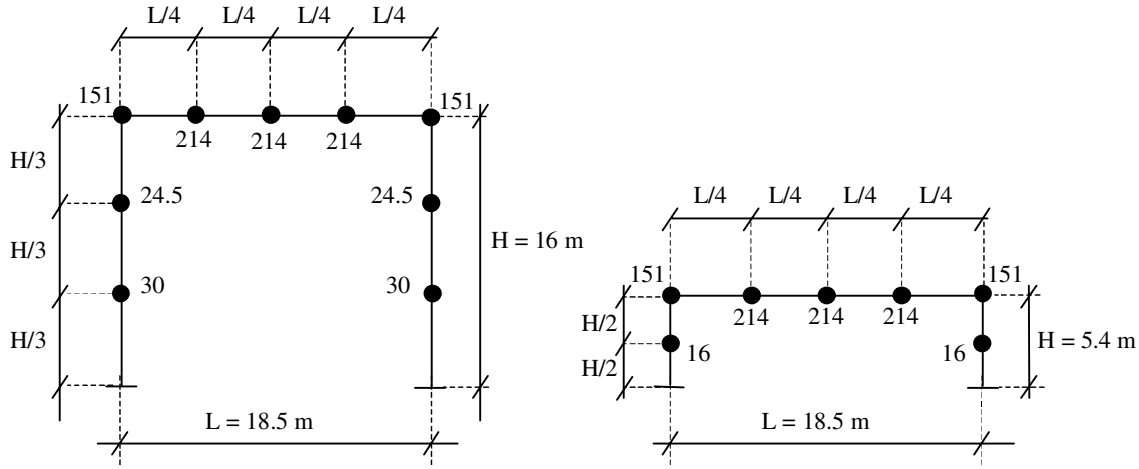

a) Bent 1 b) Bent 2

Figure 5. Lumped weights (tons) and dimensions of Bents 1 and 2.

Table 1. Modal values of significant modes for Bent 1

Mode	Period *T* (sec)	Participating mass (%)	
		X	*Z*
1	0.928	95.88	0.00
2	0.287	0.00	60.96
5	0.057	2.75	0.00
6	0.052	0.00	18.21
8	0.038	0.00	17.98

Table 2. Modal values of significant modes for Bent 2

Mode	Period *T* (sec)	Participating mass (%)	
		X	*Z*
1	0.205	96.58	0.00
2	0.201	0.00	65.98
3	0.071	2.33	0.00
4	0.040	0.00	5.94
6	0.022	0.00	27.29

Each bent is subjected to the quasi-horizontal seismic component given by the design spectra $A_1(T)$ (Figure 7(a)) and the quasi-vertical component defined by its spectral ratio $\gamma_3(T)= A_3(T)/A_1(T)$ (Figure 7(b)), which were obtained from the mean spectra for far-fault ground motions (Figure 3(a)) as described in [17]. The quasi-horizontal component *1* has been scaled so that $A_1(T=0)$=0.30 g. The two orthogonal seismic components may act at any inclination ψ with respect to the structural axes as long as $|\psi| \leq 20°$ (Figure 4).

The response quantities to be calculated are the moment at the top, M_t, and the moment, M_b, the shear force, V_b, and the axial force, N_b, at the bottom of the left column, and the shear force at the middle of the girder, V_g (Figure 4). The critical value of each response quantity was determined as indicated previously. Eq. (6) is used to calculate the constant spectral ratio $\overline{\gamma}_3$: For Bent 1, T_x=0.928 s and T_z =0.287 s (Table 1); from Figure 7, $\gamma_3(T_x)$=0.37, and $\gamma_3(T_z)$=0.39. Therefore $\overline{\gamma}_3$=0.38. For Bent 2, T_x=0.205 and T_z=0.201

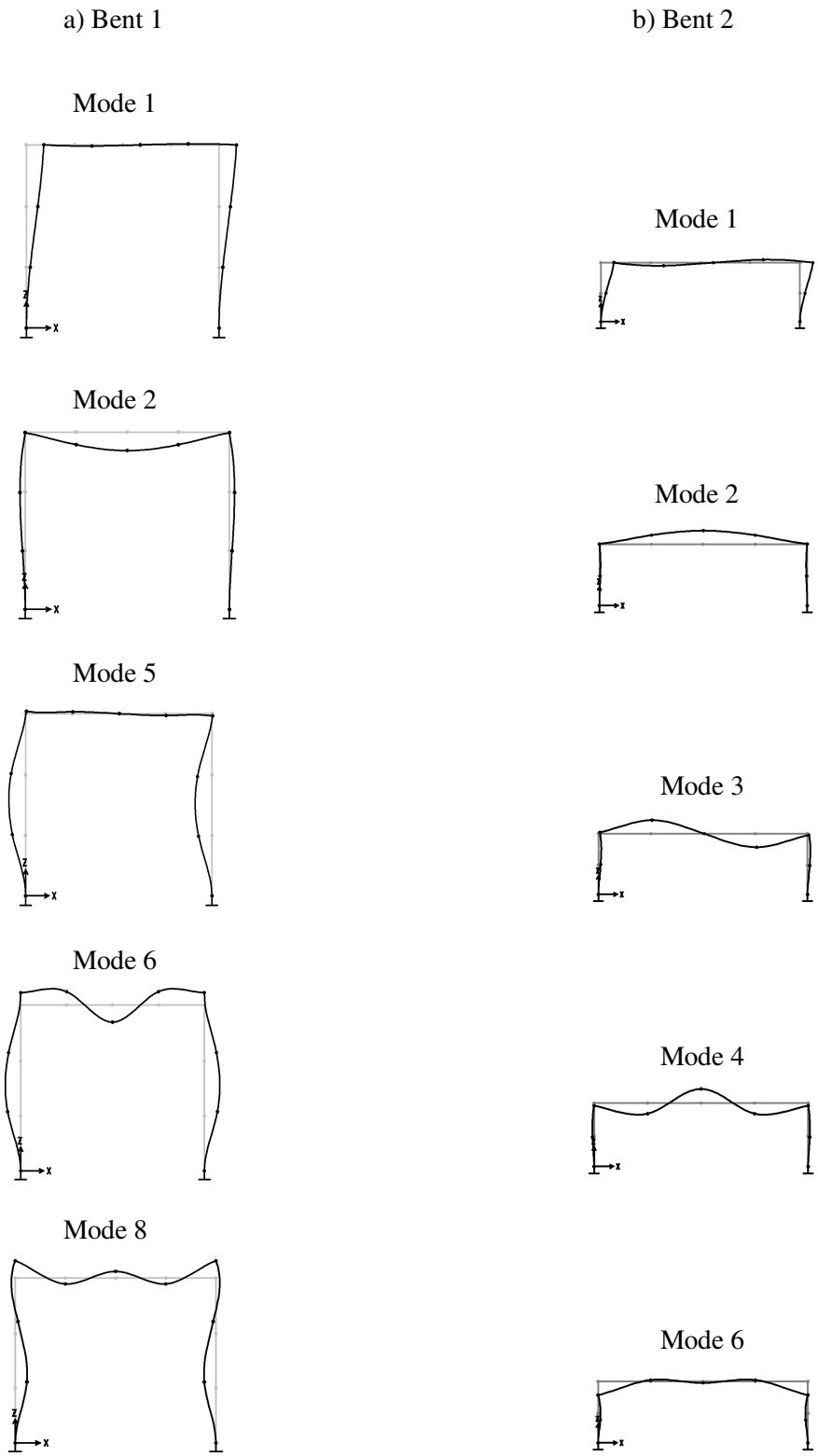

Figure 6. Shapes of significant vibration modes for Bents 1 and 2.

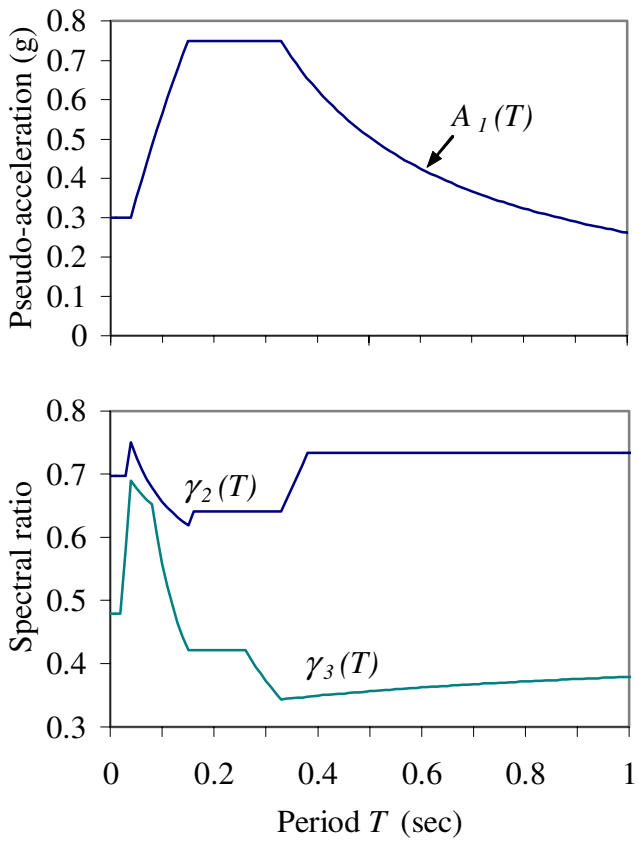

Figure 7. Design pseudo-acceleration spectra for the principal quasi-horizontal component (*1*) and spectral ratios $\gamma_2(T)$ and $\gamma_3(T)$, for Far-fault seismic motions [17].

(Table 2); following a similar procedure as for Bent 1, $\bar{\gamma}_3$=0.42. A summary of response values is presented in Table 3 for Bent 1 and in Table 4 for Bent 2. The ratio r_{SRSS}/r_x measures the influence of the vertical seismic component in the standard analysis because it is calculated as the ratio of the combined response to the horizontal and vertical seismic components (Eq. (5)) divided by the response to the horizontal component only (Eq.(3a)). Similarly, the ratio r_{cr}/r_x measures the effect of the quasi-vertical seismic component with its inclination ψ, relative to the response to the horizontal component only, and the ratio r_{cr}/r_{SRSS} measures the effect of the inclination ψ on the response to the two seismic components. The values shown in Tables 3 and 4 for the ratio r_{SRSS}/r_x point out that in the standard analysis (ψ=0°) of this structure the vertical component has a significant effect only for the axial force at the column, especially for Bent 2 where there is an increase of 88% due to the short period of its predominant vibration mode. When an inclination ψ of the vertical seismic component is allowed, the effect of this quasi-vertical component is more significant, relative to the horizontal one, as shown for the values of r_{cr}/r_x; an increase of 52% in the axial force of Bent 1 and an increase of 158% in the axial force of Bent 2.

Table 3. Response values for Bent 1

Force (tons) Moment (tons-meter)	r_x	r_z	$\bar{r}_z$	α	ψ_{cr}	r_{cr}	r_{SRSS}	$\frac{r_{SRSS}}{r_x}$	$\frac{r_{cr}}{r_x}$	$\frac{r_{cr}}{r_{SRSS}}$
M_t	959.0	579.9	221.5	5.29_{X10}^{-3}	0.29°	984.2	984.2	1.03	1.03	1.00
M_b	1270.5	312.1	119.2	4.94_{X10}^{-3}	0.07°	1276.1	1276.1	1.00	1.00	1.00
V_b	142.3	60.8	23.2	3.48_{X10}^{-3}	0.10°	144.1	144.1	1.01	1.01	1.00
N_b	103.0	245.7	93.8	2.81_{X10}^{-3}	20°	156.3	139.3	1.35	1.52	1.12
V_g	105.6	102.0	39.0	-4.54_{X10}^{-3}	-3.76°	112.5	112.5	1.07	1.07	1.00

Table 4. Response values for Bent 2

Force (tons) Moment (tons-meter)	r_x	r_z	$\bar{r}_z$	α	ψ_{cr}	r_{cr}	r_{SRSS}	$\frac{r_{SRSS}}{r_x}$	$\frac{r_{cr}}{r_x}$	$\frac{r_{cr}}{r_{SRSS}}$
M_t	731.2	662.6	279.6	0.962	20°	922.0	782.8	1.07	1.26	1.18
M_b	1133.1	279.9	118.1	0.963	13.43°	1165.3	1139.3	1.01	1.03	1.03
V_b	347.5	175.0	73.9	0.963	20°	385.3	355.3	1.02	1.11	1.08
N_b	63.7	240.8	101.6	0.921	20°	164.5	120.0	1.88	2.58	1.37
V_g	97.2	101.3	42.8	-0.953	-20°	127.7	106.1	1.09	1.31	1.20

The effect of the inclination of the two seismic components, relative to the standard analysis, is given by the values of r_{cr}/r_{SRSS}. For most response quantities in Bent 1, the critical angle, ψ_{cr}, is very small and the critical response r_{cr} is very similar to the SRSS response, r_{SRSS}. The only exception is the axial force, N_b, where the critical angle is 20° and the critical response is 1.12 times the SRSS response. The results for Bent 2 presented in Table 4 point out the greater significance of the inclination ψ of the quasi-vertical component in relation to Bent 1. The critical angle is ±20° for most of the response quantities in Bent 2 and the critical response is larger than the SRSS response; the largest difference occurs for the axial force, N_b, where the critical response is 1.37 times the SRSS response. The greater importance of the inclination ψ for Bent 2 can be explained as follows: modes 1 and 2, which are the most significant modes for horizontal and vertical seismic motion, respectively, have a high degree of correlation, pointed out for the values of the correlation coefficient α in Table 4, because the period values of the significant modes are very close. When one component acts with an inclination with respect to the structural axes, both modes 1 and 2 are excited increasing the combined response because their high correlation. This effect does not show up in Bent 1 because the low correlation of vibration modes (Table 3) due to the well separated values of the vibration periods (Table 1).

STRUCTURAL RESPONSE TO THREE SEISMIC COMPONENTS

Structural response-incident angle relation

Let (*1*, *2*, *3*) be the principal directions of the three seismic components that form angles θ, φ and ψ with respect to structural axes (*X*, *Y*, *Z*) (Figure 8). Let $A_1(T)$, $A_2(T)= \bar{\gamma}_2 A_1(T)$ and $A_3(T)= \bar{\gamma}_3 A_1(T)$ be the pseudo-acceleration response spectra of components *1*, *2*, *3*, respectively, which have the same shape; $\bar{\gamma}_2$ and $\bar{\gamma}_3$ are the constant spectral ratios for components *2* and *3*, respectively, which can be calculated as the mean values for the corresponding spectral ratios of the significant vibration modes of the structure, in a similar way as presented in [18] for two seismic components:

$$\bar{\gamma}_2 = \frac{\gamma_2(T_x) + \gamma_2(T_y) + \gamma_2(T_z)}{3} \tag{9a}$$

$$\bar{\gamma}_3 = \frac{\gamma_3(T_x) + \gamma_3(T_y) + \gamma_3(T_z)}{3} \tag{9b}$$

where T_x, T_y and T_z are the periods of the modes with the largest participating mass in response to seismic motion along the X, Y and the Z directions, respectively

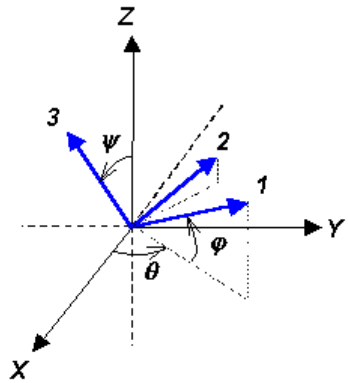

Figure 8. Principal directions of seismic motion (*1*,*2*,*3*) and structural axes (*X*,*Y*,*Z*).

The response matrix $\mathbf{R} = \left[r_{pq} \right]$ is defined as [10]:

$$\mathbf{R} = \begin{bmatrix} r_{xx} & r_{xy} & r_{xz} \\ r_{yx} & r_{yy} & r_{yz} \\ r_{zx} & r_{zy} & r_{zz} \end{bmatrix} \tag{10}$$

where: $$r_{pq} = \sum_{n=1}^{N}\sum_{m=1}^{N} \rho_{nm} r_{pn} r_{qm} \qquad (p = X,\ Y \text{ or } Z);\ (q = X,\ Y \text{ or } Z) \tag{11}$$

The diagonal elements, $r_{xx} = r_x^2$, $r_{yy} = r_y^2$ and $r_{zz} = r_z^2$, are the squares of the peak responses when seismic component *1* is applied alternately along the structural axes (X, Y, Z), respectively. The off-diagonal elements are cross-terms of peak responses r_x, r_y and r_z. $\boldsymbol{R}$ is a symmetric matrix.

The peak response to the simultaneous application of the three seismic components *1*, *2* and *3* (Figure 8) can be written as a function of angles (θ, φ, ψ) and matrix $\boldsymbol{R}$ [10]:

$$r(\theta,\varphi,\psi) = \sqrt{\sum_{k=1}^{3} \bar{\gamma}_k^2 \mathbf{u}_k^T \mathbf{R} \mathbf{u}_k} \tag{12}$$

where $\bar{\gamma}_1 = 1$ and $\boldsymbol{u_1}$, $\boldsymbol{u_2}$ and $\boldsymbol{u_3}$ are unit vectors along directions *1*, *2* and *3*, respectively, which can be expressed as a function of angles (θ, φ, ψ):

$$\begin{aligned} \mathbf{u}_1 &= \{\cos\theta\cos\varphi \quad \sin\theta\cos\varphi \quad \sin\varphi\}^T \\ \mathbf{u}_2 &= \{-\sin\theta\sec\varphi\cos\psi - \Lambda\cos\theta\sin\varphi \quad \cos\theta\sec\varphi\cos\psi - \Lambda\sin\theta\sin\varphi \quad \Lambda\cos\varphi\}^T \\ \mathbf{u}_3 &= \{-\cos\theta\tan\varphi\cos\psi + \Lambda\sin\theta \quad -\sin\theta\tan\varphi\cos\psi - \Lambda\cos\theta \quad \cos\psi\}^T \end{aligned} \tag{13a,b,c}$$

where $$\Lambda = \pm\cos\psi\sqrt{\tan^2\psi - \tan^2\varphi} \tag{14}$$

Eq. (14) shows that $|\tan\psi| \geq |\tan\varphi|$, for any set of orthogonal axes. For each set of angles $(\theta,\ \varphi,\ \psi)$ there exists two solutions for the unit vectors ($\mathbf{u}_1, \mathbf{u}_2, \mathbf{u}_3$), as becomes evident from the two signs in Eq. (14). Both solutions must be considered by means of replacing the two values of Λ given by Eq. (14) into Eqs. (13), and then into Eqs. (12) to calculate two values of r. We select the largest of them.

The formula given by Eq. (12) is the Generalized Complete Quadratic Combination Rule for 3 components, GCQC3, a generalization of the CQC3 rule (Eq. (2)), where the three principal seismic components can adopt any direction in space.

In the standard analysis the three seismic components are assumed to have a fixed direction along the structural axes. If seismic components (*1*, *2*, *3*) are applied along axes (*X*, *Y*, *Z*), respectively, then $\theta=\varphi=\psi=0°$ (Figure 8) and the unit vectors given by Eqs. (13) are $\boldsymbol{u_1}=\{1,0,0\}$, $\boldsymbol{u_2}=\{0,1,0\}$ and $\boldsymbol{u_3}=\{0,0,1\}$. When these vectors are substituted in Eq. (12), the GCQC3 response becomes the standard SRSS response:

$$r(\theta=0^\circ,\varphi=0^\circ,\psi=0^\circ)=\left\{r_x^2+(\bar{\gamma}_2 r_y)^2+(\bar{\gamma}_3 r_z)^2\right\}^{1/2}=r_{SRSS} \tag{15}$$

Critical response

The critical response, r_{cr}, is defined as the largest value of r (Eq. (12)) for all possible values of angles θ, φ and ψ, within the range $|\psi| \leq 20°$ in order to include the restriction to the maximum inclination of the quasi-vertical component. The critical response is obtained by means of numerical variation of angles θ, φ and ψ in Eq. (12):

$$r_{cr}=\max_{\theta,\varphi,\psi}\left\{r(\theta,\varphi,\psi)\right\};\ |\psi|\leq 20^\circ \tag{16}$$

An upper bound of the critical response is given by [10]:

$$r_{cr}\leq\left\{\lambda_1+\bar{\gamma}_2^2\lambda_2+\bar{\gamma}_3^2\lambda_3\right\}^{1/2} \tag{17}$$

where $\lambda_1 \geq \lambda_2 \geq \lambda_3$ are the eigenvalues of matrix $\boldsymbol{R}$ (Eq. (10)). The right-hand term within the parenthesis of Eq. (17) represents the critical response if we do not impose any restriction to the values of the inclination ψ of the quasi-vertical seismic component *3*. The eigenvectors of matrix $\boldsymbol{R}$ define the three directions along which the seismic components lead to the maximum (or critical), the minimum and an intermediate response.

Example

Figure 9 shows a reinforced-concrete-square-platform consisting of a slab, four beams and four columns, which supports an uniform distributed load of 5.15 kN/m^2 and a concentrated load at the center of 106 kN. The structure is subjected to three seismic components that can adopt any direction in space as long as $|\psi| \leq 20°$ (Figure 8): the quasi-horizontal component *1* is given by the design spectrum $A_1(T)$ shown in Figure 9. The periods of the first three vibration modes are 0.176, 0.176 y 0.174 seconds, corresponding to translation along directions *X*, *Y* and *Z*, respectively, which are the modes with the largest participating mass to seismic motion along directions *X*, *Y* and *Z*, respectively. The quasi-horizontal component *2* and the quasi-vertical component *3* are represented by the constant spectral ratios , $\bar{\gamma}_2=0.65$ and $\bar{\gamma}_3=0.50$.

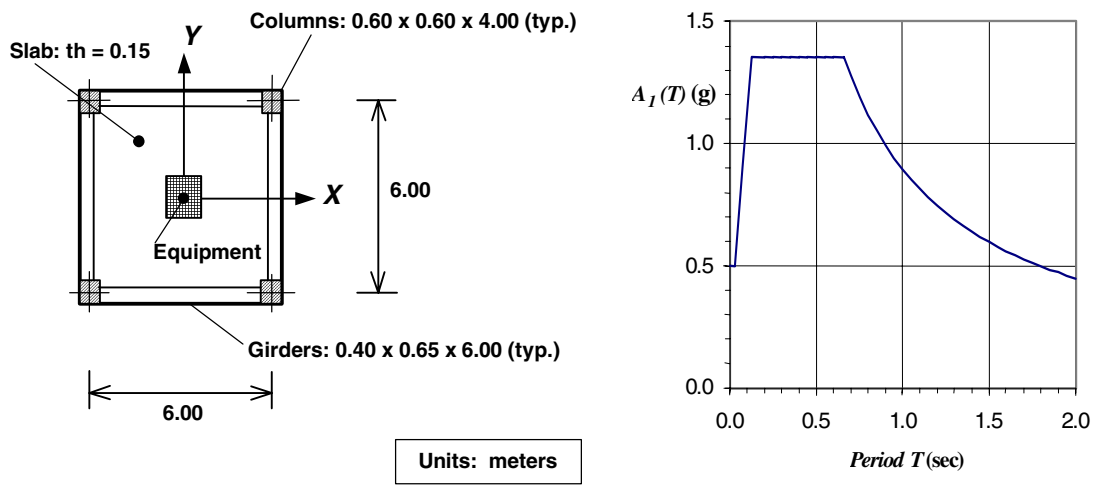

Figure 9. Structural plan of platform and design pseudo-acceleration spectrum for the principal quasi-horizontal component (*1*).

The response quantity, *r*, to be determined is the peak axial force of the lower left column shown in Figure 9. The response matrix ***R*** given by Eqs. (10) and (11) is:

$$\mathbf{R} = \begin{bmatrix} 11209 & 11209 & 7908 \\ 11209 & 11209 & 7908 \\ 7908 & 7908 & 7585 \end{bmatrix} \quad (\mathrm{kN}^2) \tag{18}$$

Therefore $r_x = \sqrt{r_{xx}} = 105.87\ kN$, $r_y = \sqrt{r_{yy}} = 105.87\ kN$ and $r_z = \sqrt{r_{zz}} = 87.09\ kN$, are the peak responses to seismic component *1* applied alternately along the structural axes *X*, *Y* and *Z*, respectively.

Figure 10 shows the variation of the peak axial force with angles θ, φ and ψ, which was calculated by a numerical sweep at 5° interval using Eqs. (12) and (13), with the restriction $|\psi| \leq 20°$. The ranges of θ and φ are: $0° \leq \theta \leq 360°$ and $|\varphi| \leq |\psi|$. The largest value is found to be r_{cr} =168.53 kN for θ=45°, φ=20° and ψ=20°, which is the critical response according to Eq. (16). The eigenvalues of ***R*** are λ_1 = 28421, λ_2 = 1582 and λ_3 = 0 kN^2. An upper bound of the critical response is obtained from Eq. (17), $r_{cr} \leq 170.55$kN, which is only 1.2% larger than the critical response.

The SRSS response, which does not consider the inclination of the three seismic components, is given by Eq. (15): $r_{SRSS} = \left\{105.87^2 + (0.65x105.87)^2 + (0.50x87.09)^2\right\}^{1/2} = 133.57\ kN$. Therefore the inclination of the seismic components gives a critical response that is 26% larger than the SRSS response.

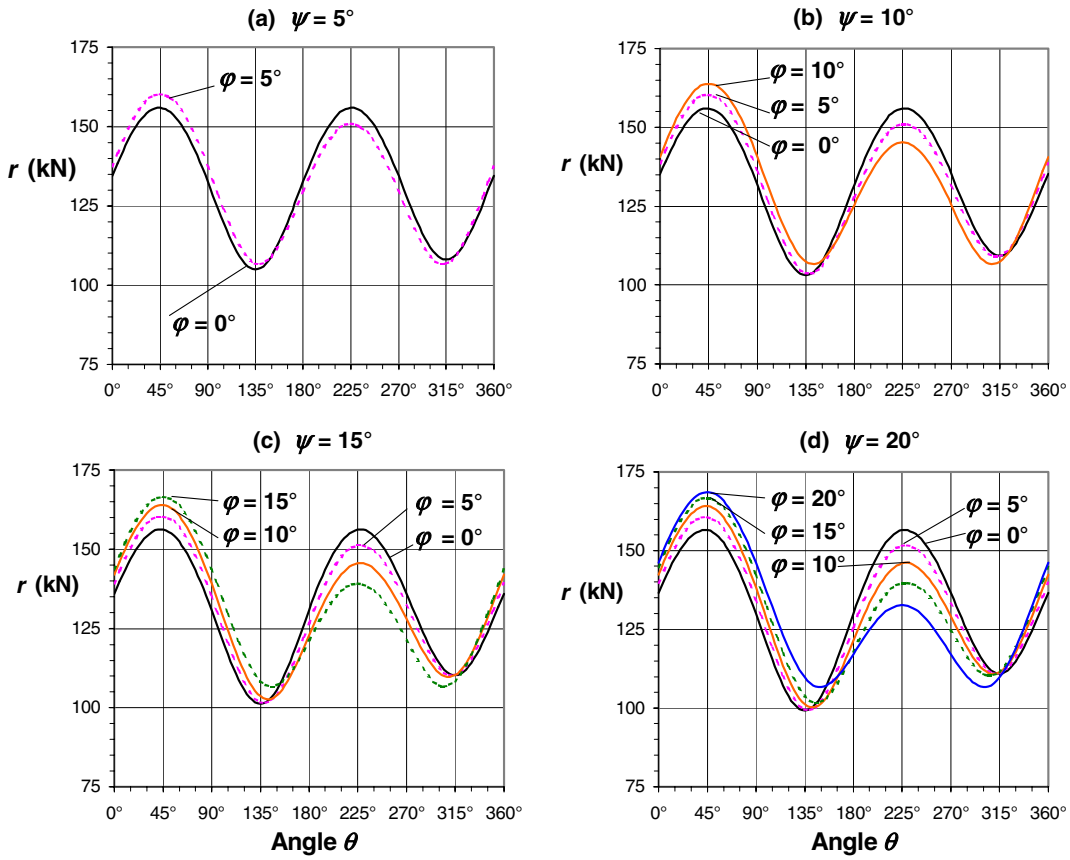

Figure 10. Peak axial force *r* as a function of incident angles *θ, φ* and *ψ* of the three principal seismic components, with the restriction *ψ* ≤ 20°.

CONCLUSIONS

1- The average inclination of the principal quasi-vertical seismic component is 11.4º, with a standard deviation of 9.9º, for an ensemble of 97 earthquake records. The pseudo-acceleration spectral values of the minor quasi-horizontal are below the major quasi-horizontal component for all period values in the range 0-10 seconds, with spectral ratios, $\overline{\gamma}_2$, between 0.63 and 0.87. The spectral values of the quasi-vertical component *3* may be above or below the corresponding values of the quasi-horizontal components, depending upon the vibration period *T* and the distance to the fault. For far-fault motions the quasi-vertical component is always below the quasi-horizontal components, but may be above them for near-fault motions in the very short period range (0.03<*T*<0.15 sec). Spectral ratios between the quasi-vertical and the major quasi-horizontal component, $\overline{\gamma}_3$, varies between 0.34 and 0.69 for far-fault motions and 0.30 and 1.33 for near-fault motions.

2- The CQC3-rule was applied to determine the critical response to two seismic components on a vertical plane: a quasi-horizontal and a quasi-vertical component that has an inclination with respect to the vertical axis. The inclination of the quasi-vertical component may significantly increase the response of structures with close periods of vibration, in relation to the usual assumption that considers this component to be vertical. For the bridges analyzed using the above spectral ratios and considering a maximum inclination of 20°, the critical response can be as large as 1.37 the standard SRSS response that does not consider the inclination of the quasi-vertical component.

3- The GCQC3-rule provides a method to calculate the critical response to three seismic components that can adopt any direction with respect to the structural axes, including a restriction to the maximum

inclination of the quasi-vertical component. An upper bound of the critical response is determined by combining the eigenvalues of the response matrix $\boldsymbol{R}$ and the spectral ratios of the three components. For the example presented the critical response was found to be 1.26 times the standard SRSS response. The upper bound was found to be very close to the critical response.

ACKNOWLEDGEMENT

This research was founded by FONACIT, Project S1-2000000606, Ministry of Science and Technology, CDCH Project PG-08-31-4690-2002 and IMME of the Central University of Venezuela.

REFERENCES

[1] International Conference of Building Officials (ICBO). *Uniform Building Code*, Volume 2, Structural Engineering Design Provisions, Whittier, CA, 1997.

[2] International Code Council, Inc. (ICC). International Building Code, Birmingham, AL, 2000.

[3] COVENIN. *Edificaciones Sismorresistentes*, Norma Venezolana COVENIN 1756, 2001.

[4] Penzien J. and Watabe M. "Characteristics of 3-dimensional Earthquake Ground Motion," *Earthq. Engng. Struc. Dyn.*, 1975; 3:365-374.

[5] Clough RW, Penzien J. Dynamics of Structures, 2nd Edition, McGraw-Hill, Inc, 1993.

[6] Chopra AK. *Dynamics of Structures: Theory and Applications to Earthquake Engineering*, 2nd ed., Prentice Hall, Saddle River, NY, 2001.

[7] Bozorgnia Y, Campbell KW, Niazi M. "Observed spectral characteristics of vertical ground motion recorded during worldwide earthquakes from 1957 to 1995". 12th WCEE 2671/4, New Zealand, 2000.

[8] López OA, Hernández JJ, Raven E. "Espectros de las componentes horizontales principales del movimiento sísmico". Fac. de Ing., Universidad Central de Venezuela, 2002; 17, Nº2. (In Spanish).

[9] López OA, Hernández JJ. Response Spectra for Two Horizontal Seismic Components and Evaluation of the CQC3-rule. *Seventh U.S. National Conference on Earthq. Enginee.*, Boston, 2002.

[10] Hernández JJ, López OA. "Response to three-component seismic motion of arbitrary direction". *Earthq. Engng. Struc. Dyn.* 2002; Vol 31, Number 1, 55-78.

[11] Bonilla R, López OA, Fernández AE. "Características de los movimientos sísmicos según sus tres direcciones principales". VI Cong. Mét. Num. Ing. y Cienc. Apl., Caracas 2002. (In Spanish).

[12] Smeby W, Der Kiureghian A. "Modal Combination Rules for Multicomponent Earthquake Excitation," *Earthq. Engng. Struc. Dyn.*, 1985; 13:1-12.

[13] López, OA, Torres R. "The Critical Angle of Seismic Incidence and the Maximum Structural Response," *Earthq. Engng. Struc. Dyn.*, 1997; 26:881-894.

[14] Menun C, Der Kiureghian A. "A Replacement for the 30%, 40% and SRSS Rules for Multicomponent Seismic Analysis," *Earthq. Spectra*, 1998; 14(1):153-156.

[15] Anastassiadis K, Avramidis IE, Panetsos PK. "Earthquake resistant design of structures under three-component orthotropic seismic excitation". 11th Europ. Conf. on Earthq. Eng., France, 1998.

[16] López OA, Chopra AK, Hernández JJ. "Critical Response of Structures to Multicomponent Earthquake Excitation," *Earthq. Engng. Struc. Dyn.*, 2000; Vol 29, No 12, 1759-1778.

[17] López OA, Bonilla R, Hernández JJ, Fernández A. "Propiedades de las tres componentes principales del movimiento sísmico". Boletín Técnico IMME, 2004. (To be published, in Spanish).

[18] López OA, Chopra AK, Hernández JJ. "Adapting the CQC3-Rule for Three Seismic Components with different Spectra". Journal of Structural Engineering, ASCE, 2004; Volume 130, 3.