13th World Conference on Earthquake Engineering
Vancouver, B.C., Canada
August 1-6, 2004
Paper No. 2146

MULTI-AXIAL SUBASSEMBLAGE TESTING (MAST) SYSTEM: DESCRIPTION AND CAPABILITIES

Catherine W. FRENCH*[1], Arturo E. SCHULTZ[2], Jerome F. HAJJAR[2], Carol K. SHIELD[2], Douglas W. ERNIE[3], Robert J. DEXTER[2], David H.-C. DU[4], Steven A. OLSON[5], Drew J. DAUGHERTY[6], Chen P. WAN[7]

SUMMARY

This paper describes the features and capabilities of the Multi-Axial Subassemblage Testing (MAST) System at the University of Minnesota, which is one of the large-scale testing facilities awarded under the George E. Brown, Jr. Network for Earthquake Engineering Simulation program, funded through the National Science Foundation. The MAST system enables multi-axial quasi-static cyclic tests of large-scale structural subassemblages including portions of beam-column frame systems, walls, and bridge piers. One of the key features of the system is the employment of an advanced six-degree-of-freedom controller, which can be used to apply deformations and loading in a straightforward and reproducible manner, including the capability for mixed-mode control. The system also features state-of-the-art telepresence capabilities to collect sensor data, still camera images, streaming video and audio data. The MAST system advances the current state of technology by allowing the experimental simulation of complex boundary effects through its multi-axial capabilities, which can impose multiple-degree-of-freedom states of deformation and load. The system is unique in size and scope and will greatly expand the large-scale earthquake experimentation capabilities both nationally and internationally.

[1] Professor, Department of Civil Engineering, University of Minnesota, 122 CivE Bldg., 500 Pillsbury Dr. S.E., Minneapolis, Minnesota 55455, phone: 612-625-3877, fax: 612-626-7750 e-mail:cfrench@umn.edu
[2] Associate Professor, Department of Civil Engineering, University of Minnesota, Minneapolis, Minnesota 55455
[3] Associate Professor, Department of Electrical and Computer Engineering, University of Minnesota, Minneapolis, Minnesota 55455
[4] Professor, Department of Computer Science and Engineering, University of Minnesota, Minneapolis, Minnesota 55455
[5] Research Associate, Department of Civil Engineering, University of Minnesota, Minneapolis, Minnesota 55455
[6] Research Coordinator, Department of Civil Engineering, University of Minnesota, Minneapolis, Minnesota 55455
[7] Research Fellow, Department of Civil Engineering, University of Minnesota, Minneapolis, Minnesota 55455

INTRODUCTION

On October 1, 1999, the National Science Foundation (NSF) initiated the George E. Brown, Jr. Network for Earthquake Engineering Simulation (NEES). With this program, the U.S. federal government provided an unprecedented commitment to the advancement of earthquake engineering research. The objective of the program was to develop a network of advanced integrated and interconnected facilities to transform earthquake engineering research so that it relies on the integration and coordination of experimentation, computation, and model-based simulation. Through NEES, fifteen geographically distributed laboratories are integrated and interconnected through Internet2 to facilitate collaboration and to readily make these resources available to institutions that otherwise do not have access to experimental facilities.

One of the key features of NEES is the development and maintenance of a national curated searchable data repository that will contain a complete archive of the visual, sensor, and simulation data obtained through NEES-funded proposals. This information can assist researchers, practicing engineers, and the general public in understanding behavior of structural systems, soils and tsunami due to the effects of earthquakes. The data repository will also be used as a resource for calibration of numerical simulations, as past experimental results will be readily accessible for the validation of new numerical models as they develop.

Digital technology initiatives are core to NEES and include *Data Storage, Analysis and Visualization*; *Telecommunications, Advanced Networking*; *and Internet Technologies* for real-time local and remote interactive access to massive distributed data sets; and *High Performance and Scientific Computation* to enable model-based simulation. The laboratories will be operated as a 50%-time shared-use network available to researchers throughout the United States from 2004-2014, thus providing broad access to the equipment and the resulting experimental and numerical data.

The development of the NEES collaboratory has been a five-year, $82 Million [USD] effort that funded three primary activities: 1) the development of the fifteen shared-use equipment sites (including large-scale structural testing facilities, shake table facilities, field testing equipment, centrifuges, etc.); 2) the development of telepresence features that ensure secure remote access to the equipment sites and the national curated searchable data repository through the efforts of the System Integration Team; and 3) the development of NEES, Inc., the community-developed organization which will manage the NEES resources for the ten years of shared-use access, 2004-2014, which was led by the Consortium Development Team.

Figure 1 shows a schematic of the organizational structure of NEES. The National Science Foundation (NSF) provides the funds for the management, operation and maintenance costs of NEES to ensure the shared-use. NSF also issues the request for proposals and provides peer review evaluation of the proposals. The NEES Consortium, Inc., is responsible for the management oversight and scheduling of the NEES resources. The consortium develops the policies (e.g., for data sharing and shared use access) and the criteria to evaluate performance. In addition, the consortium is responsible for providing central services including the management of the national curated data repository, and it distributes the management, operation and maintenance funds to the individual equipment sites. The individual equipment sites are responsible for ensuring shared-use access, managing, operating and maintaining the local resources, and assisting potential users with proposal development and training.

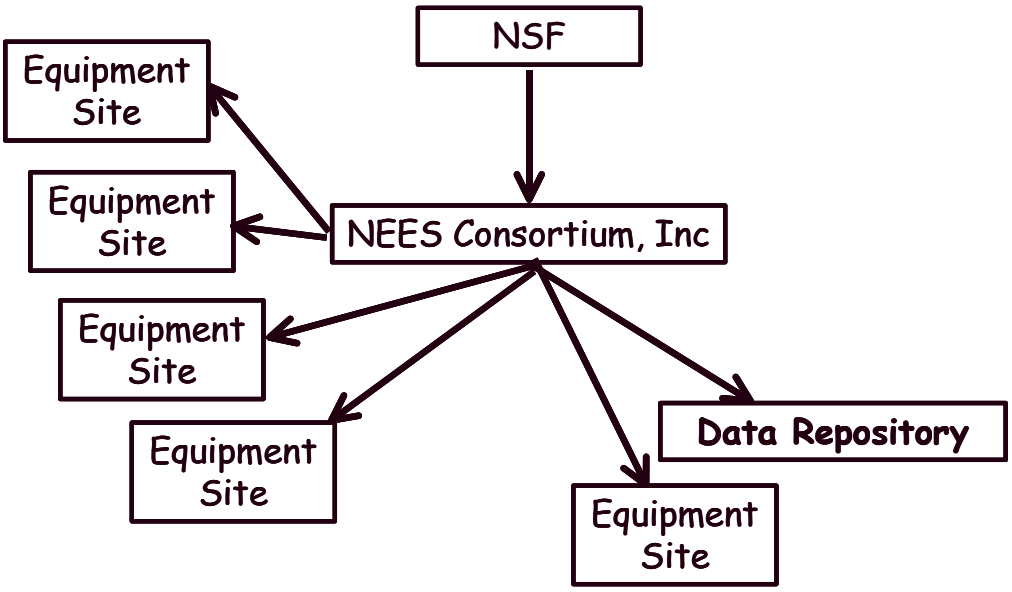

Figure 1 NEES Organizational Structure

The geographical distribution of the fifteen equipment sites is shown in Figure 2. The equipment sites offer a broad range of resources in five categories including large-scale structural testing facilities, shake tables, geotechnical centrifuges, field equipment sites and a tsunami wave tank. The web-based telepresence features provided by the System Integration team for NEES facilitate integrated tests among multiple collaborators at multiple experimental NEES facilities.

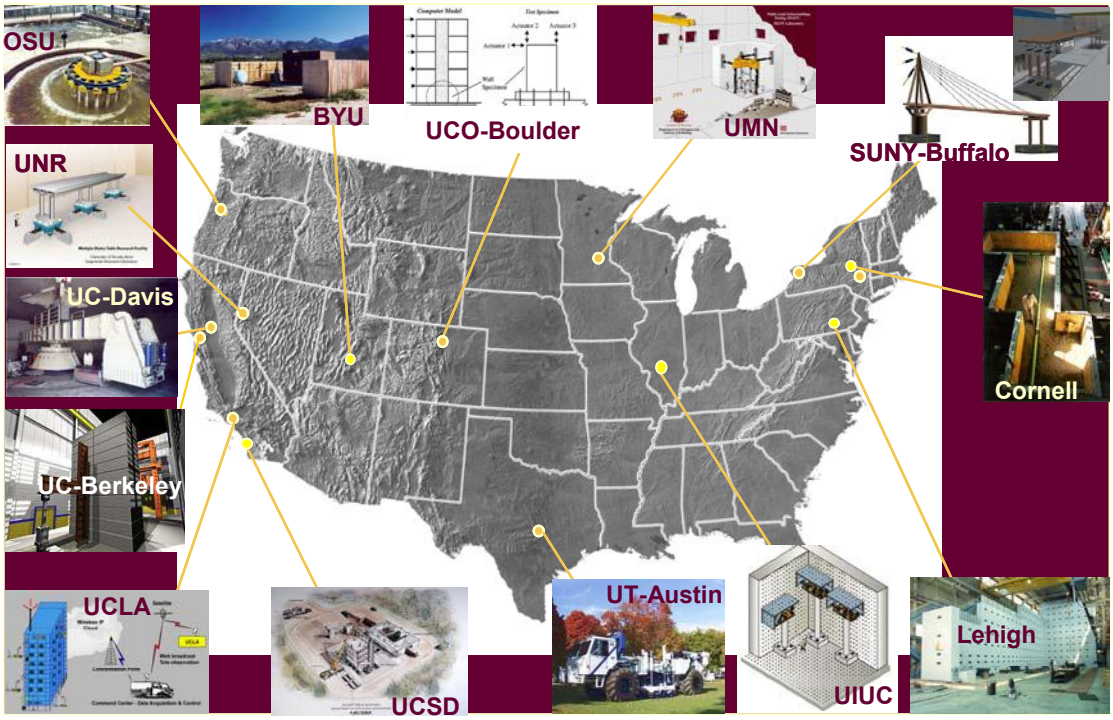

Figure 2 Geographical distribution of fifteen NEES equipment sites

This paper describes, in detail, one of the large-scale structural testing facilities, the Multi-Axial Subassemblage Testing (MAST) System at the University of Minnesota. The MAST system enables multi-axial cyclic static tests of large-scale structural subassemblages including portions of beam-column frame systems, walls, and bridge piers. The MAST system advances the current state of technology by allowing the experimental simulation of complex boundary effects through its multi-axial capabilities, which can impose multiple-degree-of-freedom states of deformation and load. The system is unique in size and scope and will greatly expand the large-scale earthquake experimentation capabilities both nationally and internationally.

MULTI-AXIAL SUBASSEMBLAGE TESTING (MAST) CONCEPT

The MAST equipment grant was funded in December of 2000 and is scheduled for on-time completion by September 30, 2004. The co-investigators for this project represent an interdisciplinary team, with Professors Catherine French, Jerome Hajjar, Carol Shield, Arturo Schultz and Robert Dexter from the Department of Civil Engineering, Professor Doug Ernie from the Department of Electrical and Computer Engineering (ECE), and Professor David Du from the Department of Computer Science and Engineering (CSE). Two of the unique features of the MAST system, which is shown in Figure 3, are (1) its large-scale capacity with the ability to test structures up to 6.1 x 6.1 m in plan and up to 8.6 m high (i.e., 20x20x28 ft) and (2) its ability to impose 6-degree-of-freedom (6-DOF) loading or deformation on the test structures.

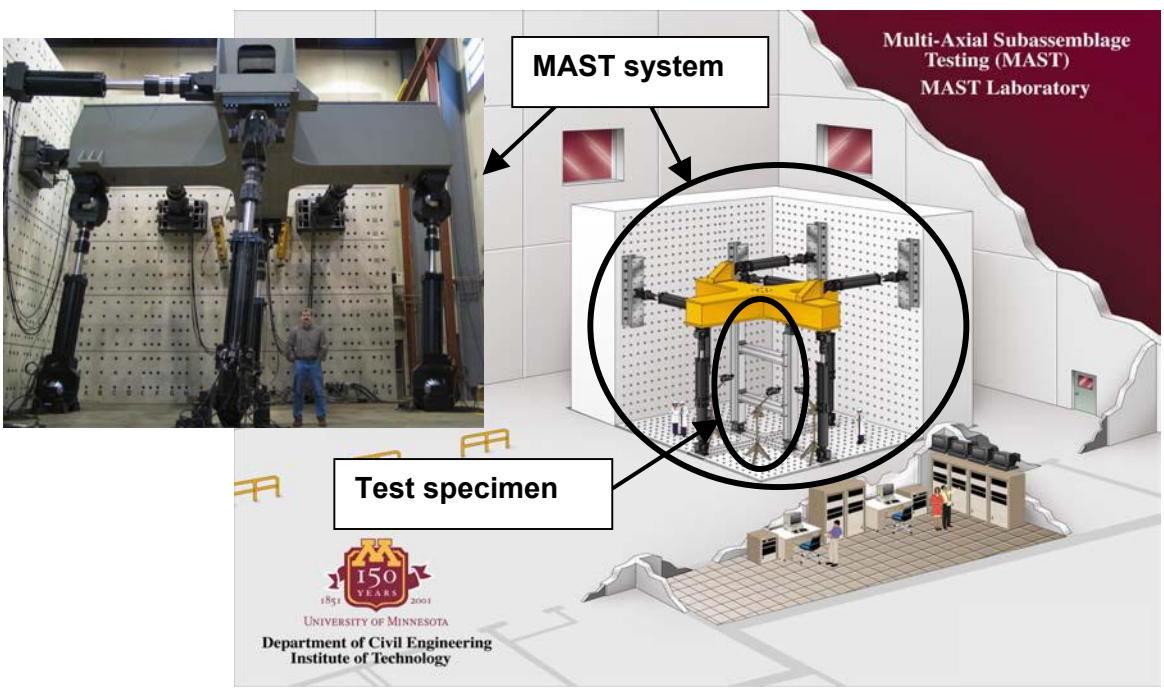

Figure 3 Multi-Axial Subassemblage Testing (MAST) System

The MAST System can be thought of as a large structural testing machine that is able to load structures attached between the stiff top crosshead (in the shape of a cruciform) and strong floor through movement of the machine's top crosshead. The sophisticated six-degree-of-freedom (6-DOF) servo-hydraulic control system is capable of controlling the crosshead as a plane in space, specifying the three translational

degrees of freedom and three rotational degrees of freedom of the center of the crosshead in either displacement or force control (or a mixture of the two).

Two sets of actuator pairs with strokes of ±400 mm (±16 in.) provide lateral loads up to ±3910 kN (±880 kips) in the orthogonal directions. These actuator pairs are secured to an L-shaped strong wall with universal swivels. Four ±1470 kN (±330 kip) vertical actuators, capable of applying a total force of ±5870 kN (±1320 kips) with strokes of ±510 mm (±20 in.), connect the crosshead and the strong floor. Hydrostatic bearings are used in conjunction with the vertical actuators to reduce friction loads. Vertical spacers can be mounted between the bearings and the vertical actuators for gross height clearance adjustment. The actuators are powered by a combination of four hydraulic service manifolds, attached to a 680 LPM (180 GPM) hydraulic power supply. Each actuator is configured with a 57 LPM (15 GPM) servovalve to support quasi-static testing.

The horizontal clear distance between the vertical actuators can accommodate specimens up to approximately 6.1 m (20 ft.) in length in the two primary orthogonal directions, longer test specimens may be accommodated by placement along the diagonal. The vertical clearance extends up to approximately 8.6 m (28 ft.), and can be varied by repositioning the lateral and longitudinal actuator attachments to the reaction wall.

The 6-DOF control enables application of complex load histories on subassemblages via control of the crosshead. The controller is configured to provide closed loop control of the 6-DOF system, and includes two servo compensation techniques, one for geometric cross coupling compensation, and the other for force balance compensation.

With the MAST system, any degree-of-freedom may be programmed in either displacement control or load control, and degrees-of-freedom may be constrained in a master-slave relation to be a linear combination of the values of other degrees-of-freedom. For example, using the mixed-mode control capabilities of the MAST, it is possible to program any lateral displacement history, and at the same time specify overturning moment as a constant times the lateral force, while simultaneously maintaining an independent history of axial load on the test specimen. Another advantage of the MAST system is that it enables control of a plane in space rather than just a point in space. This feature, for example, enables application of pure planar translations, as well as the possibility of applying gradients to simulate overturning (e.g., axial load gradient in the columns of a multi-bay frame, or wall rocking).

In addition, the system will be equipped with four ±980 kN (±220 kip) ancillary actuators with strokes of ±254 mm (±10 in.). Each of the ancillary actuators will have the option of independent master/slave control combinations, with the flexibility of slaving the actuators to scaled master control signals off of the 6-DOF controller. Using the ancillary actuators to apply simulated gravity loading to test structures is an example of a situation when one would employ independent control of the ancillary actuators. An example of slaving the ancillary actuators to scaled master signals off of the 6-DOF would be the case of using the ancillary actuators to apply lateral displacements (or loads) to intermediate stories of multi-story subassemblages tested in the MAST system. Another example of this control combination would be the case of employing the ancillary actuators to control the beam end boundary conditions at assumed inflection points. In this case, the ancillary actuators would be programmed to maintain constant elevation based on the translational DOF's of the MAST system.

The crosshead has a cruciform shape in plan, measuring 8.93 m (29.3 ft.) tip to tip, with a 1.42 x 1.65m (56 x 65 in.) box-shaped cross section, resulting in a span to depth (L/d) ratio of 2.2. It is fabricated with 38 mm (1.5 in.) thick plates, with the bottom plate being 50 mm (2 in.) thick. Design constraints included a weight limit not to exceed the 445 kN (100 kip) capacity of the crane such that the crosshead could be

lifted by the crane. The deformations of the crosshead were limited to approximately 3.8 mm (0.15 in.) under the range of possible loading conditions so as not to have a significant impact on the control parameters.

Under these constraints, the design of the crosshead was stiffness controlled, with the worst case loading associated with a stiff column directly attached to the bottom center region of the crosshead. Figure 4 shows one of the worst-case loading conditions, with the stiff element attached to the bottom center region of the crosshead and two adjacent actuators applying maximum force in the vertical upward direction, and two adjacent actuators applying maximum force in the vertical downward direction. Under these conditions, the maximum relative crosshead deformation is expected to be on the order of 3 mm (0.12 in.).

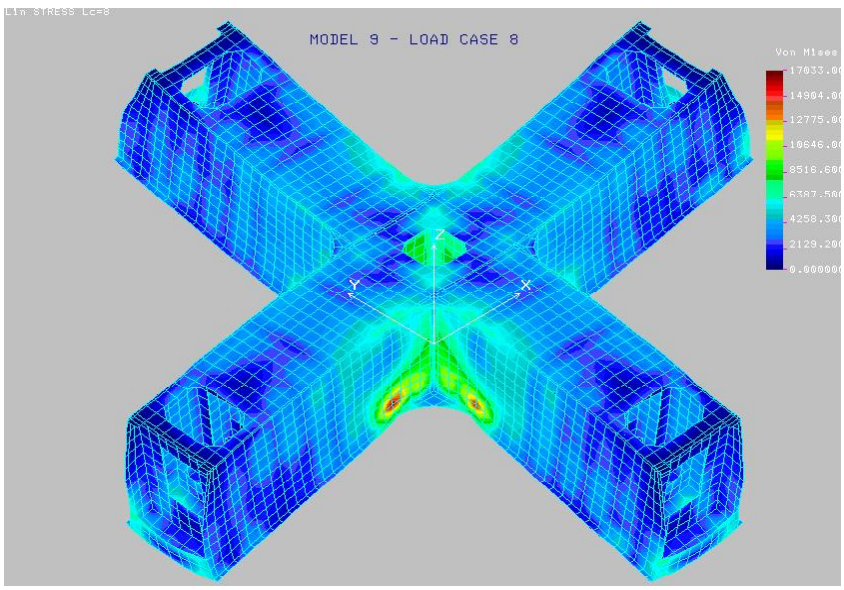

Figure 4 Finite element analysis of crosshead under one of the severe load cases

The strong floor is 10.7x10.7 m (35x35 ft.) in plan and consists of an array of 140 mm (5.5 in.) thick threaded steel plates post-tensioned to a 2.1 m (7 ft.) thick concrete slab. The threaded holes in the steel plate consist of a regular grid of anchor points at a center-to-center spacing of 460 mm (18 in.). More closely spaced holes are located directly below the centered placement of the top crosshead. The service load capacity of each threaded hole in the strong floor is 560 kN (125 kips) in the vertical (axial) direction and 560 kN (125 kips) in the horizontal (shear) direction. The reaction floor has sufficient strength to develop the forces required to load eight adjacent anchor points to capacity 4450 kN (1000 kips).

Each inside leg of the L-shaped reaction (strong) wall is 10.7 m (35 ft.) wide and 10.7 m (35 ft.) tall. The wall is post-tensioned to the foundation to increase its stiffness. A regular grid of anchor points is provided with a 460 mm (18 in.) center-to-center spacing. Each anchor point consists of a single 76mm (3 in.) through hole.

Each leg of the reaction wall can resist lateral forces of ±3910 kN (±880 kips) each at two elevations along the wall height, 4.9 m (16 ft.) and 9.8 m (32 ft.) above the top of the strong floor), for a total of ±7830 kN (±1,760 kips) (this configuration simulates that of a two story test structure, with the maximum lateral loads applied via the MAST top cross head and the four ancillary actuators). At each elevation, the ±3910 kN (±880 kip) force is applied as a pair of ±1960 kN (±440 kip) loads (Fig. 3), and these forces

can generate maximum horizontal shear force, bending moment and vertical torsion equal to 7830 kN (1760 kips), 59,100 kN-m (43,600 kip-ft), and 52,600 kN-m (38,800 kip-ft), respectively, about the base of each leg of the wall. The design constraints for the strong wall and strong floor included a maximum permissible lateral deflection for the strong wall of ±12 mm (±1/2 in.), and a maximum vertical deflection for the strong floor of ±3 mm (±0.12 in.).

Lateral deflection of the wall can be monitored relative to a reference frame during testing. If necessary, these deflection measurements can be incorporated in the control protocol for the MAST system to minimize deviations between actual and required absolute lateral deflection of test specimens.

EXAMPLE STRUCTURES WHICH COULD BE TESTED WITH THE MAST SYSTEM

The possibilities for structural testing with the MAST system are broad in scope. The following represent examples of types of structural configurations and variations on those concepts that could be tested with the MAST. The loading history, described below as "user-defined," represents a multitude of options, including using an input from a multi-directional pseudo-dynamic testing system. In the case of pseudo-dynamic testing, the tests described below might represent one component of a structural system that is tested simultaneously at a number of NEES sites.

Example 1 – Flanged Wall (Multidirectional Test)

Post-earthquake reconnaissance often identifies building corners formed by intersecting concrete or masonry walls as vulnerable to seismic damage, and biaxial loading effects are often cited as one of the reasons for this damage. However, little has been done to quantify the biaxial loading and wall resistance characteristics at these corners, nor to systematically verify details to mitigate this damage. The MAST system permits full biaxial testing of full-scale or near full-scale subassemblage tests of wall sections. The sample reinforced concrete core wall shown in Figure 5, typical of an elevator core, represents the lower two stories of a multi-story wall. To control the loading imposed on the wall through the boundaries, it is envisioned that rigid concrete blocks would be cast on the top and bottom of the wall to transfer the load from the cruciform-shaped crosshead to the flanged wall cross section. The 3/4 scale

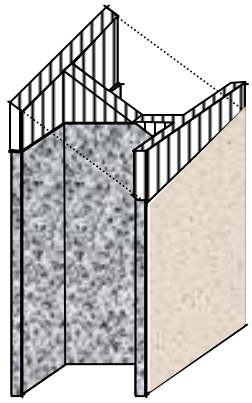

Figure 5 Flanged Wall with Biaxial Moment Gradient

demands listed in Table 1 were scaled from a 10-story prototype with 3.7 m (12 ft.) stories. Concrete strengths of 27.6 MPa (4000 psi) were assumed, along with a vertical reinforcement ratio of 2%, uniformly distributed throughout the cross section.

Assuming a moderate amount of inelastic behavior in the prototype structure, the centroid of the total lateral force distribution at maximum base shear is assumed at mid-height of the wall, resulting in a moment-to-shear (M/V) ratio of $H/2$, where H is the height of the wall. Testing of this system could proceed with a prescribed lateral drift applied along each horizontal direction to define the biaxial load pattern (e.g., either from a user-defined source or from pseudo-dynamic input). At the same time, mixed-mode control could be employed to impose the desired moment-to-shear ratio at the boundaries in the two orthogonal directions. The procedure might be as follows: A prescribed lateral drift is imposed simultaneously in the two orthogonal horizontal directions. The resulting moment vectors in the two orthogonal directions, caused by the actuators applying longitudinal and lateral loads, apply an overturning moment to the structure. The distribution of lateral, longitudinal, and vertical loads would be controlled via the 6-DOF controller to ensure that the desired M/V ratio is maintained. The two remaining world DOF's (e.g., a twisting moment about the vertical axis and the resultant vertical force or axial load) may be suppressed or controlled as well. As an example, the vertical force might be specified as either constant or cyclically varying, and either independent or synchronous with the longitudinal/lateral drift histories.

Example 2- Beam-to-Column Subassemblage (Multidirectional Test)

A typical beam-to-column subassemblage is shown in Figure 6. The test specimen represents a portion of a structure modeled between inflection points assumed to occur at midheight of the columns and midspan of the floors. To represent the boundary conditions, movement of the top of the column would be controlled by the MAST top crosshead. The bottom end of the column subassemblage could be attached to the strong floor with a universal joint (to simulate an inflection point), or a full-height lower story column could be attached to the strong floor with a boundary condition to simulate the first story column base connection. The four ancillary actuators would maintain the story elevation of the beam ends as the column is subjected to a user-defined displacement history. The MAST 6-DOF controller enables complex biaxial displacement histories, while through mixed-mode control, the axial load on the column can be controlled as well. Table 1 shows the required load and displacement demands to test a biaxially loaded subassemblage that would be similar in concept to one of the beam-to-column connections in the NSF Precast Seismic Simulation Systems (PRESSS) Phase 2A project, in which case the lateral load resistance was assumed to be provided by perimeter frames. The demands listed in Table 1 are

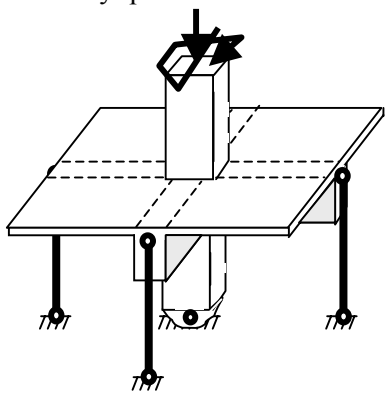

Figure 6 Beam-to-Column Subassemblage

envisioned to be near the anticipated maximum limit for a large-scale biaxial subassemblage test. The lateral/longitudinal loads and ancillary actuator loads are based on the assumption that a beam-hinging mechanism develops. Maximum displacements are associated with extreme drifts (up to 8%). The axial load represents the gravity load on a lower story subassemblage in a 15-story building.

Example 3 – Multi-Story, Multi-Bay Frame (Unidirectional Test)

The third example is a two-bay, two-story steel structure shown in the schematic view of the MAST system in Figure 3, and in more detail in Figure 7. The bottom of the columns would be fixed to the strong floor. The top of the test structure, representing inflection points at midheight of the column story, would be attached to the top of the MAST crosshead with pinned connections. The columns could be loaded initially to simulate gravity loading in the lower stories of the structure. As the structure is displaced under cyclic lateral loads, a proportional amount of overturning moment could be applied via the 6-DOF control. The out-of-plane degrees-of-freedom would be constrained against displacement and twist at the top of the columns. Ancillary actuators (shown as arrows in Figure 7) may be used to apply supplemental lateral loads (or displacements) at the individual story levels. The loads (or displacements) applied by the ancillary actuators may be scaled from the MAST crosshead. Another use of the ancillary actuators could be in the application of gravity loads to the test structure floor system.

With the 6.1 m (20 ft.) clear distance between the vertical actuators of the MAST system, the multi-bay structure as shown is limited to ½ scale [1:1 scale would correlate with W14x311 (50) columns and W33x150 (50) girders for a steel structure]. Typical loading requirements are highlighted in Table 1. These concepts could be expanded to include multidirectional testing capabilities.

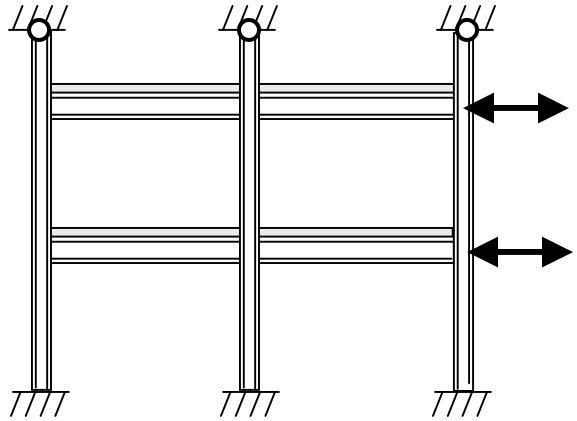

Figure 7 Multi-Story, Multi-Bay Frame Subassemblage

Table 1. Anticipated Specimen Load and Stroke Demands

Specimen Type	**Dimensions**		**Longitudinal**		**Lateral**		**Axial**	**Ancillary**	
	Column	**Beam**	**Load (kN)**	**Stroke (mm)**	**Load (kN)**	**Stroke (mm)**	**Load (kN)**	**Load (kN)**	**Stroke (mm)**
MAST Capacity	6.1x6.1 m in plan, vertical 8.6 m (var.)		±3,910	±400	±3,910	±400	5,870	±980	±250
EX. #1 Scale 3:4	4.6x4.6 m in plan, 230 mm thick[1]		±2,890 ‖ to web	-	±670 ⊥ to web	-	4,000	Optional	
EX. #2 scale 1:1	1x1.1 m	0.5x1 m	±1,510	±330	±1,510	±330	5,340	±980	±200
EX. #3 Scale 1:2	W8x67 F_y=345 Mpa	W16x31 F_y=345 MPa	±670	±380	Optional		4,500	Optional	

[1] Flanged wall dimensions are 4.6x4.6 m in plan, 230 mm thick, with longitudinal loading parallel to the web, and lateral loading normal to the web.

The MAST system is not limited to particular types of building materials. The example specimens described above might feature reinforced concrete, precast concrete, steel, and masonry, or combinations of these materials. There may also be new building materials or structural configurations, not yet envisioned, that could be tested within the MAST facility, as well as energy dissipation and load control devices.

SHARED-USE TELEPRESENCE AND MODEL-BASED SIMULATION IN MAST FACILITY

In conjunction with the contributions of the NEES System Integrator (SI) at the University of Illinois at Urbana/Champaign, the telepresence infrastructure will provide all relevant information needed for both monitoring and interpretation of the experiments. As such, this facility will incorporate real-time telepresence of all visual monitoring information during an experiment and real-time transmittal of acquired sensor data (note that real-time implementation may for some components be near-real-time, with a typical latency constraint of 2-3 seconds imposed by processing, serving, and networking infrastructure). A summary of the equipment envisioned as part of the real-time telepresence capabilities in the MAST facility is shown in Figure 8.

Teleobservation is being achieved through a set of eight remotely-controllable digital audio/video cameras and eight remotely-controllable high-resolution digital still cameras spaced uniformly around the perimeter of the three-dimensional specimen, and through an array of sensors (e.g., strain gauges, position sensors). Two lab-sweep cameras are also posted in the laboratory to permit viewing of the laboratory space as a whole, including one camera being controllable remotely by public clients (e.g., a classroom of children). All cameras are on remotely-controllable robotic towers that extend the range of vertical coverage of the cameras. Limited real-time teleoperation of hydraulic equipment has also been developed, in which juried control is enabled such that an on-site staff member participates in the execution of all experiments to ensure safety and accuracy in execution of a remotely-operated experiment. Teleobservation and teleoperation of the video and still cameras is achieved through a set of high-end PC systems configured as Video Acquisition and Still Image Acquisition Servers. Teleobservation of sensor data is achieved through a single high-end PC system configured as the Data Acquisition Server. The information gathered during an experiment (including sensor data, streaming video/audio, and still images) is collected and streamed to a remote Client Machine for real-time teleobservation and teleoperation. An intelligent web browser on the Client Machine serves as the primary graphical user interface for all real-time teleobservation and teleoperation functions of the MAST Facility. Video-teleconferencing (VTC) equipment that may link several sites simultaneously serves as the major mechanism for communication with a remote client during an experiment.

The MAST facility also fits into an integrated data-centric approach for experimentation, computation, theory, databases, and model-based simulation facilitated through the NEES System Integration. One of the most powerful features of this integrated approach to model-based simulation is an accumulated database of experimental results, which features the ability to "replay" tests and to couple experimental responses with computer simulations. To facilitate this integrated approach, a complete archive of all data (e.g., video, audio, still images, sensor responses, actuator settings, materials properties and measurement methods, structural dimensions) is stored on a Visualization and Archiving Server for subsequent on-site and remote access. The Visualization and Archiving Server operates using the same graphical user

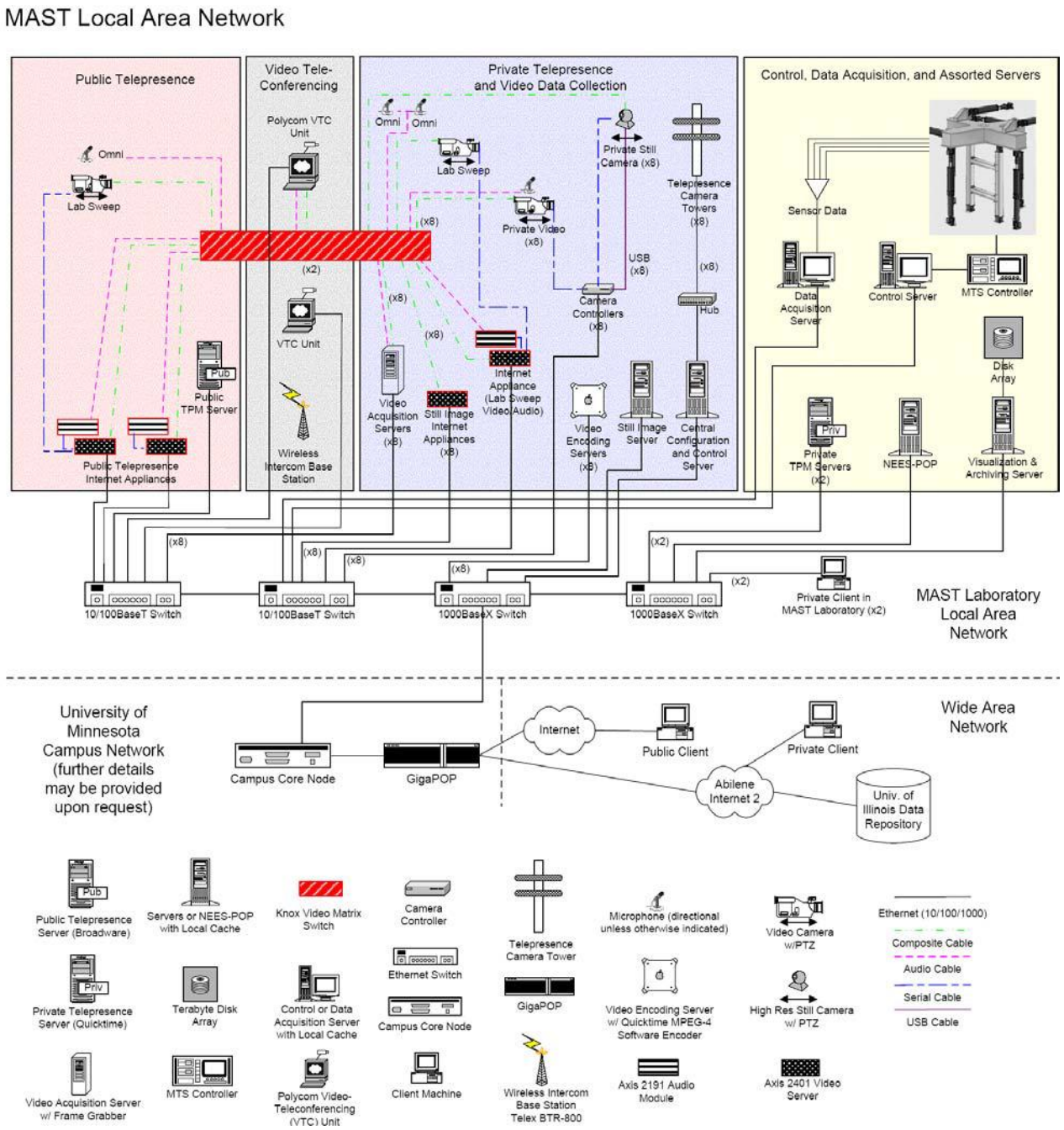

Figure 8 Schematic of MAST Laboratory Local Area Network

interface intelligent web browser on the Client Machine for visualization, and uses software identified by the NEES System Integrator for archiving. The Visualization and Archiving Server, along with the intelligent web browser, includes video and audio streaming capability, remote accessibility to all playback functions, and multimedia synchronization capability.

CONCLUSION

As part of the George E. Brown, Jr. Network for Earthquake Engineering Simulation (NEES) program, sponsored by the National Science Foundation, and coupled with the establishment of the national NEES Consortium, Inc., in 2004, the Multi-Axial Subassemblage Testing (MAST) System at the University of Minnesota will be a national facility available for shared-use by researchers interested in testing large-scale structural subassemblages subjected to multi-directional loading. The MAST facility fits into an integrated data-centric approach for experimentation, computation, theory, databases, and model-based simulation facilitated through the NEES System Integration.

ACKNOWLEDGMENTS

Funding for this research was provided by the National Science Foundation under Grant No. CMS-0086602 as part of the George E. Brown, Jr. Network for Earthquake Engineering Simulation, and by the University of Minnesota. Any opinions, findings, and conclusions or recommendations expressed in this material are those of the authors and do not necessarily reflect the views of the National Science Foundation.