13th World Conference on Earthquake Engineering
Vancouver, B.C., Canada
August 1-6, 2004
Paper No. 1996

SEISMIC RESPONSE OF STEEL FRAMES WITH ENERGY DISSIPATERS FRICTION-TYPE: AN ANALYTICAL STUDY

A. REYES-SALAZAR[1], J. D. GARAY-MORÁN[2], J.I. VELÁZQUEZ-DIMAS[1]
J.H. GONZÁLEZ-CUEVAS[1] and L.F. SAINZ-LÓPEZ[1]

SUMMARY

The nonlinear seismic responses of moment resisting steel frames with energy dissipater devices (EDD) friction-type are studied. The dissipaters are placed in the beam-column joint providing maximum flexibility for space utilization. Several moment resisting steel frames (MRSF), representative of the short, medium and long period regions, and several strong motions, representative of medium and stiff local soil conditions, are used in the parametric study. In addition, the parameters of the device are modified to vary the magnitude of the friction force. The authors and their associates developed a finite element-based algorithm to evaluate the nonlinear seismic response of steel frames in time domain. The algorithm is able to model the behavior of EDD and is used in the study. The numerical study indicates that EDD based on friction of metals can significantly reduce the seismic response of steel frames. It is observed that the magnitude reduction, in terms of interstory displacement, decrease with the fundamental period of the frames, but the reduction for interstory shear is similar for all the frames. No correlation is observed between the reduction of either displacements or shears with the predominant period of the earthquakes. Many plastic hinges are formed in the frame without energy dissipaters, but no plastic hinges are formed, in general, in the frames with dissipaters. It indicates that using energy dissipaters friction-type protect the frames from significantly yielding. In order to quantify the effectiveness of the dissipater, the required equivalent viscous damping to produce the same level of reduction of the base shear as that of the dissipater, is estimated. It is clearly shown that the equivalent viscous damping of the energy dissipaters friction-type can be much larger than that existing in a bare steel frame ($\xi \approx 2\%$). Based on this finding, design response spectra for MRSF with energy dissipaters friction-type can be developed for specific sites by using appropriate amounts of equivalent viscous damping.

INTRODUCTION

It is known that, among the different structural configurations used for steel frames in regions of high seismicity, moment resisting steel frames (MRSF) have been the most popular. Architects and owners prefer to use this system because of lack of bracing, which provides maximum flexibility for space utilization. Even though, the member sizes of MRSF are normally increased to meet the building code's drift requirements, it is

1→Professor, Facultad de Ingeniería, Universidad Autónoma de Sinaloa, reyes@uas.uasnet.mx
2→Graduate student, Facultad de Ingeniería, Universidad Autónoma de Sinaloa

customarily considered a good exchange for bracing elements. In addition, MRSF are popular because they are considered as highly ductile systems. Code-specified seismic procedures typically assign the largest force reduction factor (*R*) to MRSF, implying the largest ductility and the lowest lateral design forces. However, recent earthquakes in the United States (Northridge 1994) and Japan (Kobe 1995) have demonstrated that the seismic behavior of MRSF was not as expected. Several frames, many of them recently constructed, suffered failure in their connections.

It is generally accepted that the seismic behavior of buildings strongly depends on their energy dissipation capacity. In a MRSF frame the major sources of energy dissipation are due to viscous damping (E_D) and the hysteretic behavior of the material (E_P) at the location of plastic hinges. Plastic energy however, is accompanied by significant nonlinear response, which constitutes substantial damage to the seismic framing system. If one part of the input energy is dissipated through special devices, which can be easily replaced after the occurrence of a severe earthquake, the structural damage caused by yielding of the material could be reduced. The use of energy dissipating devices is a promising approach to the problem.

Several energy dissipating devices have been developed and tested around the world. It has been shown that these devices increase the energy dissipation capacity of buildings without significantly changing their natural periods. They can be used in new structures or in existing ones, which don't have enough resistance to seismic loading. Devices within a structure used to dissipate energy introduced by an earthquake are referred as Passive Energy Dissipaters. According to their behavior, Passive Energy Dissipaters are classified [1] as hysteretic and velocity-dependent. Hysteretic dampers in turn include those based on friction and yielding of metals. Examples of velocity-dependant dampers include those consisting of viscoelastic solid materials or fluids and those operating by forcing fluids through an orifice. It has been shown [2] that the maximum base shear and displacements of a structure can be significantly reduced when passive dampers of the second group are used. However, it is also recognized that the construction of some of these devices is not economical and consequently their use is not generalized yet.

Energy dissipaters based on friction of metals have been tested by researchers [3, 4]. They represent a good alternative for several reasons: a) it has been shown that the hysteretic cycles of these devices are nearly elasto-plastic, b) they don't present stiffness degradation during several dozen of cycles [5, 6], c) they are easy to construct, and d) the magnitude of their yielding force can be economically modified by varying the thickness of the component plates and the normal force.

One of the energy dissipaters based on friction of metal broadly tested is that proposed by Pall [5]. The system basically consists of an inexpensive mechanisms containing friction brake lining pads placed at the intersection of the frame cross-braces. The performance of this model was analytically and experimentally tested by Filiatrault and Cherry [7] by using a 1/3 scale three-story one-bay frame. The results clearly showed the superior performance of the frame with energy dissipaters compared to conventional building systems. The Pall Model was also experimentally studied by Kullman and Cherry [8] by using a full scale one-story one-bay frame. The results of the test indicated that the friction damper provides a nearly rectangular and repeatable hysteresis curve. Kullman and Cherry also performed an analytical study by using a six-story frame with and without dissipaters. Comparisons between the response of the friction damped frame and the conventional braced frame indicate that, for the frame model under consideration, the response in terms of moments and interstory displacements was not necessarily improved in all stories when energy dissipaters were used. However, the friction dampers protect all the main structural elements from yielding.

Another energy dissipater based on friction of metals was proposed by Grigorian et al [6]. This device consists of slotted bolted connections, which are designed to dissipate energy through friction during rectilinear tension and compression loading cycles. The development of this device requires only slight modification of standard construction practice and requires materials, which are widely available commercially. The performance of this

dissipater was analytical and experimentally tested by Grigorian by using a one-story one-bay diagonally braced frame under the action of several earthquakes. The results of the study indicated that, on the average, close to 85% of the total input energy is dissipated by the dissipater. However, as the dissipater proposed by Pall, braced elements are required to place the device.

Recently, Zhao and Ha [9] proposed an energy dissipater friction-type. This device is similar to that proposed by Grigorian. However, the dissipater is located at the beam-column connection. The device basically consists of two slotted T-stub which connect beam and columns as shown in Fig. 1. High strength bolts are inserted in the slotted holes. The T-stub may be replaced with angles or welded plates. The friction connection also includes an outer plate and brake lining pads placed as shown in Fig. 1. The bolts press the two brake lining pads against the faces of the T-stub. As the T-stubs move within the slotted holes, frictional forces develop producing energy dissipation. The friction joints are designed not to slip under service load, but are expected to slip under a severe earthquake. One of the advantages of this energy dissipation device is that no braced elements are required to place the dissipater. The performance of this dissipater was analytically tested by Zhao and Ha by using two steel frames having 8 and 20 stories under the action of four strong motions. The numerically study indicates that the interstory displacements and base shear can be significantly reduced when the above-mentioned connection is used.

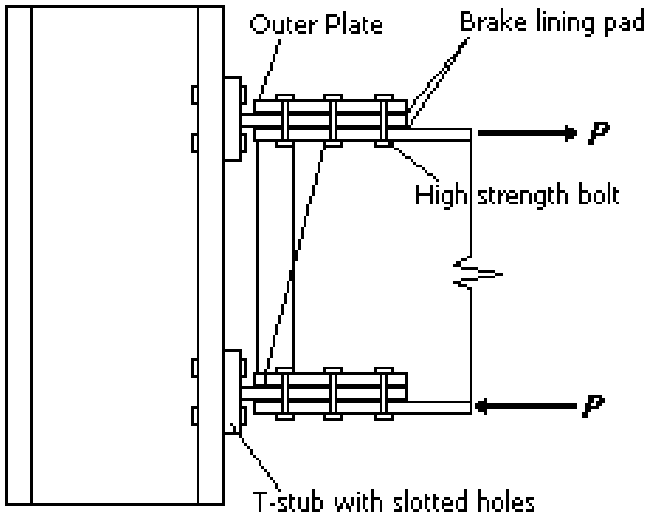

Fig. 1. Zhao and Ha´s Model

In this paper, the nonlinear seismic response of moment resisting steel frames with energy dissipaters friction-type, as those used by Zhao and Ha, is studied. The dissipaters are placed in the beam joints. Several MRSF, representative of the short, medium and long period ranges, and several strong motions, representative of medium and stiff local soil conditions, are used in the study. In addition, the parameters of the dissipater are modified to vary the magnitude of the force friction. Their efficiency in terms of viscous damping is evaluated. The authors and their associates to evaluate the nonlinear seismic response of steel frames developed a finite element-based algorithm in the time domain. The algorithm is able to model energy dissipaters and is used in the study. This is elaborated further below.

MATHEMATICAL FORMULATION

As stated earlier, an efficient finite element-based time-domain nonlinear analysis algorithm already developed for the authors and their associates [10, 11] is used to estimate the response of frames with and without energy dissipaters. The procedure estimates nonlinear seismic responses of steel frames considering all major sources of energy dissipation. Material and geometric nonlinearity and that nonlinearity introduced by the dissipaters are considered. Considering its efficiency, particularly for steel frame structures, the assumed stress-based finite element method [12] is used. According to this approach, an explicit form of the tangent stiffness matrix is derived without any numerical integration. Fewer elements can be used in describing a large deformation configuration without sacrificing any accuracy. Furthermore, information on material nonlinearity and on the dissipater can be incorporated in the algorithm without losing its basic simplicity. It gives very accurate results and is very efficient compared to the displacement-based approach.

Based on an extensive literature review, it is observed that viscous damping Rayleigh-type is commonly used in the profession and is used in this study too. The consideration of both, the tangent stiffness and the mass matrices, is a rational approach to estimate the energy dissipated by viscous damping in a nonlinear seismic analysis. The mass matrix is assumed to be concentrated-type and the step-by-step numerical integration procedure with the Newmark β method is used to solve the nonlinear governing equations of the problem. The friction connection is represented by a partially retrained connection, which in turn is modeled by using the Richard's Model [13].

A computer program has been developed to implement the procedure. The program was extensively verified using information available in the literature. The structural response behavior in terms of members' forces (axial load, shear forces and bending moments), total base shear and interstory displacements, can be estimated using the computer program.

THE RICHARD'S MODEL

Connections are structural elements that transmit axial and shear forces, torsion and bending moments between beams and columns. Almost all steel connections used in frames are essentially partially restrained (PR) connections with different rigidities. For plane structures, the case addressed in this paper, the torsion effect on connection deformation can be neglected. Furthermore, it has been shown that the effect of shear and axial forces is small in comparison with that of bending moment and can also be neglected [14]. Thus, the bending moment at the connections and the corresponding relative rotation, generally referred as moment-relative rotation (M-θ) curves, are used to represent the flexible behavior of PR connections.

Many alternatives are available in the literature to define M-θ curves to represent the PR connection behavior, i.e., piecewise linear, polynomial, exponential, B-spline, and the Richard model. The Richard four-parameter model is applicable to a wide variety of connections. It was developed using experimental data. According to the model the tangent stiffness $K(\theta)$ of the M-θ curve can be shown to be:

$$K(\theta) = \frac{dM}{d\theta} = \frac{(k - k_p)\theta}{\left[1 + \left|\frac{(k - k_p)\theta}{M_0}\right|^N\right]^{(N+1)/N}} \qquad \textbf{(1)}$$

where k is the initial or elastic stiffness, k_p is the plastic stiffness, M_0 is the reference moment, and N is the curve shape parameter. The physical definition of these parameters is shown in Fig. 2.

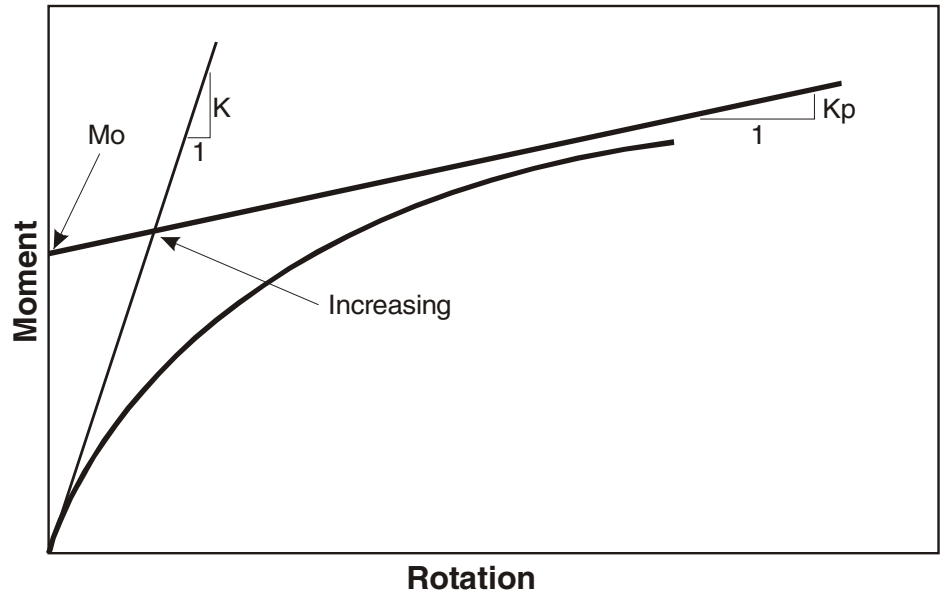

Fig. 2. Parameters of the Richard´s Model

In this study, the dissipater is represented by a PR connection, which in turn is modeled by the Richard´s Model. The friction forces developed at the upper and bottom brake lining pads times the depth of the beam will give the magnitude of the connection moment. The Richard Parameters are selected in such a way that force-displacement curves are approximated to those obtained from experimental results (small values of k_p, and large values of k and N). The parameters of the dissipaters, and consequently their corresponding M-θ curves, change as the sizes of the beams change. For example, for Frame 3, there are four different sizes of beams, as shown in Fig. 3. Therefore, there will be four different dissipaters (and four M-θ *curves*) for this frame.

STRUCTURAL AND EARTHQUAKES MODELS

Three steel moment resisting frame structures, representing different dynamic characteristics, are considered in the study. The frames are one, three, and eight stories. Their story height is a constant of 3.66 m and the span of each bay is 7.32 m. These frames were used for other researchers in analytical and experimental studies [15]. Initially, the frames were designed according to UBC standards. Then, they were modified to generate three strong-column weak-beams (SCWB) models. Their geometry and member sizes are shown in Fig. 3. These frames are denoted hereafter as Frames 1 through 3. Their fundamental periods are 0.22, 0.49 and 1.07 sec., respectively. A critical damping of 2% (ξ=2%) is assumed in the frames. With the exception of exterior joints and the joints located on the top floor, the ratio of the sum of the plastic moments of the beams framing into a given beam-column joint to the sum of the plastic moments of the columns framing into the same joint, ranges from 0.76 to 0.96. All beams are made of A36 steel and the columns of Grade-50 steel, for all the models. These frames with different dynamic characteristics are subjected to twenty strong motion earthquakes representative of medium and stiff local soil conditions. They are referred hereafter as Earthquakes 1 through 20. The predominant periods of the earthquakes are given in Table 1. The used earthquakes are scaled down or up in such a way that the frames develop approximately a maximum interstory displacement of 2%.

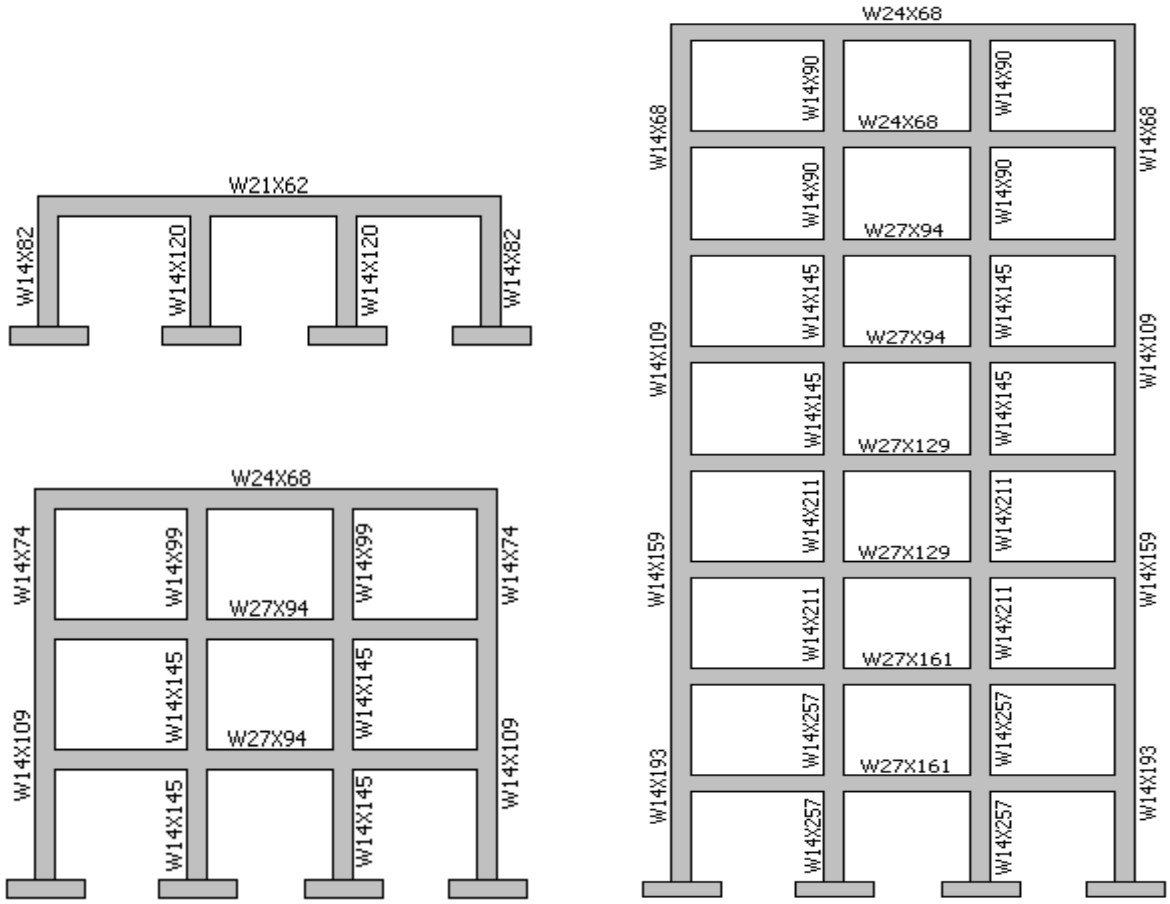

Fig. 3. Structural Models

RESULTS

Results in terms of interstory displacements

The interstory displacements for Frame 1 are given in Table 2 for all the earthquakes. Four levels of the maximum friction force at the connection are considered: to develop maximum moments at the ends of the beams of *60%, 70%, 80%, and 90%* of the plastic moment (M_p). Thus the values of the ratio of the maximum moment than can be developed to the plastic moment, denoted as R, are *0.6*, *0.7, 0.8 and 0.9*, respectively. $R=1.0$ will represent the frame without energy dissipaters (M_p is developed at the beams without sliding at the connection). Results in the table indicate that the maximum interstory displacements can be significantly reduced when energy dissipaters are used. The reduction tends to increase as the R parameter decreases. Even though the stiffness of the frame with energy dissipaters is lower than that of the frame without dissipaters, the response under seismic loading largely depends on the dynamic characteristics of both the structure and the earthquake excitation. The frames with dissipaters may attract smaller inertial forces and at the same time dissipate more energy. For a given value of the R parameter, no correlation is observed between the magnitude of the reduction and the predominant period of the earthquakes.

Table 1. Earthquake models

EARTHQUAKE NUMBER	EARTHQUAKE NAME	STATION	PREDOMINANT PERIOD (SEC)
1	SAN FERNANDO	LAKE HUGHES ARRAY #12	0.17
2	SAN FERNANDO	PACOIMA DAM	0.21
3	NORTHRIDGE	LOS ANGELES WADSWORTH BLVD.	0.22
4	NORTHRIDGE	TOPANGA FIRE STATION	0.30
5	NORTHRIDGE	TOPANGA FIRE STATION	0.32
6	SAN FERNANDO	CASTAIC-OLD RIDGE ROUTE	0.34
7	SAN FERNANDO	CIT MILLIKAN LIB	0.35
8	NORTHRIDGE	LOS ANGELES, 1526 EDGEMONT AVE	0.39
9	SAN FERNANDO	450 N ROXBURY, BEVERLY HILLS	0.40
10	NORTHRIDGE	LOS ANGELES, WADSWORTH VA	0.48
11	NORTHRIDGE	LOS ANGELES, GRIFFITH OBSERVATORY	0.50
12	NORTHRIDGE	LOS ANGELES, 10660 WHILSIRE BLVD.	0.51
13	SAN FERNANDO	GRIFFITH PARK OBS	0.52
14	NORTHRIDGE	CANOGA PARK, SANTA SUSANA	0.57
15	NORTHRIDGE	HAWTHORNE FAA BLDG	0.60
16	EL CENTRO	ELC0	0.68
17	NORTHRIDGE	LOS ANGELES, 4929 WHILSIRE BLVD.	0.70
18	NORTHRIDGE	SHERMAN OAKS, 1525 VENTURA BLVD.	0.84
19	NORTHRIDGE	JENSON FILTRATION PLANT	1.15
20	NORTHRIDGE	LOS ANGELES, 4929 WHILSIRE BLVD.	1.21

Table 2. Interstory displacements and shears

EARTHQUAKE NUMBER	INTERSTORY DISPLACEMENT (cm)					INTERSTORY SHEAR (kN)				
	R=0.6	R=0.7	R=0.8	R=0.9	R=1.0	R=0.6	R=0.7	R=0.8	R=0.9	R=1.0
1	2.00	2.60	2.66	2.68	2.81	238	358	371	375	395
2	2.45	2.90	3.11	3.13	2.88	277	377	412	422	404
3	2.34	2.40	2.43	2.43	3.04	251	324	338	339	421
4	2.33	2.94	3.27	3.59	5.01	251	358	396	422	538
5	2.31	2.50	3.05	3.22	2.86	248	343	385	416	401
6	2.73	3.12	2.69	2.63	3.81	285	356	361	365	498
7	2.97	3.37	3.47	3.40	3.77	279	372	407	432	479
8	3.23	2.88	2.96	2.96	3.34	265	352	378	401	439
9	1.84	2.55	2.78	2.85	2.81	229	328	368	393	394
10	3.21	3.36	3.12	3.22	4.25	330	389	420	428	537
11	2.70	2.72	2.91	3.24	3.06	266	349	385	417	422
12	2.82	3.21	3.09	3.15	3.93	301	375	387	416	448
13	3.10	2.83	2.99	3.08	3.53	307	360	399	418	454
14	4.77	4.52	4.75	4.76	3.82	377	447	473	476	480
15	3.05	3.15	3.09	3.20	3.26	275	365	404	418	498
16	3.00	2.99	2.88	2.95	3.11	296	359	387	408	436
17	3.85	3.61	3.53	3.51	3.95	337	398	430	438	509
18	3.67	3.58	3.35	3.36	3.44	313	378	412	425	488
19	2.06	1.87	1.86	1.86	2.88	233	260	260	260	254
20	6.10	5.42	4.16	4.01	4.27	417	440	460	460	496

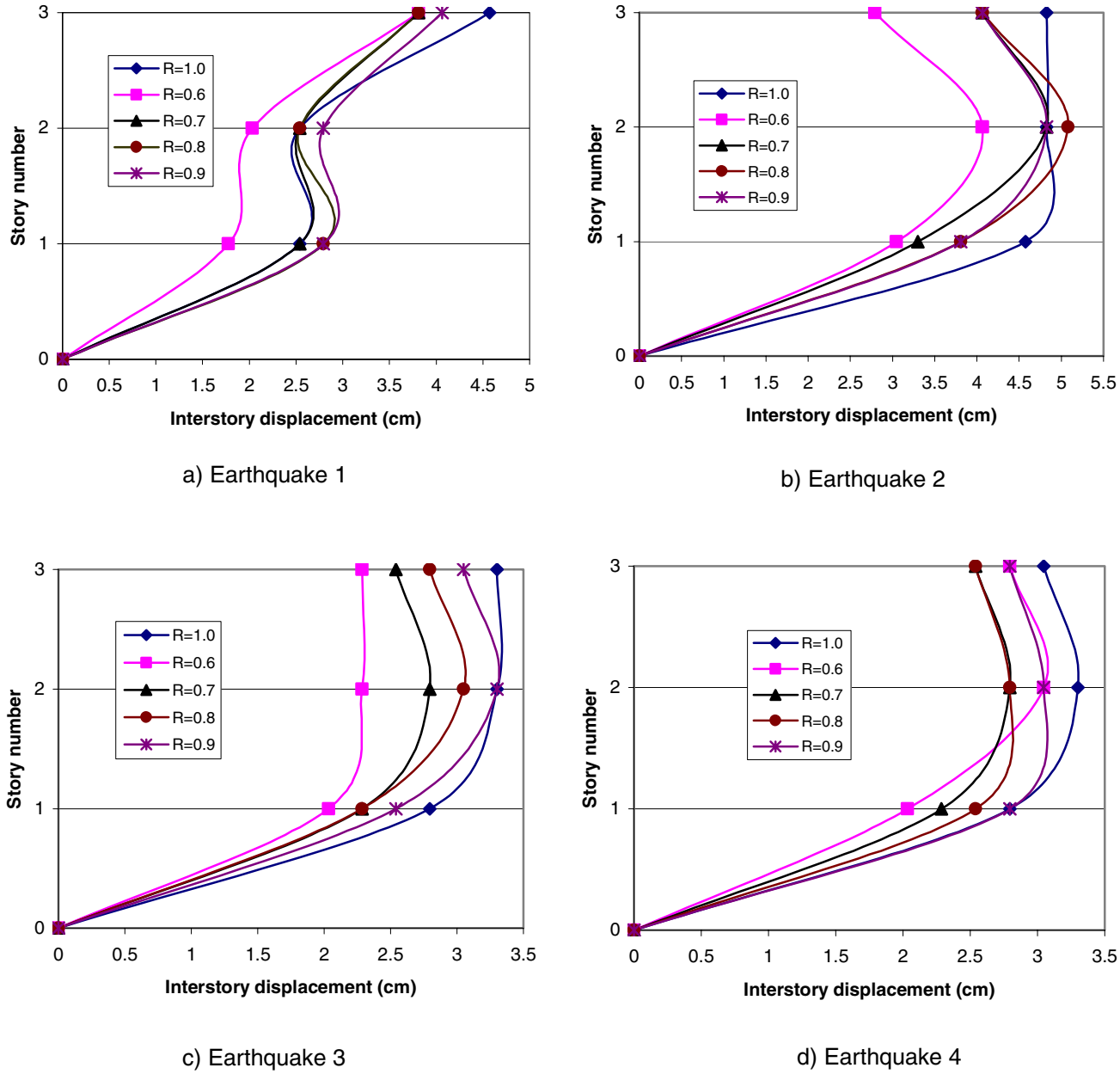

Fig. 4. Interstory displacements for Frame 2

Representative results for Frame 2 are shown in Fig. 4. Only Earthquakes 1 through 4 are considered. As for the case of Frame 1, in general, the interstory displacements tend to decrease when energy dissipaters are used. However, unlike Frame 1, no monotonic reduction of the displacements is observed as the *R* parameter decreases. In addition, the displacements of the frame with energy dissipaters are larger than that of the frame without dissipaters for some particular earthquakes and stories. It is also observed that, for a given value of *R*, the magnitude of the reduction significantly vary from one earthquake to another

without shown any correlation, and that, for a given earthquake, no correlation is observed between the magnitude of the reduction and the high of the frame. Interstory displacements for Frame 3 are similarly estimated but are not shown. The results are similar to those of Frames 1 and 2. By a comparison of the results for the three frames it is concluded that the magnitude of the displacement reduction tends to decrease with the fundamental period of the frames. It is important to emphasize that, while many plastic hinges are formed in the frame without energy dissipaters, no plastic hinges are formed, in general, in the frames with dissipaters. Only one o two plastic hinges are formed in the frames with $R = 0.9$ for a few cases. It indicates that using energy dissipaters friction-type protect the frames from significantly yielding.

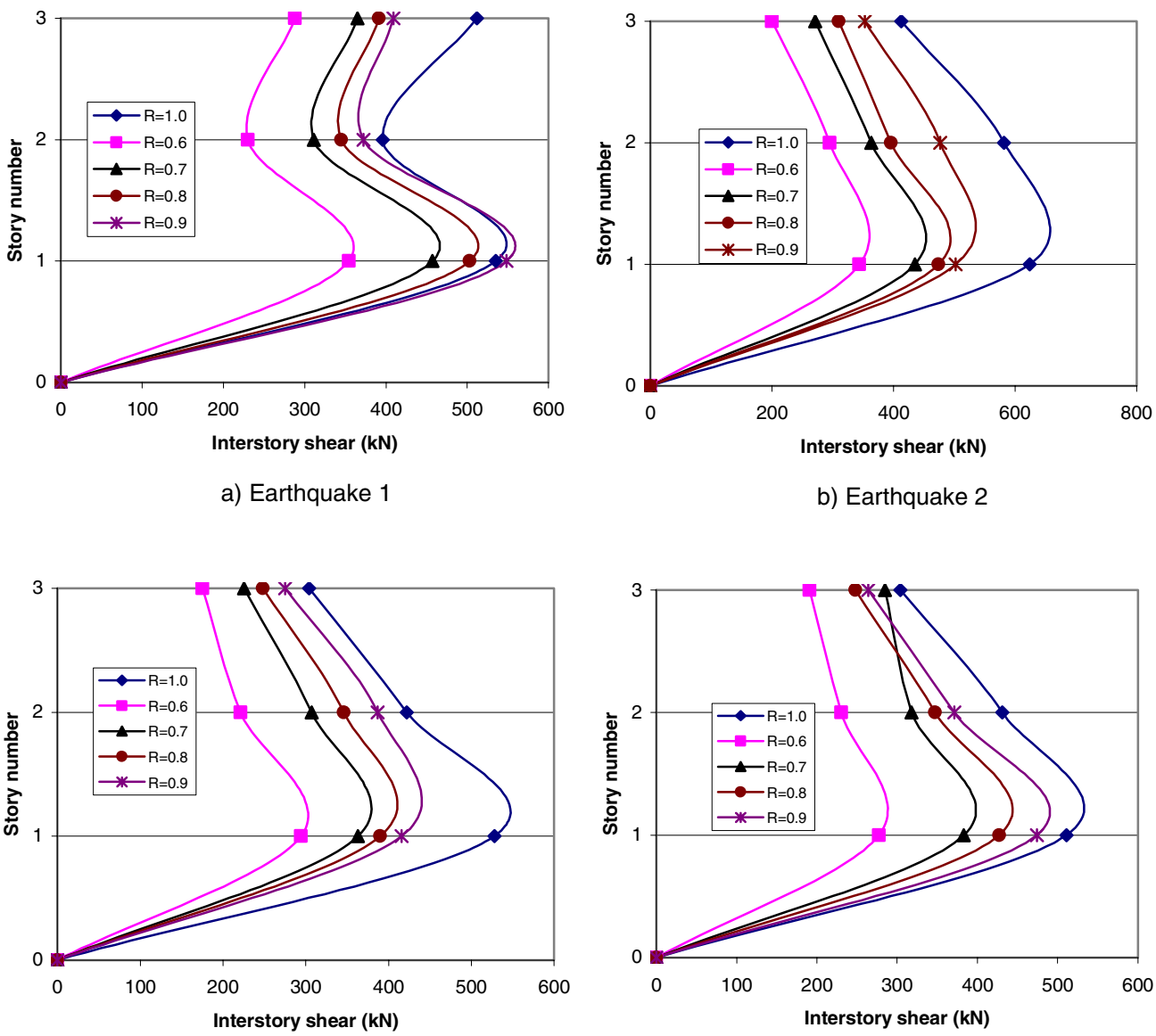

a) Earthquake 1

b) Earthquake 2

c) Earthquake 3

d) Earthquake 4

Fig. 5. Interstory shear for Frame 2

Results in terms of interstory shears

The interstory shears for all the frames and the four levels of the friction force are also estimated. Results for Frame 1 are given in Table 2 and typical results for Frame 2 in Fig. 5. Some of the major observation made for the case of interstory displacements also apply to this parameter: a) the interstoy shears can be reduced by using energy dissipaters, b) for a given value of *R* and frame no correlation is observed between the magnitude of the reduction and the predominant period of the earthquakes, and c) for a given earthquake and frame no correlation is observed between the reduction and the height of the frame. The only additional observation that can be made is that the reduction is more for interstory shears than for interstory displacements. It is also observed that the reduction for interstory shears does not decrease with the fundamental period of the frames, as it does for the case of interstory displacements.

Effectiveness of the dissipater in terms of equivalent viscous damping.

It has been shown that the use of energy dissipaters type friction can significantly reduce the maximum response of steel frames. In order to quantify the effectiveness of the dissipater, the reduction in terms of the total base shear is additionally studied. The required amount of viscous damping (ξ_a) in the frame without energy dissipaters to produce approximately the same reduction as that of the dissipater is estimated. The values of ξ_a for all the frames, *R* ratios and earthquakes used, are shown in Table 3. The results in the table clearly indicate that the equivalent viscous damping produced by energy dissipaters friction-type is much than that existing in a bare steel frame ($\xi \approx 2\%$). It is also observed that the ξ_a values increase as the *R* parameter decrease. In addition, no correlation is observed between the values of ξ_a and the predominant period of the earthquakes or the fundamental period of the frames.

Table 3. Equivalent viscous damping for the dissipaters

EARTHQUAKE NUMBER	R=0.6			R=0.7			R=0.8			R=0.9		
	M1	M2	M3	M1	M2	M3	M1	M2	M3	M1	M2	M3
1	3.2	6.5	2.2	0.5	1.5	0.8	0.4	0.1	0.4	0.3	0.1	0.3
2	3.0	6.0	9.5	0.3	3.9	0.3	0.2	2.3	2.5	0.2	1.3	1.5
3	5.2	5.5	2.7	2.0	3.0	0.4	1.8	2.2	0.3	1.6	1.8	0.5
4	5.0	5.0	2.1	1.5	2.1	1.6	0.7	1.3	1.9	0.6	0.5	1.2
5	3.0	5.0	4.2	0.6	2.1	2.5	0.2	1.2	1.5	0.2	0.5	0.3
6	3.1	10.0	7.0	1.3	4.7	6.5	1.3	3.7	5.2	1.3	2.5	3.0
7	4.2	8.3	5.0	1.5	5.5	2.0	0.8	3.5	1.6	0.5	2.5	0.7
8	3.3	3.5	10.0	1.2	0.5	4.4	0.8	0.5	6.0	0.5	0.5	7.1
9	4.9	10.0	6.0	1.5	2.3	1.4	0.6	1.1	0.6	0.1	1.0	0.2
10	7.0	8.0	4.5	3.1	5.1	0.8	2.1	3.3	0.8	0.5	2.0	0.7
11	4.5	4.8	7.0	1.4	2.1	1.2	0.6	1.4	0.8	0.4	0.8	0.5
12	4.4	2.8	10.7	1.3	0.6	5.8	0.8	0.1	2.2	0.3	0.3	0.4
13	6.5	9.0	4.5	0.3	3.2	3.0	1.5	2.0	2.0	1.2	1.4	0.1
14	6.0	10.0	4.0	5.5	4.3	1.8	3.5	2.5	0.6	1.2	1.4	0.3
15	7.9	4.5	5.5	1.0	7.3	3.3	0.4	5.5	2.5	0.1	2.0	1.5
16	10.0	12.0	6.0	4.5	6.5	1.9	3.0	3.2	1.1	0.3	2.0	0.9
17	9.0	8.0	9.0	5.0	11.0	2.9	2.5	8.0	1.7	1.5	8.0	0.7
18	6.0	10.0	1.5	1.9	3.8	1.5	1.5	2.2	1.0	1.0	1.5	0.7
19	3.0	8.0	10.5	1.1	3.6	5.4	0.4	2.5	4.0	0.0	2.0	0.4
20	4.3	11.0	1.9	3.0	3.0	0.6	1.6	1.9	0.1	1.1	1.5	0.3
MEAN	5.2	7.4	5.7	1.9	3.8	2.4	1.2	2.4	1.8	0.7	1.7	1.1

CONCLUSIONS

The nonlinear seismic response of moment resisting steel frames with energy dissipation devices (EDD) friction-type is studied. The dissipaters are placed in the beam-column joint providing maximum flexibility for space utilization. Several moment resisting steel frames, representative of the short, medium and long period regions, and several strong motions, representative of medium and stiff local soil conditions, are used in the parametric study. In addition, the parameters of the device are modified to vary the magnitude of the friction force. Four levels of this parameter are considered. Obviously, the larger the magnitude of the friction force, the larger the magnitude of the maximum moment that can be developed at the end of the beams. The values of the ratio of these maximum moments to the plastic moment (M_p), denoted as R, are *0.6, 0.7, 0.8* and *0.9*, respectively. R=1.0 represent the frames without dissipaters. The authors and their associates developed a finite element-based algorithm to evaluate the nonlinear seismic response of steel frames in time domain. The algorithm is able to model the seismic behavior of steel frames, including EDD and is used in the study. The numerical study indicates that EDD based on friction of metals can reduce the seismic response of steel frames in terms of interstory displacements and interstory shears. It is observed that the reduction of the displacements decrease with the fundamental period of the frames, but the reduction in shears is similar for all the frames. No correlation is observed between the reduction of either displacements or shears with the predominant period of the earthquakes. It is important to emphasize that, while many plastic hinges are formed in the frame without energy dissipaters, no plastic hinges are formed, in general, in the frames with dissipaters. Only one o two plastic hinges are formed in the frames with $R = 0.9$ for a few cases. It indicates that using energy dissipaters friction-type protect the frames from significantly yielding**.** In order to quantify the effectiveness of the dissipater, the required equivalent viscous damping to produce the same level of reduction of base shear as that of the dissipater, is estimated. It is clearly shown that the equivalent viscous damping of energy dissipaters friction-type can be much larger than that existing in a bare steel frame ($\xi \approx 2\%$). Based on this finding, design response spectra for MRSF with energy dissipaters friction-type can be developed for specific sites by using appropriate amounts of equivalent viscous damping.

REFERENCES

1. Applied Technology Council (ATC). "Guidelines and Commentary for the Seismic Rehabilitation of Buildings". Report No. ATC-33-03, Redwood City, CA, 1995.
2. Pong WS, Tsai CS, Lee GC. "Seismic Study of Buildings Frames with Added Energy-Absorbing Devices". Technical Report NCEER-94-0016, State University of New York at Buffalo, 1994.
3. Pall AS, Verganalakis V, Marsh C. "Response of Friction Damped Braced Frames". Journal of Structural Engineering Division 1987, ASCE; 108(6): 1313-1323.
4. Aiken ID, Kelly JM. "Earthquake Simulator Testing and Analytical Studies of two Energy Absorbing Systems for Multistory Structures". Report No. UBC/EERC-90/03, University of California, Berkeley, October, 1990.
5. Pall AS. "Limited Slip Bolted Joints-A device to Control the Seismic Response of Large Panel Structures". PhD Thesis, University of Montreal, Canada, 1989.
6. Grigorian CE, Yang TS, Popov E. "Slotted Bolted Connection Energy Dissipaters". Earthquake Spectra 1993; 9(3): 491-504.
7. Filiatrault A, Cherry S. "Performance Evaluation of Friction Damped Braced Steel Frames Under Simulated Earthquake Loads". Earthquake Spectra 1997; 3(1): 57-78.
8. Kullmann HG, Cherry S. "Full-scale testing of Concentrically Braced and Friction-Damped Braced Steel Frames Under Simulated Seismic Loading". Proceedings of the 11th World Conference on Earthquake Engineering, Acapulco, México. Paper No. 958. Oxford: Pergamon, 1996.

9. Zhao XM, Ha KH. "Friction Connections for Seismic Control of Moment Resisting Steel Frames". Proceedings of the 11th World Conference on Earthquake Engineering, Acapulco, México. Paper No. 1963. Oxford: Pergamon, 1996.
10 Gao L, Haldar A. "Nonlinear Seismic Response of Space Structures with PR Connections". International Journal of Microcomputers in Civil Engineering 1995; 10:27-37.
11. Reyes-Salazar A. "Inelastic Seismic Response and Ductility Evaluation of Steel Frames with Fully, Partially Restrained and Composite Connections". PhD Thesis, Department of Civil Engineering and Engineering Mechanics, University of Arizona, Tucson, AZ, 1997.
12. Kondoh K, Atluri SN. "Large Deformation, Elasto-Platic Analysis of Frames Under Non-Conservative Loading, Using Explicitly Derived Tangent Stiffness Based on Assumed Stress". Computer Mechanics 1987; 2(1): 1-25.
13. Richard RM. "Moment-Rotation Curves for Partially Restrained Connections". PRCONN, RMR Design Group, Tucson, Arizona, 1993.
14. Reyes-Salazar, A. Haldar A. "Dissipation of Energy in Steel Frames with PR Connections". Structural Engineering and Mechanics, An International Journal 2000; 9(3): 241-256.
15. Roeder CW, Scheiner SP, Carpenter J. "Seismic Behavior of Moment-Resisting Steel Frames: Analytical Study". Journal of Structural Engineering ASCE 1993; 119(6):1866-1884.