13th World Conference on Earthquake Engineering
Vancouver, B.C., Canada
August 1-6, 2004
Paper No. 1511

ANALYSIS OF THE CUT AND COVER TUNNELS DAMAGED IN THE SOUTH-HYOGO EARTHQUAKE OF 1995

Seiji NISHIYAMA[1], Itsuo KAWAMA[2], Hiroshi HAYA[3]

SUMMARY

In the South-Hyogo Earthquake of 1995, not only structures on the ground, but also some underground structures were heavily damaged. It is not rational to design a structure that will not yield an inch in such strong seismic motions with recurring time of period longer than one thousand years. Permissible damage extent must be clearly described in their designs.

In this study, failure sequences of the structures damaged in the South-Hyogo Earthquake of 1995 were examined by using the conventional Seismic Deformation Method. Cracks were found on center columns and sidewalls, and the damage extent ranged from minor cracks to entire collapses. The analyses showed that RC center columns sustaining the ceiling of Daikai station were cracked in shear, while the walls of the general part for double tracks were cracked in bending, the latter performed better in general. However, as the deformation became larger, much more time and trouble were needed for repairing. The bending deformation, thus, should be within an allowable limit. The present Seismic Deformation Method explained the sequence of the damage rationally.

The serviceability of damaged tunnel is related to the levels of trouble for repairing, and the trouble for repairing was described in terms of damage extent to structural members. The idea for describing both serviceability and trouble for repairing was also verified by comparing the analytical results with the real damage.

INTRODUCTION

In the South-Hyogo Earthquake of 1995, not only structures on the ground, but also some underground structures were heavily damaged. There was no precedent for the severe damage to these underground structures, and for this reason, due attention had never been paid to seismic designs for cross-sections of underground structures excluding important facilities and those constructed in soft soils. This earthquake however urged us to develop a new seismic design method accounting for such intense seismic motions as the South-Hyogo Earthquake.

It is not rational to design a structure that will not yield an inch in strong seismic motions with recurring time of period longer than one thousand years. Permissible damage extent must be explicitly

[1] Senior Engineer, Nikken Sekkei Civil Engineering, Tokyo, Japan. Email: nishiyama@nikken.co.jp
[2] Manager, Nikken Sekkei Civil Engineering, Tokyo, Japan. Email: kawama@nikken.co.jp
[3] Chief researcher, Railway Technical Research Institute, Japan. Email: haya@rtri.or.jp

described in their designs. However, the behavior of an underground structure experiencing an intense earthquake motion has not been made entirely clear.

Hence, failure sequences of the structures damaged in the South-Hyogo Earthquake of 1995 are examined by using the conventional Seismic Deformation Method. The idea that permissible damage extent is described in terms of both serviceability and trouble for repairing is also verified by comparing the analytical results with the real damage.

OUTLINE OF DAMAGE TO SUBWAY TUNNELS

Subway tunnels

Fig.1 and Fig.2 shows subway tunnels studied in this paper, which are Daikai station, Turnout part and general part (D3, D4).

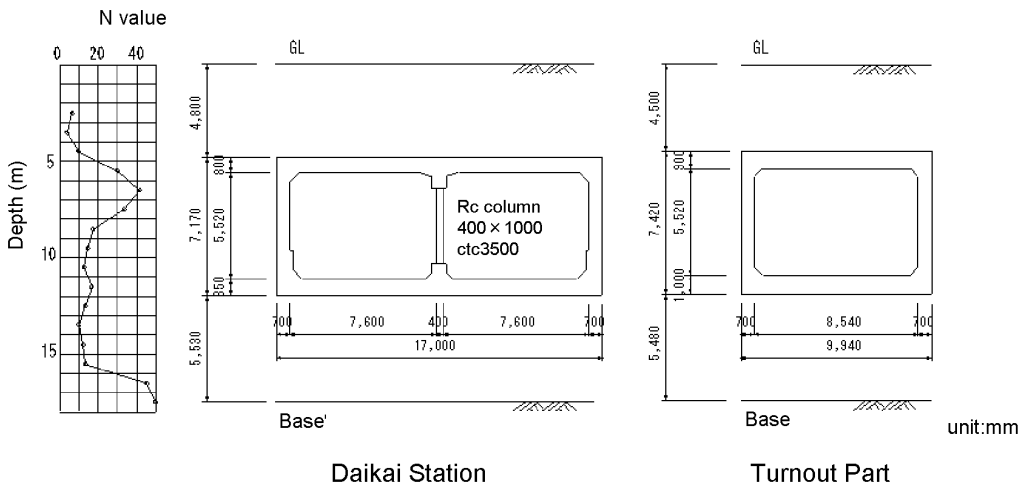

Fig.1 Typical section of Daikai station and Turnout part

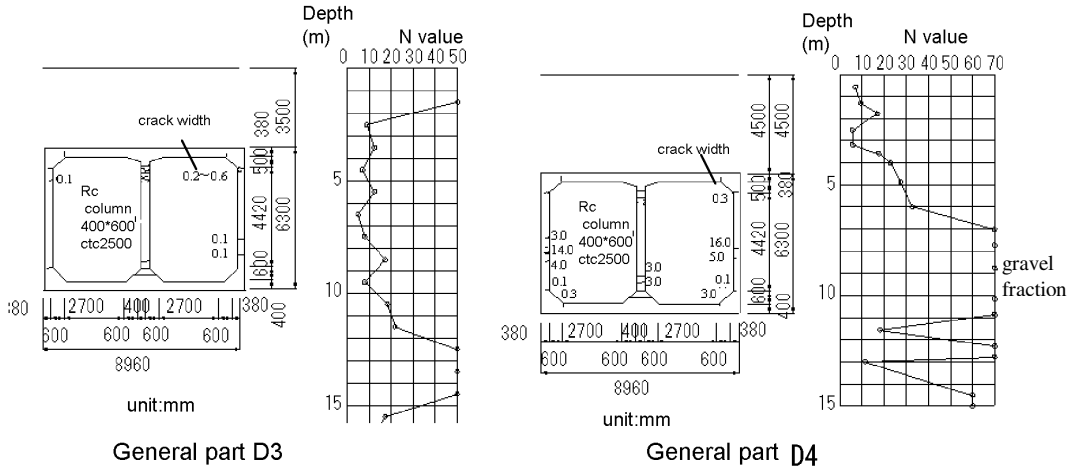

Fig.2 Typical section of general part of D3 and D4

Outline of damage

The damage pattern of cut and cover tunnel was seen mainly on RC columns and upper and lower corners of sidewall.

Damage to Daikai station was the severest. Fig.1 (1) shows a typical section of Daikai station. The center RC column suffered heavily. Separation between concrete and reinforcement, which was caused by bending of the axial reinforcement, was observed. Many hoop bars broke. At the corner of sidewall, many cracks and deformation were observed, but there was no severe damage on other components such as center RC columns.

Fig.1 (2) shows a section of turnout part near the station. At this section, one-story and one-span rigid frame structure, there was no severe damage except cracks at sidewall corners. As it is located near the station, this section should have been subjected to the same earthquake motion as that for the station. However, there was no serious damage. The differences of damage might be due to structural reason.

Fig.2 (1) shows a section of the general tunnel part D3 for double tracks, which has a one-story and two-span rigid frame structure. Compared to Daikai station, it has a smaller section area but the structural form is similar to that of the station. However, its damage was minor with some cracks observed at center RC column and sidewall. The subsoil surrounding the structure is soft compared to that of the station, and large ground deformation should have occurred, but its damage was minor. Not all structures that have RC columns received severe damage.

Fig.2 (2) shows the general part D4 for double tracks, which has almost same structural form with D3. However, the thickness of overburden soil is 1m larger than that of D3 part. Sidewalls cracked at center, the width of crack were mostly from 14mm to 16mm (maximum 26mm). Damage to RC column was minor as same as that of D3 section.

DAMAGE ANALYSES

Analytical Method

Seismic Deformation Method

Damage process is studied using by a Seismic Deformation Method. In this method, a tunnel is described as a frame structure supported by discrete soil springs through which the motion of the surrounding soil is given. To estimate the spring coefficients of soil, a simplified formula is used according to the design code for Japanese railway structures.

The structure was modeled by using beam elements. Fig.3 shows a nonlinear characteristics modeled by the relation between moment and curvature using a tri-linear model, which represents Mc (crack point), My (yielding point of steel bar) and Mu (ultimate strength). The point m means the deformation when the cover concrete is spalling. In addition, the point n is the deformation that the RC member could maintain load when a reinforcing-bar yielding. The nonlinear property are estimated according to the Japanese seismic design code for railway structures.

Compressive strength of concrete was 38kN/mm^2, Yield strength of axial and shear reinforcement were 312kN/mm^2 based on a previous research.

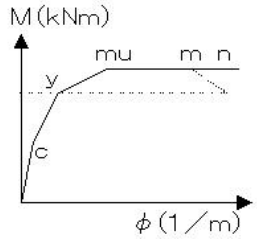

Fig.3 The relationship between bending moment and curvature

Dynamic analysis of ground

To carry out the Seismic Deformation Method, ground motions such as displacement, shear stress and acceleration have to be investigated in advance. Dynamic analysis of ground is carried out by the equivalent linear method. KOBE port-island wave (GL-83, NS Component) was used as an input motion. Strain-dependent characteristics of shear modulus and damping ratio were taken into consideration.

ANALYSIS OF DAIKAI STATION

Dynamic analysis of ground

The soil profile and the material properties at Daikai station site are shown in Fig.4. The dynamic analysis of free field was carried out. Fig.4 shows the distribution of ground response at the time when the relative displacement between ceiling and bottom slab is the maximum (4.1cm).

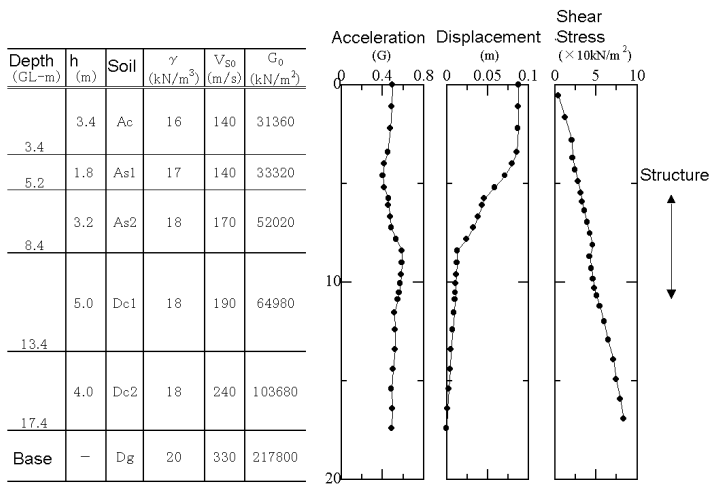

Fig.4 Soil properties and response of ground (Daikai station and Turnout part)

Seismic deformation Method

Fig.5 shows the relation between the relative displacement between ceiling and bottom slabs and the total shear force of the structure. The total shear force of structure was calculated by summing the shear force of sidewall and center column.

As shown in Fig.5, the shear failure of center column occurred when the relative displacement was 2.0cm. Damage other than the yield of steel bar wasn't recognized on other members. After subsequent loading, the yield of center column occurred when the relative displacement was about 25mm, but no members were in the ultimate state. Therefore, the failure mechanism of Daikai station is thought to be as follows; the ceiling slab failed for lack of load carrying capacity of center column because of the shear failure. This result corresponds to the damage pattern observed.

Therefore, it has been clarified that preventing a shear failure is very important for seismic design.

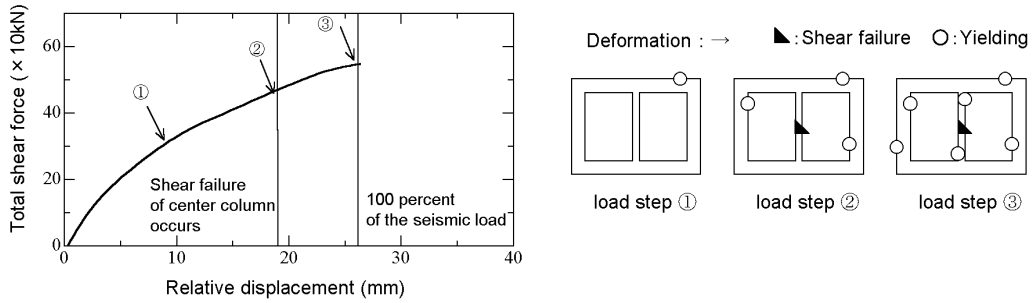

Fig.5 The relationship between the total shear force and the displacement of the ceiling to base slab (Daikai station).

ANALYSIS OF TURNOUT PART

Dynamic analysis of ground

Turnout section located at the east end of Daikai station. The soil profile near the turnout part would be similar to that at Daikai station. Hence, the response of free field at Daikai station was also used to turnout part.

Seismic deformation Method

The relation between relative displacement and total shear force of the structure is shown in Fig.6. The seismic load obtained from free field ground motion was multiplied three times proportionally so as that the deformation of tunnel reaches ultimate state.

Some yield at corners occurred when the relative displacement reaches 20mm. The deformation at the upper corner of right wall reached ultimate state (the point m) when the relative displacement was 120mm. However, no shear failure occurred at any point.

The relative displacement at 100 percent of the seismic load was 30mm. This shows the major damage of walls remain within yielding range at sidewall corners. This result also corresponds to the observed damage.

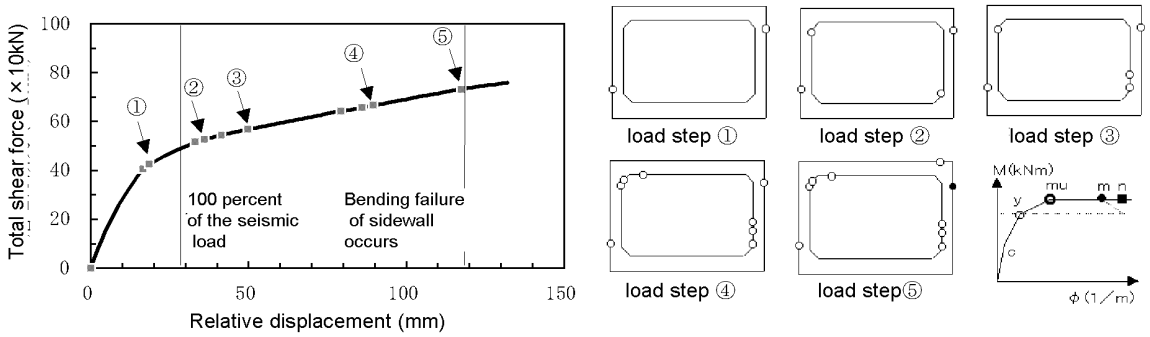

Fig.6 The relationship between the total shear force and the displacement of the ceiling to base slab (Turnout part).

Study of damage sequence

Turnout part was near Daikai station. Nevertheless, the damage was slight compared to the station. The analyses showed that RC center columns sustaining the ceiling of Daikai station were cracked in shear, while the walls of the turnout part was cracked in bending, the latter performed better in general.

ANALYSIS OF GENERAL PART D3 FOR DOUBLE TRACKS

Dynamic analysis of ground

The soil profile and the material properties at general part D3 for double tracks is shown in Fig.2 and Fig.7. The shear wave velocities were set according to the investigation at Daikai station site.
Input motion for the dynamic analysis of free-field ground was the same with that used in Daikai station. Fig.7 shows the distribution of ground response at the time when the relative displacement between ceiling and bottom slab is the maximum. The maximum relative displacement was 5.4cm.

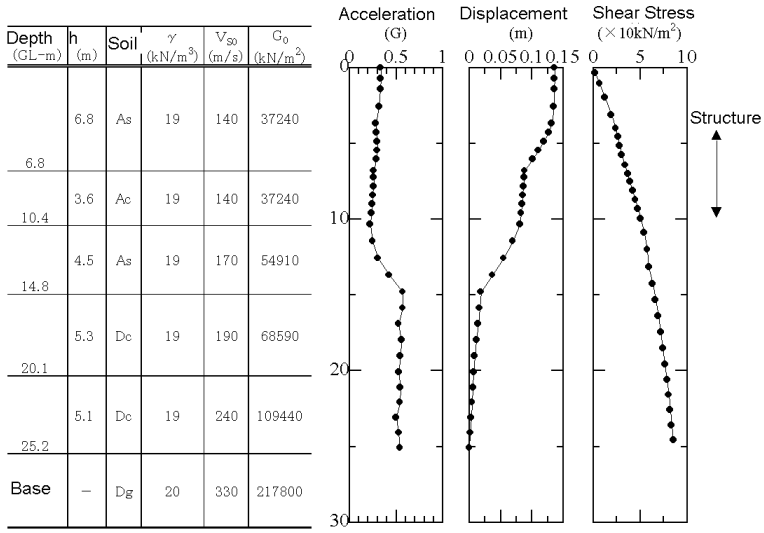

Fig.7 Soil properties and response of ground (general part D3)

Seismic deformation Method

The relation between relative displacement and total shear force of the structure is shown in Fig.8. The seismic load obtained from free field ground motion was multiplied two times proportionally so as that the deformation of tunnel reaches ultimate state.

At the center RC column, yielding occurred when the relative displacement reaches 50mm. The deformation reached point mu, point m and point n when the relative displacement is 60mm, 100m and 150mm, respectively. No shear failure occurred.

At sidewalls, yield occurred when the relative displacement reaches 10mm. The deformation reached point m when the relative displacement is 120mm.

The relative displacement at 100 percent of the seismic load was 75mm. This shows the damage to center RC column does not reach point m, where cover concrete spalling. Deformation at the corner of sidewall remains the range that is a little larger than yielding. This result also corresponds to the observed damage.

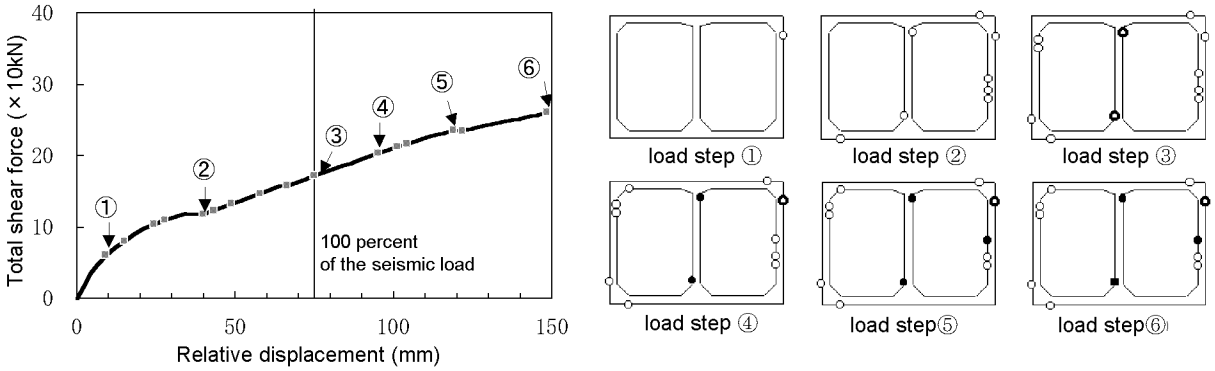

Fig.8 The relationship between the total shear force and the displacement of the ceiling to base slab (general part D3).

Study of damage sequence

The ratios of shear strength to bending strength of center column are shown in Table 1. That of Daikai station is 0.90, while the general section, D3 for double tracks is 1.45. At the center column of Daikai station, the shear failure occurred earlier than the bending failure. However, at the column of D3 section, bending failure occurred earlier than shear failure. These characteristics of center columns and the deformation capability of members would be causes of differences in damage.

Table 1 The ratios of shear strength to bending strength of RC center columns

	Daikai station	General part D3	General part D4
Vy·la/Mu	0.90	1.45	1.56

Vy: shear strength, la: Shear span, Mu: bending strength in moment

ANALYSIS OF GENERAL PART D4 FOR DOUBLE TRACKS

Dynamic analysis of ground

The soil profile and the material properties at general part D4 for double tracks is shown in Fig.9. The shear wave velocities were set with the same procedure as that of D3 site.

Input motion for the dynamic analysis of free-field ground was also same with that used in Daikai station. Fig.9 shows the distribution of ground response at the time when the relative displacement between ceiling and bottom slab is the maximum. The maximum relative displacement was 8.6cm.

Depth (GL−m)	h (m)	Soil	γ (kN/m³)	V_{S0} (m/s)	G_0 (kN/m²)
1.2	1.2	As	19	140	37240
4.5	3.3	As	19	140	37240
10.4	5.9	As	19	170	54910
13.4	3.0	Dc	19	190	68590
17.4	4.0	Dc	19	240	109440
Base	—	Dg	20	330	217800

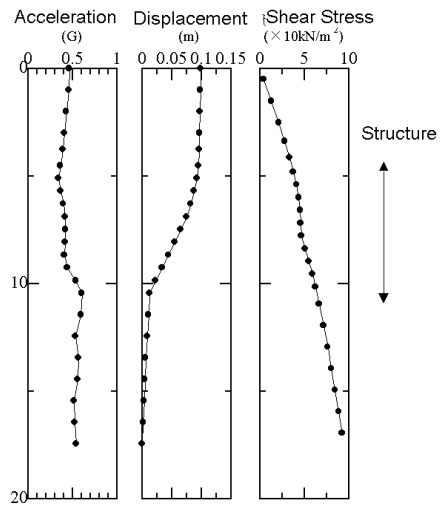

Fig.9 Soil properties and response of ground (general part D4)

Seismic deformation Method

Analytical results are shown in fig10. The seismic load was multiplied two times proportionally so as that the deformation of tunnel reaches ultimate state.

At the center RC column, Yielding occurred when the relative displacement reaches 30mm. The deformation reached point m and point n when the relative displacement is 100m and 140mm, respectively. No shear failure occurred.

At the sidewall, yielding occurred when the relative displacement reaches 40mm, and yielding occurred at some continuous element near the center of sidewall when the relative displacement is 120mm. The total deformation calculated by sum of those of yielding elements reaches point m. This is one of possible explanation of wide crack of sidewall.

The relative displacement at 100 percent of the seismic load was 140mm. This shows the damage to RC does not reach point m, where cover concrete spalling. Sidewall at the center cracked widely in bending if the deformation of sidewall were focused in one element. This result also corresponds to the observed damage.

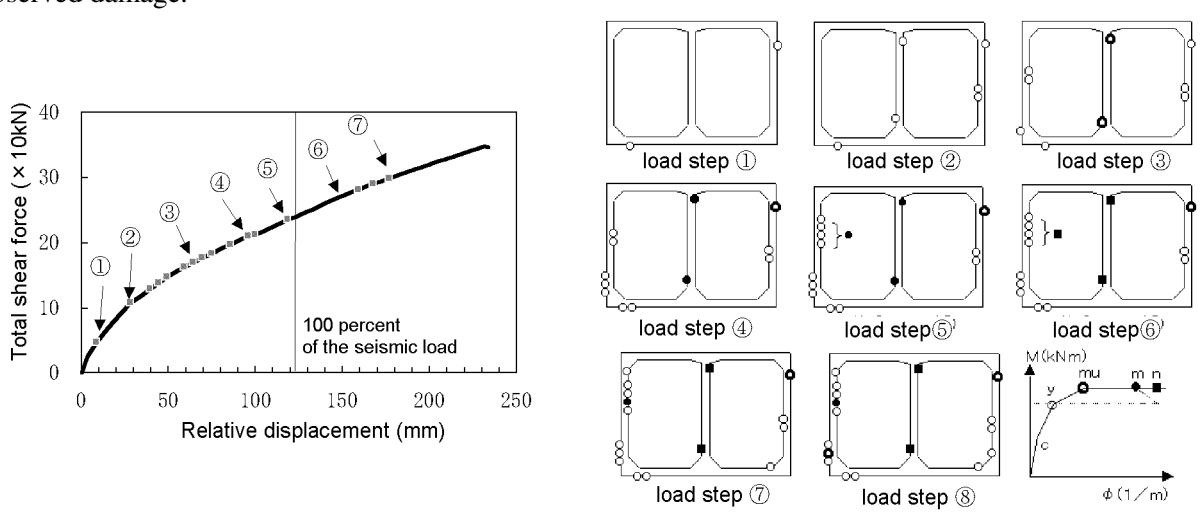

Fig.10 The relationship between the total shear force and the displacement of the ceiling to base slab (general part D4).

Study of damage sequence

Table1 shows that the ratio of shear strength to bending strength at the center column of D4 section is 1.56, thus no shear failure occurred earlier than the bending failure.

The difference of damage to sidewall compared to that of D3 section is thought as follows; The thickness and reinforcement of sidewall were same with those of D3 section, but the thickness of overburden soil is 1m larger. In addition, the lateral earth pressure at that time of design was about 40 percent smaller than that used in the latest design. For these reason, Sidewall of D4 section had larger stress before an earthquake. The seismic action, such as shear deformation of ground, might enlarge the stress and deformation at the walls.

The present Seismic Deformation Method explained the sequence of the damage rationally.

SEISMIC DESIGN FOR INTENSE EARTHQUAKE

Serviceability of damaged tunnel

For larger earthquakes such as the South-Hyogo earthquake, it is rational to design structures to permit some damage. In the seismic design code for Japanese railway structure, which is proposed through the experience of the South-Hyogo earthquake, three levels of structural performance are showed in view of serviceability of damaged tunnel.

The serviceability of damaged tunnel is related to the levels of trouble for repairing, and the trouble for repairing was described in terms of damage extent to structural members. The idea for describing both serviceability and trouble for repairing is proposed as shown in Fig11 and Table 2.

The performance of serviceability of tunnel classified into three. At the performance I, almost no restoration work is needed. At the performance II, some restoration works are needed but the serviceability could be repaired in relatively shorter time. At the performance III, much more time and trouble are needed for repairing.

The damage extent of a member is classified into four levels. The level 1 is within the state of the yield point of reinforcing bar. The level 2 is within the maximum bending strength, where the cover concrete spalling. The level 3 is within the limit that can maintain the yield strength. The level 4 is the state when it is impossible to permit deformation in the axial direction.

Table.2 Structural performance of damaged tunnel

Structural performance of damaged tunnel		I	II	III
Damage extent to members (Level 1~ Level 4)	Ceiling and bottom slab	1	2	3
	Middle slab that supports trains	1	2	3
	Middle slab that doesn't support trains	1	3	4
	Sidewall	1	2	3
	Center column	1	3	3
Stability of a structure		1	2	3

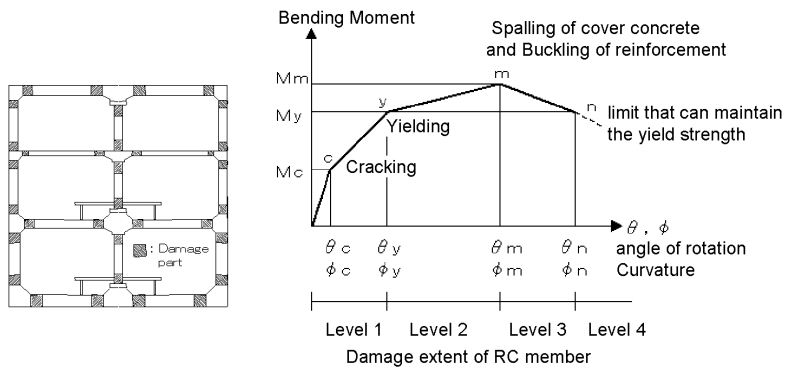

Fig.11 Damage extent to members

Verification of proposed level for performance of damaged tunnel

The idea for describing both serviceability and trouble for repairing is verified by comparing the analytical results with the real damage.

Table.3 and Fig12 show the analytical results summarized in terms of damage extent of member. Cracks appeared on RC center columns were categorized into two patterns; shear cracks and bending cracks. The analyses showed that RC center columns sustaining the ceiling of Daikai station were cracked in shear, while those of the general part for double tracks were cracked in bending.

Repairing shear cracks required a lot of labor and time as contrasted with bending cracks, and therefore, RC members are desirable to be cracked not in shear but in bending.

However, for sidewall of D4 section the deformation became larger, much more time and trouble were needed for repairing. As the restoration of D4 section, H-shaped beams were set along on the inner perimeter except for base slab. The bending deformation, thus, should be within an allowable limit. In this case, deformation of side wall estimated by the analysis reaches the damage extent 4, and it needed so much time to restoration. Judging from real damage, damaged tunnel belonged to the performance III, which corresponded to the proposed relation in Table 2.

Table.3 Failure pattern of members and estimated response

	Member	Failure pattern at the ultimate state	Estimated response compared to the ultimate state	The ratio of shear strength to bending strength
Daikai Station	RC column	Shear	Larger	0.90
Turnout part	Sidewall	Bending	Smaller	----
General part D3	RC column	Bending	Smaller	1.45
	Sidewall	Bending	Smaller	----
General part D4	RC column	Bending	Smaller	1.56
	Sidewall	Bending	Nearly equal	----

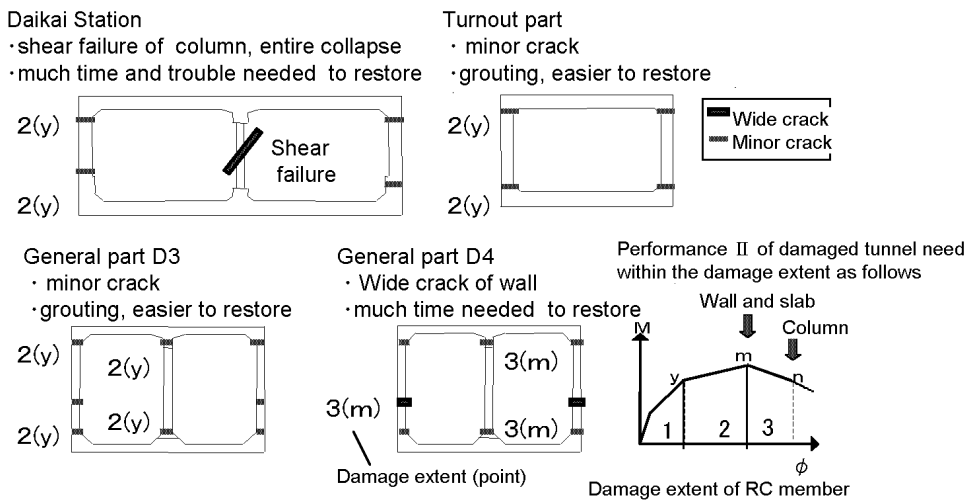

Fig.12 Estimated damage extent to members compared to the restoration from real damage

CONCLUSION

Failure sequences of the structures damaged in the South-Hyogo Earthquake of 1995 were examined by using the conventional Seismic Deformation Method.

Cracks were found on center columns and sidewalls, and the damage extent ranged from minor cracks to entire collapses. The analyses showed that RC center columns sustaining the ceiling of Daikai station were cracked in shear, while the walls of the general part for double tracks were cracked in bending, the latter performed better in general. However, as the deformation became larger, much more time and trouble were needed for repairing. The bending deformation, thus, should be within an allowable limit. The present Seismic Deformation Method explained the sequence of the damage rationally.

The serviceability of damaged tunnel is related to the levels of trouble for repairing, and the trouble for repairing was described in terms of damage extent to structural members. The idea for describing both serviceability and trouble for repairing was also verified by comparing the analytical results with the real damage.

REFERENCES

1. Iida, H., Hiroto, T., Yoshida, N., Iwafuji, M.(1996). Damage to Daikai subway station, "Special issue on Geotechnical Aspects of the January 17 1995 Hyogoken-Nanbu Earthquake", Soils and Foundation, pp.283-300
2. Railway Technical Research Institute (1999), Design Standard for Seismic Design of Railway Structures