13th World Conference on Earthquake Engineering
Vancouver, B.C., Canada
August 1-6, 2004
Paper No. 1460

APPROXIMATE METHOD FOR EVALUATION OF SEISMIC DAMAGE OF RC BUILDINGS

Massimiliano FERRAIOLI[1], Alberto Maria AVOSSA[2], Pasquale MALANGONE[3]

SUMMARY

An approximate method for the estimation of the seismic damage of r.c. multistory buildings is presented. The method is based on the Capacity Spectrum Method and the Inelastic Demand Response Spectra which are obtained with a reduction rule defined from a statistical data analysis. The local damage index was defined with an improved Park & Ang model starting from the pushover analysis of the building and the nonlinear dynamic analysis of the equivalent bilinear SDOF system. The approximate method was applied to r.c. multistory buildings when subjected to earthquake ground motion. The results obtained are compared with those computed using step-by-step time history analysis of the structure.

INTRODUCTION

The building codes generally use strength as the main design criterion and they consider the lateral force procedure at the base of the earthquake resistant design. The displacement control usually plays a secondary role, and the deformation demands are usually checked at the end of the design process for the serviceability limit state. This conventional approach may be ineffective in the limitation of damage under severe earthquakes. In fact there exists a good correlation between damage and interstory drift ratio, while strength and lateral displacement are very weakly correlated. Furthermore, the strength criterion alone may be ineffective to assure the formation of the wished plastic mechanism, and to guarantee that the damage is limited and the repair costs are tolerable. On the other side, the damage control can be achieved with the limitation of the lateral displacements and drifts, which depends not only from the strength, the stiffness and the energy dissipation capacity of the building, but also from the input energy of the earthquake ground motion. The calculation of the lateral deformations with the Nonlinear Response History Analysis (NRHA) creates some problems. In fact, this analysis method requires additive input data (hysteretic models, earthquake ground motions) and the results are very sensitive to these parameters.
As an alternative, in the latest years a great number of simplified non linear static procedures (NSP) were proposed. Some of them were incorporated in the new generation of seismic codes to determine the deformation demand imposed on a building expected to behave inelastically. A simplified procedure based on the pushover analysis and on the strength reduction factor was introduced in the more recent

[1] Graduate Research Assistant, Second University of Naples, Italy, Email: massimo.ferraioli@unina2.it
[2] Phd student, Second University of Naples, Italy, Email: albertomaria.avossa@unina2.it
[3] Professor, Second University of Naples, Italy, Email: pasquale.malangone@unina2.it

drafts of Eurocode 8 [1]. Static Displacement-Based Procedures were developed by the Federal Emergency Management Agency (FEMA [2]). In particular, the Displacement Coefficient Method (DCM) calculates displacement in yielding buildings as the product of the elastic spectral displacement and coefficients C_i. The Capacity Spectrum Method (CSM) - by means of a graphical procedure - compares the capacity of the structure to resist lateral forces to the demands of earthquake response spectra. ATC-40 [3] proposes three nonlinear static procedures (A,B,C) based on the CSM and on the High Damping Elastic Response Spectra (HDERS). However several deficiencies were found by some authors. There is no physical principle that justifies the existence of a stable relationship between the hysteretic energy dissipation and equivalent viscous damping, particularly for highly inelastic systems. So the Procedure A in some cases did not converge, and in many cases it converges to a deformation much different than the NRHA and the Inelastic Design Spectrum.

The N2 method proposed by Fajfar [4] combines together the visual representation of the CSM and the superior physical basis of Inelastic Demand Response Spectra (IDRS) which are expected to be more accurate than HDERS, especially in the short period range and in the case of high ductility factors. The IDRS were obtained not with the NRHA of the structure under available earthquake ground motions, but with the scaling of the elastic spectra through the use of strength reduction factors. Knowing the seismic demand and capacity the N2 method was also used for the estimation of a damage index for each structural member. However, strong discrepancies between the NRHA and the pushover analysis may occur in the case of strong variation of the axial load in columns (exterior columns of the lower story of tall and slender buildings) and in the gravity load dominant frames where plastic hinges form in beams. In such cases the cumulative inelastic deformation under displacement reversals may be additive, and so the pushover analysis can underestimate the local cumulative plastic rotations.

Both the capacity of the structure and the seismic demand considered by the aforementioned NSP are defined without taking into account the effects of the cumulative damage. In fact, the capacity spectrum is defined starting from the force-displacement relationship obtained by pushover analysis with monotonically increasing loading. The first objective of this work is to develop an analysis procedure for the evaluation of the structural and non-structural damage of reinforced concrete framed buildings under earthquake strong ground motions. This procedure retains the conceptual simplicity and computational effectiveness of the pushover analysis with invariant force distribution, and uses the Inelastic Demand Response Spectra (IDRS) for the estimation of the target displacement.

APPROXIMATE METHOD FOR EVALUATION OF SEISMIC DAMAGE

Capacity of the structure

In this paper the seismic demand is obtained from the nonlinear static analysis of the structure subjected to monotonically increasing lateral forces with an invariant high-wise distribution. In other words, the capacity of the structure is calculated on the hypothesis that the response is controlled by the fundamental mode and the vibration properties remain unchanged in spite of the structure yielding. These predictions are restricted to low-rise and medium-rise buildings, regular in plane and in elevation, with yielding distributed throughout the height of the structure. Chopra *et al.* [5] proposed a Modal Pushover Analysis (MPA) for estimating seismic response of buildings even when the higher modes contribution is very high. This contribution may be also considered with the definition of an equivalent fundamental mode [6] or an equivalent lateral force distribution [7], which are determined through a combination of vibration modes using the SRSS combination. Furthermore, many authors have proposed methods to extend the application of pushover analysis to irregular in plane buildings. On the other side, an adaptive force distribution should be used to approximate the time-variant distribution of the inertia forces. This approach can give better estimations of the inelastic response, but it is conceptually complicated and computationally demanding for the application in structural engineering practice.

Structural model

The beams and columns of the framed building were modeled with rigid end zones at the connection joints, elastic and fiber plastic elements (fig.1). Each fiber was modeled with the nonlinear stress-strain relationship of the material it was made. In particular, the cross section is composed of fibers of three different material types: confined concrete for the core, unconfined concrete for the cover, and steel for the longitudinal bars. Steel was modeled with an elastic-plastic-hardening relationship. The confined concrete was modeled with stress-strain relationships incorporating the relevant parameters of confinement (section geometry, concrete strength, type and arrangement of transverse reinforcement, its volumetric ratio, spacing and yield strength) [8,9]. The strength f'_{cc} of the confine concrete was estimated with the following approximate relationships (fig.2):

$$f'_{cc} = f'_{co} + K_1 \cdot f_{le} \qquad K_1 = 6.7 \cdot \left(f_{le}\right)^{-0.17} \qquad f_{le} = \frac{f_{le,x} \cdot b_{c,x} + f_{le,y} \cdot b_{c,y}}{b_{c,x} + b_{c,y}} \tag{1}$$

where f'_{co} is the strength of unconfined concrete, f_{le} is the equivalent uniform lateral pressure, $f_{le,x} = K_{2x} \cdot f_{l,x}$ and $f_{le,y} = K_{2y} \cdot f_{l,y}$ are the two equivalent lateral pressure acting perpendicular to core dimensions b_{cx} and b_{cy}, respectively. The coefficients K_{2x} and K_{2y} reflect the efficiency of reinforcement arrangement. In fact, the effectiveness of lateral pressure decreases in the transverse direction as an effect of the spacing between ties, and in the longitudinal direction as an effect of the spacing between hoop bars. As an alternative to relationships based on the definition of a reduced effective area of the concrete core, the following expressions derived from the statistical analysis of tests data were applied:

$$K_{2x} = 0.26 \cdot \sqrt{\frac{b_{cx}^2}{s \cdot s_{Lx} \cdot f_{l,x}}} \qquad K_{2y} = 0.26 \cdot \sqrt{\frac{b_{cy}^2}{s \cdot s_{Ly} \cdot f_{l,y}}} \tag{2}$$

The stress-strain relationship proposed by Popovics [10] was adopted. The tangent modulus E_c was calculated with the formula $E_c = 3320\sqrt{f_{co}} + 6900 > E_{sec}\ (MPa)$ suggested by Carrasquillo et. al.[11].

The strain ε_1 at the maximum confined concrete stress is estimated as a function of the strain ε_{01} at the unconfined concrete strength, as follows:

$$\varepsilon_1 = \varepsilon_{01} \cdot \left(1 + 5 \cdot K_3 \cdot K\right) \qquad \varepsilon_{01} = 0.0028 - 0.0008 \cdot K_3 \qquad K = K_1 \cdot f_{le} / f'_{co} \qquad K_3 = \frac{40}{f'_{co}}\ \left(MPa\right) \tag{3}$$

The slope of the descending branch of the stress-strain relationship is defined by the strain ε_{85} corresponding to 85 per cent of peak stress:

$$\varepsilon_{85} = \varepsilon_{085} + 260 \cdot K_3 \cdot \rho_s \cdot \varepsilon_1 \left[1 + 0.5 \cdot K_2 \cdot \left(K_4 - 1\right)\right] \qquad \varepsilon_{085} = \varepsilon_{01} + 0.0018 \cdot K_3^2 \tag{4}$$

where ρ_s is the volumetric percentage of transverse reinforcement, and $K_4 = f_{yt} / 500$.

Finally, the ultimate compressive strain ε_{cu} of confined concrete is calculated with the following parametric expression in which ε_{su} is the ultimate tensile strain of steel:

$$\varepsilon_{cu} = 0.004 + 1.4 \cdot \rho_s \cdot f_{yt} \cdot \varepsilon_{su} / f'_{cc} \tag{5}$$

Equivalent Bilinear Capacity Spectrum

The static nonlinear pushover analysis of the framed building gives the Capacity Curve (CC) of the structure in terms of base shear V and roof displacement δ_{TOP}. Such curve is transformed to the space of spectral displacement S_d and spectral pseudo-acceleration S_a (Capacity Spectra - CS). At this aim the MDOF 3D model is converted in a SDOF system with equivalent mass and stiffness. The displacement *d* of this system is equal to the lateral displacement of the structure at the height H_{eq} where

$\boldsymbol{PF}_1(H_{eq})=\Gamma_1\cdot\boldsymbol{\phi_1}(H_{eq})=1$, in which $\boldsymbol{PF}_1$ is the participation vector of the fundamental mode $\boldsymbol{\phi_1}$. For a distribution of lateral forces F_i and displacements δ_i the following expressions defining the mass, the stiffness and the period of SDOF equivalent system are found:

$$\underline{M}_1=\sum_{i=1}^{N}m_i\cdot\delta_i^2\Big/d^2=\left(\sum_{i=1}^{N}m_i\cdot\delta_i\right)^2\Big/\sum_{i=1}^{N}m_i\cdot\delta_i^2 \qquad \underline{K}_1=\sum\nolimits_{i=1}^{N}F_i\cdot\delta_i\Big/d^2 \qquad T=2\pi\sqrt{\frac{\underline{M}_1}{\underline{K}_1}} \tag{6}$$

The Capacity Spectra in ADRS format (Acceleration-Displacement Response Spectra) is obtained by means of the following equations:

$$S_a=V\cdot\frac{\sum_{i=1}^{N}m_i\cdot\phi_{i1}^2}{\left(\sum_{i=1}^{N}m_i\cdot\phi_{i1}\right)^2}=\frac{V}{\alpha_1\cdot W}\cdot g \qquad S_d=S_a\frac{\sum_{i=1}^{N}m_i\cdot\phi_{i1}^2}{\sum_{i=1}^{N}F_i\cdot\phi_{i1}}=\frac{\phi_{i1}}{\Gamma_1\cdot\phi_{i1}}=\frac{\delta_{TOP}}{\boldsymbol{PF_1}(N)} \tag{7}$$

where W is the seismic weight of the building; m_i and ϕ_{i1} are mass and the component of the fundamental mode shape at the ith floor; α_1, Γ_1 and $\mathbf{PF_1}$ are the corresponding modal mass ratio, participation factor and participation vector. Finally, the CS is approximated with a bilinear form (Bilinear Capacity Spectra – BCS). In particular, the elastic stiffness and the yielding displacement S_{dy} are independent from the value of the Performance Point (PP). The first parameter is given by the initial slope of the CS. The second one is characterized by the minimum discard condition between the CS and the BCS. On the contrary, the value of the post-elastic stiffness K_{pe} is a function of the PP.

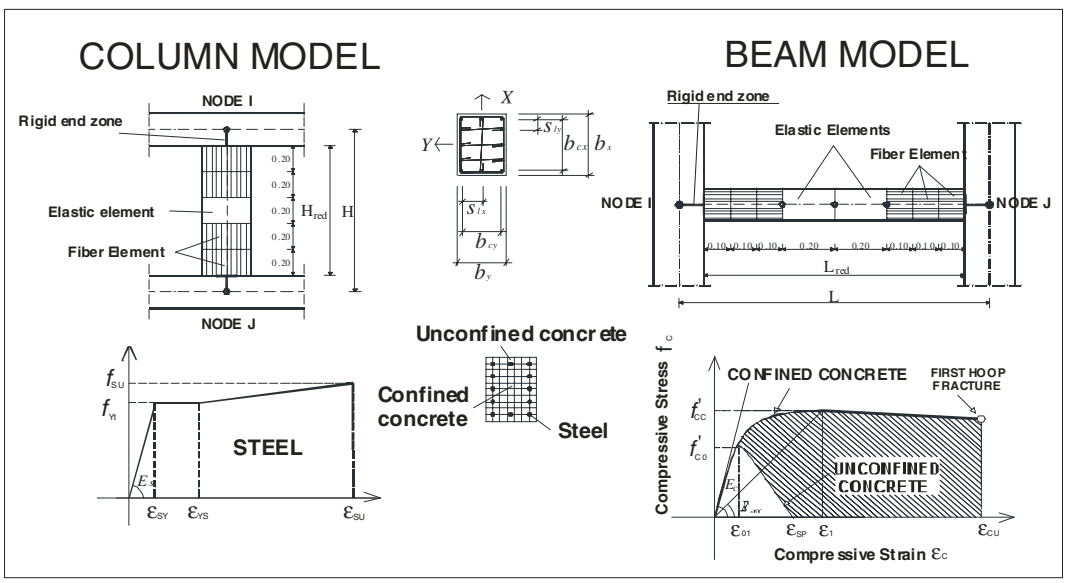

Figure 1: Structural model for beams and columns

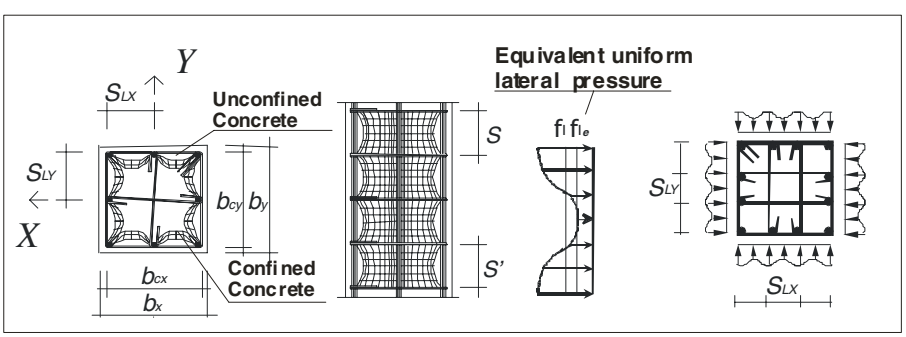

Figure 2: Confining pressure as an effect of arching action

Inelastic Seismic Demand

The seismic demand is generally represented by means of the Inelastic Demand Response Spectra (IDRS). In this paper the IDRS are not directly obtained through the nonlinear time-history analysis of the equivalent bilinear SDOF system, but they are indirectly computed scaling the Elastic Demand Response Spectra (EDRS). Such scaling may be realized with two alternative approaches. The first one is based on the definition of High Damping Elastic Response Spectra (HDERS) by means of the equivalence between the viscous damping energy dissipation and the hysteretic energy dissipation. In the second approach the IDRS is obtained by scaling the EDRS (with viscous damping ratio ξ=5 per cent) by means a ductility reduction factor R_μ. In particular, the inelastic pseudo-acceleration S_a and displacement S_d - which represents the coordinates of the IDRS in ADRS format - are characterized from the coordinates [S_{de};S_{ae}] of the EDRS (ξ=5 per cent) as follows:

$$S_a = \frac{S_{ae}}{R_\mu} \qquad S_d = \frac{\mu \cdot S_{de}}{R_\mu} \qquad S_{de} = \frac{S_{ae} \cdot T^2}{4\pi^2} \qquad S_d = \frac{\mu \cdot S_a \cdot T^2}{4\pi^2} \tag{8}$$

A great number of reduction rules are available in literature. Usually the reduction factor R_μ is an explicit function both of structural period and of characteristic periods of the earthquake. In this paper a reduction factor depending only on velocity and displacement elastic spectra was adopted. Starting from the reduction rule proposed by Ordaz *et al.*[12] the following expression of the strength reduction factor was proposed:

$$R_\mu = 1 + \left(\frac{S_v(T)}{PGV}\right)^{\alpha(\mu)} \left(\frac{S_d(T)}{PGD}\right)^{\beta(\mu)} \tag{9}$$

where PGV is the peak ground velocity; PGD is the peak ground displacement; $S_d(T)$ is the elastic spectral displacement; $S_v(T)$ is the elastic spectral velocity; $\alpha(\mu)$ and $\beta(\mu)$ are functions which have to be obtained with a statistical data analysis. In particular, for each ductility factor μ, the values of α and β were found that minimized the root-mean-square logarithmic error σ, defined as:

$$\sigma^2 = \frac{1}{N} \cdot \frac{1}{M} \cdot \sum_{i=1}^{N} \sum_{j=1}^{M} \left[\ln\left(\frac{R_{ij}(T_i)}{R^*_{ij}(T_i)} \right) \right]^2 \tag{10}$$

where N is the number of recordings and M is the number of structural periods considered in the analysis. For each ductility factor μ and for each period T_j the "real" reduction factor R_{ij} is defined from the EDRS(T_j) and the IDRS(T_j,μ) of the recording i. It can be observed that the IDRS are not very sensitive to moderate variation of the strain-hardening ratio. As a consequence, they are obtained with a simple elastoplastic modelling of the SDOF equivalent system. The computed reduction factor R^*_{ij} is obtained applying eq.9 for recording i and structural period T_j. The analysis was carried out on a group of 30 historical registrations from the European earthquake database. The seismic inputs were chosen to be consistent to Eurocode 8 type 1 elastic response spectrum for firm soil (class A). The selection was carried out minimizing the mean square error of the spectral acceleration response. In Table 1 the parameters of the earthquake registrations are reported. In particular, t_{REG} represents the registration length, TP is the total power defined from the amplitude Fourier spectrum. Periods ranging in [0.01s; 2s] with step 0.01s and ductility factors μ=2,3,4,5,6,7,8 were considered in the analysis. In Table 2 the values of α and β minimizing the error function σ are shown. A regression model was used to characterize the variation of these parameters with the displacement ductility factor μ (Fig.3). A good fitting with very high values of the correlation parameter R is given by the following functions:

$$\alpha(\mu) = -0.1967 \cdot \log(\mu) + 0.454 \qquad \beta(\mu) = 0.2314 \cdot \log(\mu) - 0.0071 \tag{11}$$

Table 1. Parameters of the earthquake ground motions

Input	Data	Time	Direction	PGA /g	t_{REG}	TP/PGA^2
Bevagna	26/09/97	0.33.16	NS	0.0342	46.11	5.942
Bevagna	26/09/97	9.40.30	NS	0.0756	50.31	4.350
Bevagna	26/09/97	9.40.30	EW	0.0787	50.31	5.836
Bevagna Valnerina	19/09/79	21.35.37	NS	0.0393	23.81	1.796
Bevagna Valnerina	19/09/79	21.35.37	EW	0.0235	23.81	3.878
Bolu-Bayindirlik	12/11/99	16.57.20	NS	0.7455	55.87	1.070
Bolu-Bayindirlik	12/11/99	16.57.20	EW	0.8005	55.87	0.590
Codroipo	06/05/76	20.00.13	EW	0.0877	41.32	3.176
Colfiorito	03/09/97	22.07.29	NS	0.1240	12.80	1.047
Colfiorito	03/09/97	22.07.29	EW	0.0636	12.80	0.968
Colfiorito	26/09/97	9.40.30	NS	0.1781	48.32	2.683
Colfiorito	26/09/97	9.40.30	EW	0.3298	48.32	1.064
Gebze-Tubitak	17/08/99	0.01.40	NS	0.2380	47.63	1.566
Gebze-Tubitak	17/08/99	0.01.40	EW	0.1355	47.63	2.796
Gubbio Piana	26/09/97	9.40.30	NS	0.0986	106.03	3.594
Kalamata Ote Building	13/09/86	17.24.31	NS	0.2400	29.86	1.554
Kalamata Ote Building	13/09/86	17.24.31	EW	0.2723	29.86	1.683
Lefkada Hospital	17/01/83	12.41.30	NS	0.0654	37.98	3.349
Mercato San Severino	23/11/80	18.34.52	NS	0.1079	72.31	4.535
Mercato San Severino	23/11/80	18.34.52	EW	0.1389	72.31	5.957
Petrovac Hotel Oliva	15/04/79	6.19.41	NS	0.4541	48.22	4.121
Petrovac Hotel Oliva	15/04/79	6.19.41	EW	0.3059	48.22	3.875
Rionero in Vulture	23/11/80	18.34.52	EW	0.0994	83.94	8.584
Sakarya-Bayindirlik	12/11/99	16.57.20	NS	0.0154	117.12	4.816
Sakarya-Bayindirlik	12/11/99	16.57.20	EW	0.0231	117.12	4.743
Sturno	23/11/80	18.34.52	EW	0.3229	71.93	2.202
Thessaloniky City	20/06/78	20.03.21	NS	0.1392	30.59	1.583
Tolmezzo Diga	06/05/76	20.00.13	NS	0.3568	36.53	1.004
Tolmezzo Diga	06/05/76	20.00.13	EW	0.3158	36.41	1.924
Simulated 1 (SIM 1)	-	-	-	0.5000	40.00	11.10
Simulated 2 (SIM 2)	-	-	-	0.5000	35.00	9.140

Table 2. Values of α and β minimizing the error σ

	$\mu = 2$	$\mu = 3$	$\mu = 4$	$\mu = 5$	$\mu = 6$	$\mu = 7$	$\mu = 8$
α	0.3168	0.2407	0.1840	0.1300	0.1012	0.0707	0.0481
β	0.1472	0.2507	0.3212	0.3649	0.4974	0.4430	0.4698
σ	0.0456	0.0694	0.0742	0.0883	0.1041	0.1158	0.1258

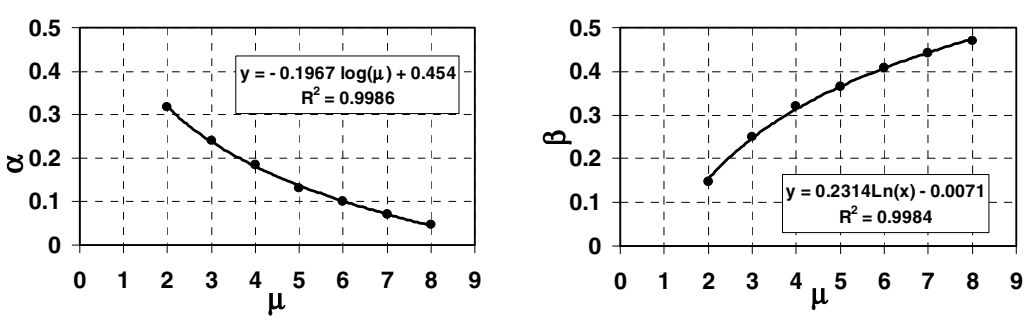

Figure 3. Variation of α and β with the ductility factor μ

Improved Capacity Spectrum Method (ICSM)

The calculation of the PP is realized with an iterative graphic procedure which uses the Capacity Spectrum Method based on inelastic demand Spectra. The procedure starts with the comparison between the BCS and the EDRS with damping ratio ξ=5 per cent. The intersection of the radial line corresponding to the elastic stiffness of the equivalent bilinear system and the EDRS defines the strength required for elastic behaviour of the structure. If the EDRS intersects the BCS over the yielding point this means that the structure behaves inelastically under the earthquake ground motion. In this case, eq.(8) gives the coordinates $[S_a;S_d]$ of the IDRS from the coordinates $[S_{de};S_{ae}]$ of the EDRS. The reduction factor R_μ is a function of the displacement ductility factor μ, and so the IDRS depends on the performance point PP which is unknown. Furthermore, the CS is modelled with a bilinear representation, and so the post-elastic acceleration S_a is greater than the yielding acceleration S_{ay}, and it depends from the PP. As a consequence, an iterative procedure has to be applied to estimate the intersection between the IDRS and the BCS. In particular, this sequence of steps has to be performed:

1) Run the pushover analysis of the building;
2) Plot the CC of the structure in terms of base shear V and roof displacement δ_{TOP};
3) Characterize the equivalent SDOF system and plot the CS in ADRS format;
4) Define the BCS corresponding to the maximum displacement of the pushover analysis;
5) Plot the EDRS (with ξ=5 per cent);
6) Intersect the radial line corresponding to the elastic stiffness and the EDRS to obtain the deformation demand $S_d^{(i)}$ and the displacement ductility demand $\mu^{(i)}= S_d^{(i)}/ S_{dy}$;
7) Compute the post-elastic stiffness $K_{pe}^{(i)}$ of the $BCS^{(i)}$;
8) Compute the reduction factor $R_\mu^{(i)}$ from eq.9;
9) Plot the $IDRS^{(i)}$ using eq.8;
10) Intersect the $IDRS^{(i)}$ and the $BCS^{(i)}$ to estimate the new deformation demand $S_d^{(j)}$ and the displacement ductility demand $\mu^{(j)}= S_d^{(j)}/ S_{dy}$;
11) Check for convergence. If $|S_d^{(i)}- S_d^{(j)}|/ S_d^{(j)}$<tolerance (=0.05) then the earthquake deformation demand (target displacement) is $S_d= S_d^{(j)}$. Otherwise repeat steps 4-10 with $S_d^{(i)}= S_d^{(j)}$;
12) Starting from the displacement S_d=d of the SDOF equivalent system, compute the lateral displacement vector of the building given by: $\boldsymbol{\delta} = \Gamma_1 \cdot \boldsymbol{\phi}_1 \cdot d = \boldsymbol{PF_1} \cdot d$.

Estimation of seismic damage

The seismic demand is usually represented by inelastic strength and displacement spectra, and not in terms of hysteretic energy spectra. Furthermore, the nonlinear static procedures usually gives an estimation of the earthquake-induced deformation, while neglect the effects of cumulative damage and hysteretic energy dissipation. However, the deformation alone may be not sufficient for the evaluation of the cumulative damage, which is considered to be especially important for existing structures which have frequently not to be detailed for sustained resistance through many cycles of response into the inelastic range. In order to be used for earthquake-resistant design of the structures both at the serviceability limit state and at the failure limit state an equivalent NSP should estimate not only the lateral displacements but also the structural damage. In this paper an analysis procedure for the estimation of the structural and non-structural damage starting from the results of the ICSM is proposed. The non-structural damage is evaluated with two indices available in literature [13-14]. In particular, the damage index $D_{I,i}$ in walls, partitions, floors and fixtures of the ith floor is computed as a function of the interstorey drift ratio Δ_i/h_i, as follows:

$$D_{I,i} = 0 \; for \; \frac{\Delta_i}{h_i} \le \frac{1}{500} \qquad D_{I,i} = \frac{5}{4} \cdot \left(\frac{\Delta_i}{h_i} - \frac{1}{500} \right) \; for \; \frac{1}{500} \le \frac{\Delta_i}{h_i} \le \frac{1}{100} \qquad D_{I,i} = 1 \; for \; \frac{\Delta_i}{h_i} \ge \frac{1}{100} \quad (12)$$

The damage index $D_{T,i}$ in fittings and apparatuses is calculated as a function of the lateral displacements δ_i and the height H of the building, as follows:

$$D_{T,i}=0 \ for \ \frac{\delta_i}{H}\le\frac{7}{5000} \quad D_{T,i}=\frac{5000}{13}\cdot\left(\frac{\delta_i}{H}-\frac{7}{5000}\right) \ for \ \frac{7}{5000}\le\frac{\delta_i}{H}\le\frac{1}{250} \quad D_{T,i}=1 \ for \ \frac{\delta_i}{H}\le\frac{1}{250} \tag{13}$$

The global damage indices D_I and D_T, are estimated applying a weighting factor η_i which reflects the importance of elements with a higher damage index, as follows:

$$D_I=\sum_{i=1}^{N}\eta_i\cdot D_{I,i} \qquad D_T=\sum_{i=1}^{N}\eta_i\cdot D_{T,i} \qquad \text{where} \qquad \eta_i=D_i\Big/\sum_{i=1}^{N}D_i \tag{14}$$

The global damage index D_{NS} in non-structural elements is given by:

$$D_{NS}=r_I\cdot D_I+r_T\cdot D_T \tag{15}$$

where r_I=0.75 and r_T=0.25 are weighting factors which reflects the relative importance of D_I and D_T in the overall non-structural damage.

The damage in the structural members is computed using as damage parameters the curvatures θ_i^+ for positive bending moment and θ_i^- for negative bending moment. In this paper the Park & Ang damage model [15] is modified to use the displacement ductility factor demand and the hysteretic energy ductility factor demand both for positive bending moment (μ_s^+, μ_e^+) and negative (μ_s^-, μ_e^-) bending moment. In this way for the ith fiber plastic element two local damage indices are defined:

$$D_{PA,i}^{(+/-)}=\frac{1}{\mu_{u\ mon,i}^{(+/-)}}\left(\mu_{s,i}^{(+/-)}+\frac{\beta_i^{(+/-)}}{M_{y,i}^{(+/-)}\theta_{y,i}^{(+/-)}}\int dE_i^{\theta^{(+/-)}}\right)=\frac{1}{\mu_{u\ mon,i}^{(+/-)}}\left[\mu_{s,i}^{(+/-)}+\beta_i^{(+/-)}\left(\mu_{e,i}^{(+/-)}-1\right)\right] \tag{16}$$

where $\mu_{s,i}$ and $\mu_{u\ mon,i}$ are, respectively, the ductility factor demand and ductility factor capacity; $M_{y,i}^+$ e $M_{y,i}^-$ are the yielding bending moments; $dE_i^{\theta+}$ and $dE_i^{\theta-}$ are the incremental values of the hysteretic energy; β_i^+ and β_i^- are parameters accounting for the effect of cyclic loading on structural damage. These parameters are characterized with an extension of the Park & Ang relationship obtained from the minimum variance condition between experimental and theoretical values:

$$\beta_i^{(+/-)}=\left(-0.447+0.073\cdot l_i^{(+/-)}\Big/d_i^{(+/-)}+0.24\cdot\nu_i^{(+/-)}+0.314\cdot\rho_{cc,i}^{+}\right)\cdot 0.7^{\rho_{s,i}}\int dE_i\Big/\int dE_i^{\theta(+/-)} \tag{17}$$

where $\rho_{cc,i}$ is the longitudinal steel ratio, $\rho_{s,i}$ is the confinement ratio, l_i/d_i and ν_i are the shear span ratio and the normalised axial stress. In the case of symmetric steel areas under cyclic monotonic loading $D_{PA,i}^+=D_{PA,i}^-=D_{PA}$. In the other cases $D_{PA,i}=\max(D_{PA,i}^+;D_{PA,i}^-)$. The locale damage indices $D_{PA,i}$ are combined in a weighted mean to give the following global damage index:

$$D_{PA}=\sum_{i=1}^{Np}\left(\eta_i\cdot w_i\cdot D_{PA,i}\right) \tag{18}$$

where the weighting factor η_i depend on the magnitude of the damage index for each fiber element, while w_i is a weight which reflect the importance of the structural member in maintaining the integrity of the structure. Such weight is assumed to be linear decreasing with the height and ranging in [0.5;1]. These hypotheses lead to the following expressions:

$$w_i=\frac{r_i\cdot\sum_{j=1}^{Np}D_{PA,j}}{\sum_{k=1}^{Np}\left(D_{PA,k}\cdot r_k\right)} \qquad \text{where} \qquad r_i=\left[1-\frac{1}{10}\cdot\left(\frac{h_i}{h}-1\right)\right] \tag{19}$$

where h_i is the height of structural member relative to the ground. The use of the curvatures deriving from the pushover analysis to evaluate the damage index may be not conservative. In fact, cumulative damage due to the hysteretic dissipation would be neglected. In this paper an approximate method to estimate the

structural damage is proposed. The hysteretic energy ductility factor $\mu_{e,i}$ is defined beginning from the displacement ductility factor $\mu_{s,i}$ as follows:

$$\mu_{e,i} = 1 + \mu_{s,i}^2 \cdot \gamma_{corr,i}^2 \quad \text{with} \quad \gamma_{corr,i} = \gamma_i \cdot \sqrt{\frac{E_{MP}}{E_{SP} \cdot \Gamma_1^2}} \cdot \sqrt{\frac{E_{SD}}{E_{SP}}} \quad \text{and} \quad \gamma_i = \frac{1}{\mu_{s,i}} \sqrt{\frac{E_{h,i}}{M_{y,i} \cdot \theta_{y,i}}} \tag{20}$$

In eq.20 γ_i is a normalised hysteretic energy parameter; E_{MP} is the energy dissipation of the MDOF system under pushover loading up to the target displacement at the height H_{eq}; E_{SP} is the energy dissipation of the SDOF system corresponding to the PP; E_{SD} represents the hysteretic energy dissipation of the SDOF system (with ξ=5 per cent) valued through the nonlinear response history analysis under the earthquake ground motion. In eq.20 the normalized hysteretic factor γ_i is corrected through two coefficients. The first one accounts for the relationship between plastic energy dissipated from the MDOF system and the energy dissipated from the equivalent SDOF system during the pushover analysis. The second accounts for the relationship between the hysteretic energy dissipation under seismic loading and the monotonic energy dissipation of the equivalent SDOF system. The seismic damage is finally estimated using eq.16 which combines the displacement ductility factor $\mu_{s,i}$ deriving from the pushover analysis and the equivalent hysteretic energy ductility factor $\mu_{e,i}$ given by eq.20. The degradation parameter β_i defined by eq.17 accounts for the bending moment diagram and the effects of the variation of axial load in columns. The method is based on this sequence of steps:

1) Compute the performance point with the improved Capacity Spectrum Method (ICSM);
2) Run the nonlinear pushover analysis until the target displacement at the height H_{eq} is attained;
3) Calculate the displacement ductility factors $\mu_{s,i}^+$ and $\mu_{s,i}^-$ for each fiber element;
4) Compute the normalised hysteretic energy factor γ_i ;
5) Run the nonlinear dynamic analysis of the equivalent bilinear system and calculate the energy dissipation E_{SD};
6) Calculate the normalised hysteretic energy factor $\gamma_{corr,i}$ and the hysteretic energy ductility factors $\mu_{e,i}^+$ and $\mu_{e,i}^-$ with eq.20;
7) Compute the degradation parameter β_i from eq.17 for each fiber plastic element;
8) Calculate the local damage index from eq.16 and the global damage index from eq.18.

COMPARATIVE EVALUATION

Comparative evaluation of the ductility reduction factor

In this paper the ductility reduction factor was obtained with eq.9, and so it depends on the velocity and displacement elastic spectra. The results obtained were compared with other reduction rules proposed in literature which generally requires the estimation of the characteristic periods of the earthquake. In particular, the first and widely used reduction rule was proposed by Newmark and Hall [16] and is based on energy equivalence in low period range and on displacement equivalence in medium-high period. Riddel *et al.*[17] presented an expression calibrated on systems with elastoplastic behaviour subjected to four different groups of seismic events. Nassar *et al.*[18] calibrated the reduction rule on degrading stiffness bilinear systems, and showed that the R_μ factor is independent from epicentral distance, and slightly sensitive to the type of hysteretic model. Miranda [19] formulated a reduction rule dependent on the site condition and based on bilinear systems analysis (strain-hardening ratio α=3 per cent and ductility $\mu \leq 6$). Vidic *et al.* [20] proposed an expression for reduction factor based on 'equal displacement rule' in medium-high period range and derived from statistical study on stiffness-degrading bilinear hysteretic systems with 10 per cent strain hardening and 5 per cent mass proportional damping. Cosenza *et al.* [21] proposed an expression of R_μ independent by soil characteristics and based on statistical studies of seismic Italian events. Ordaz *et al.*[12] carried a statistical study on a sample of 445 earthquake ground motions providing the following expression:

$$R_\mu = 1 + \left(S_D(T)/PGD\right)^{\beta(\mu)} \qquad \text{with} \qquad \beta(\mu) = 0.388\left(\mu - 1\right)^{0.173} \tag{21}$$

In Table 3 the comparison of the different reduction rules is shown. The comparative evaluation is carried out in terms of square-mean-root of logarithmic error σ. As shown, for each ductility value the proposed reduction rule provides the minimum error.

Table 3. Square-mean-root logarithmic error σ for different reduction rules

Reduction Rule	μ = 2	μ = 3	μ = 4	μ = 5	μ = 6	μ = 7	μ = 8
Newmark-Hall	0.0683	0.1035	0.1128	0.1268	0.1464	0.1607	0.1726
Riddel-Hidalgo-Cruz	0.0716	0.1102	0.1234	0.1416	0.1665	0.1858	0.2029
Krawinkler-Nassar	0.0680	0.1033	0.1248	0.2026	0.2347	0.2618	0.2863
Miranda	0.0660	0.0978	0.1064	0.1229	0.1464	0.1660	0.1826
Vidic-Fajfar-Fischinger	0.0630	0.0994	0.1117	0.1297	0.1534	0.1761	0.2172
Cosenza-Manfredi	0.0713	0.1041	0.1132	0.1312	0.1431	0.1698	0.1837
Ordaz-Pèrez Rocha	0.0589	0.0776	0.0781	0.0911	0.1083	0.1216	0.1349
Proposed Reduction Rule	0.0456	0.0693	0.0742	0.0883	0.1041	0.1158	0.1258

Description and modelling of the buildings

In order to evaluate the possibility to use the approximate method to give an estimation of the structural and non-structural damage indices two 6-storey RC framed buildings are considered (fig.4). Each building is regular in plan and in elevation and it was designed and detailed in accordance with Eurocodes 8 [1] for the High Ductility Class and the design ground acceleration 0.35 *g*. It is assumed that: a) the interstorey height is h=3.0m; b) at each storey all the columns have the same cross-section b_Cxh_C; c) all the beams have the same cross-section b_Bxh_B; d) $b_C=b_B=b$; e) the columns are tapered every two plans with taper ratio $r=\Delta h_C/h_C$=0.10; f) the beam span is L_B=5.0 m. In such hypothesis the geometric characteristics of the building can be related to three independent parameters: 1) the fundamental period T_1; 2) the ratio $\rho_T=T_X/T_Y$ between the first period in the X direction and the first period in the Y direction, this parameters is a function of the ratio $\beta_C=I_{CY}/I_{CX}$ between the moments of inertia of the column; 3) the parameter $\rho=\max(\rho_X;\rho_Y)$, where $\rho_X=I_{CX}/I_B$ and $\rho_Y=I_{CY}/I_B$ are the moment of inertia ratios between columns and beams. In particular, the fundamental period T_1 may be written as follows:

$$T_1 = \frac{2\pi}{\Omega_1}\sqrt{\frac{12 \cdot L_B^3}{E \cdot \alpha_B^3}} \cdot \frac{1}{b^2} \tag{22}$$

where $\alpha_B=h_B/b_B$ and Ω_1 is the fundamental circular frequency of a structure with the same mass and the stiffness divided for EI_B / L_B^3.

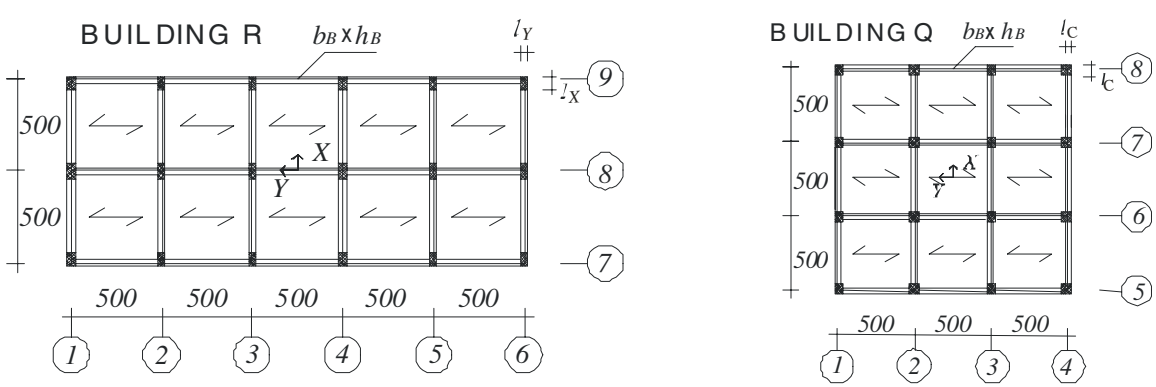

Figure 4: Plan of the buildings

Eq.(22) gives the relationship between the fundamental period T_1=0.60s and the cross section parameter b, which is the starting point for the calculation of the geometric characteristics of the building. The structural damping was characterized with Rayleigh proportional damping model. The damping coefficients α and β are defined assigning modal damping ratios ξ=5 per cent to the fundamental mode shapes in the X and Y directions. As far as the material properties, steel of class S500 and concrete C25/30 were used. The nonlinear dynamic analysis was carried out neglecting gap and pullout, and considering an unloading factor of stiffness degradation equal to 0.5.

Comparative evaluation of the Improved Capacity Spectrum Method

The ICSM was applied to estimate the nonlinear response of the building Q and the building R under seismic inputs selected from the aforementioned earthquake ground motions and revised to have PGA=0.50*g*. In fig.5 the Capacity Spectrum and Inelastic Demand Response Spectrum corresponding to the convergence of the iteration procedure are shown. For some seismic inputs (Sakarya, Sturno, Thessaloniky) the intersection between CS and IDRS occurs with the branches of the two spectra nearly parallel. In this case, the iterative procedure for the estimation of PP can suffer problems concerning both convergence and accuracy. The effectiveness of the method improves if the bilinear representation of the CS is replaced by an elastoplastic modelling. Furthermore, this hypothesis is quite conservative for the evaluation of maximum lateral displacement. The ICSM was then compared with others nonlinear static procedures, such as the procedures ATC (A,B,C), the Displacement Coefficient Method of FEMA 273-274, the procedure of the Eurocode 8, the CSM-N2 method proposed by Fajfar. The obtained results are compared with the "exact" nonlinear response deriving from the Nonlinear Response History Analysis (NRHA) of the building. In Table 4 the percentage error in estimation of roof displacement is shown. Generally, the ICSM gives results more accurate than other methods proposed in literature. In fact, the ICSM does not overestimate the inelastic response as occurs in methods based on the amplification of the elastic spectral displacement of the equivalent SDOF system (FEMA 273, EC8), or in methods with an elastoplastic modelling of the capacity spectrum (CSM-N2). On the other side, the ATC-40 procedures can give a less conservative estimation of the maximum displacement. However, as a consequence of the bilinear representation they use (with PP depending yielding point, elastic stiffness and post-elastic stiffness) the convergence of iterative process is not ensured. Moreover, the ATC-40 procedures require the calculation of earthquake spectrum characteristic periods which often are not easy to be estimated.

Table 4. Percentage error in estimation of roof displacement

N.	Building	Input	ATC-A	ATC-B	ATC-C	FEMA	EC8	CSM-N2	ICSM
1	Q	Bevagna NS	No sol.	+14.3	+29.9	+17.2	+6.70	+0.19	-2.67
2	Q	Bolu EW	+41.7	+41.2	+30.2	+88.4	+87.0	+66.3	-3.95
3	Q	Gebze-Tubitak EW	+6.90	+5.71	+22.1	+49.1	+40.1	+45.9	+17.7
4	Q	Gubbio-Piana NS	-1.50	-6.68	+19.2	+45.2	+25.6	+24.3	+1.57
5	Q	Kalamata EW	-11.6	-16.6	+13.9	+57.5	+14.7	+31.9	+18.8
6	Q	Lefkada NS	+7.38	+8.07	+3.63	+31.5	+34.2	+16.6	-5.33
7	Q	Petrovac NS	-4.07	-10.7	-19.9	+31.3	+7.95	+10.2	+12.1
8	Q	Sakarya EW	-12.0	-16.5	-17.4	+42.4	+1.78	+22.3	+7.42
9	Q	Sturno EW	-12.8	-14.3	+2.19	+39.9	+24.8	+5.19	-7.51
10	Q	Thessaloniki NS	+12.4	+16.7	+4.39	+41.6	+44.2	+25.0	-18.0
11	R	Sim 1	+3.12	+1.43	+4.96	+1.23	+35.3	+22.2	-2.20
12	R	Sim 2	+27.9	+27.7	+33.9	+31.4	+53.2	+47.5	+12.4
13	R	Tolmezzo EW	-19.3	-27.1	-26.7	+98.7	+14.9	+16.7	+12.8
14	R	Petrovac NS	+3.46	-2.02	-18.4	+95.9	+39.0	+16.1	-2.26
15	R	Bevagna NS	+24.0	No.sol.	+18.8	+24.7	+24.4	+20.0	+6.67

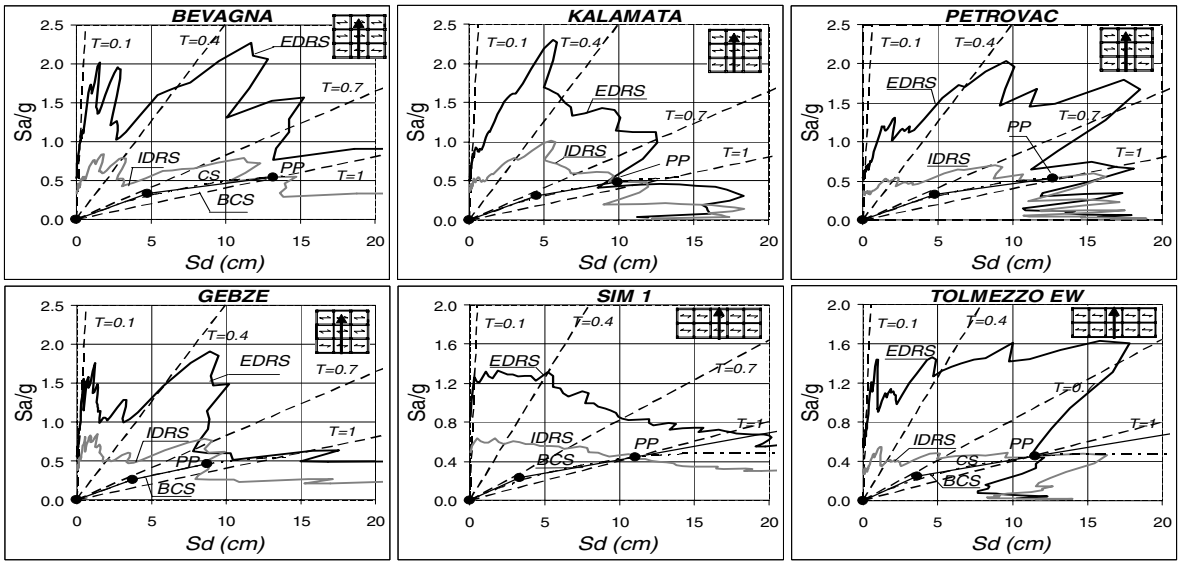

Figure 5. Improved Capacity Spectrum Method: Calculation of Performance Point

Comparative evaluation of the seismic damage

The calculation of the lateral displacement with the ICSM is the starting point for the estimation of seismic damage both in structural members and in non-structural parts of the building. In Fig.6 the values of the non-structural damage index D_{NS} at each floor are plotted. In particular, the comparison between the results obtained with the NRHA and the ICSM is carried out. When the estimation of the PP is accurate, the proposed method gives a good approximation of the non-structural damage.

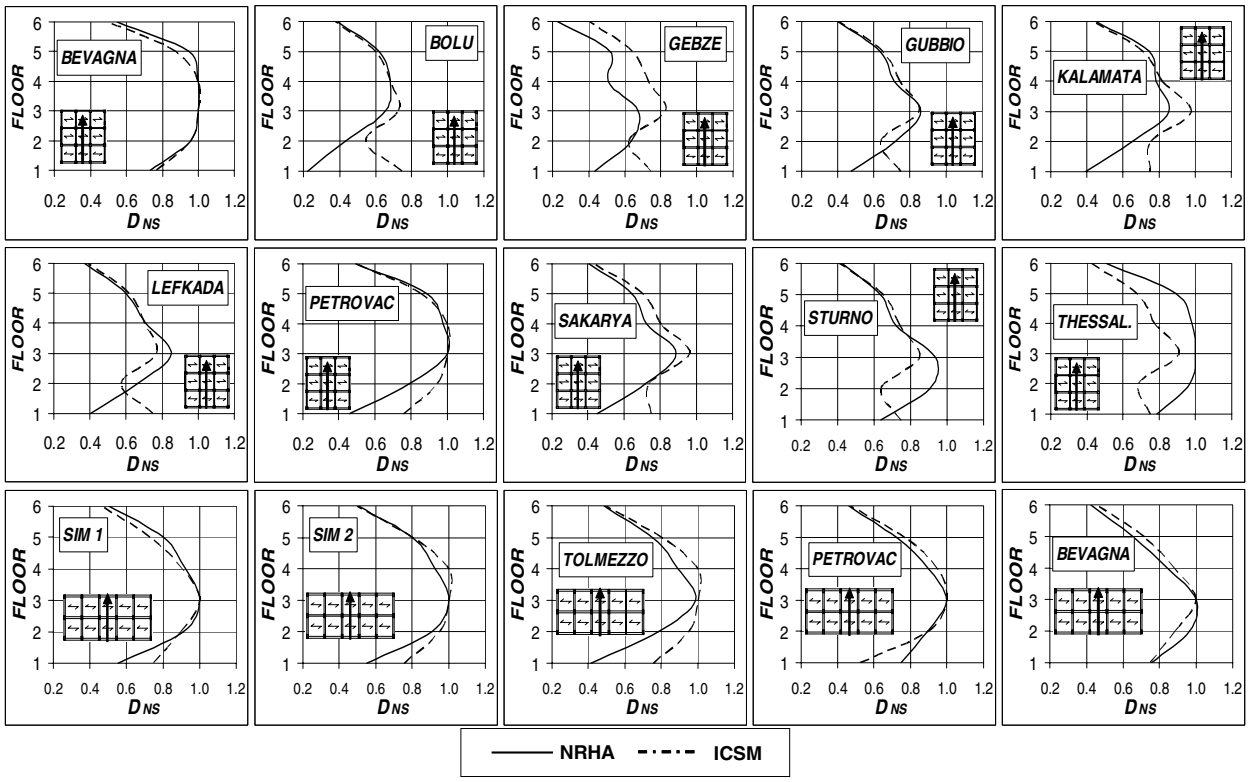

Figure 6: Non-structural damage index: Comparison between NRHA and ICSM

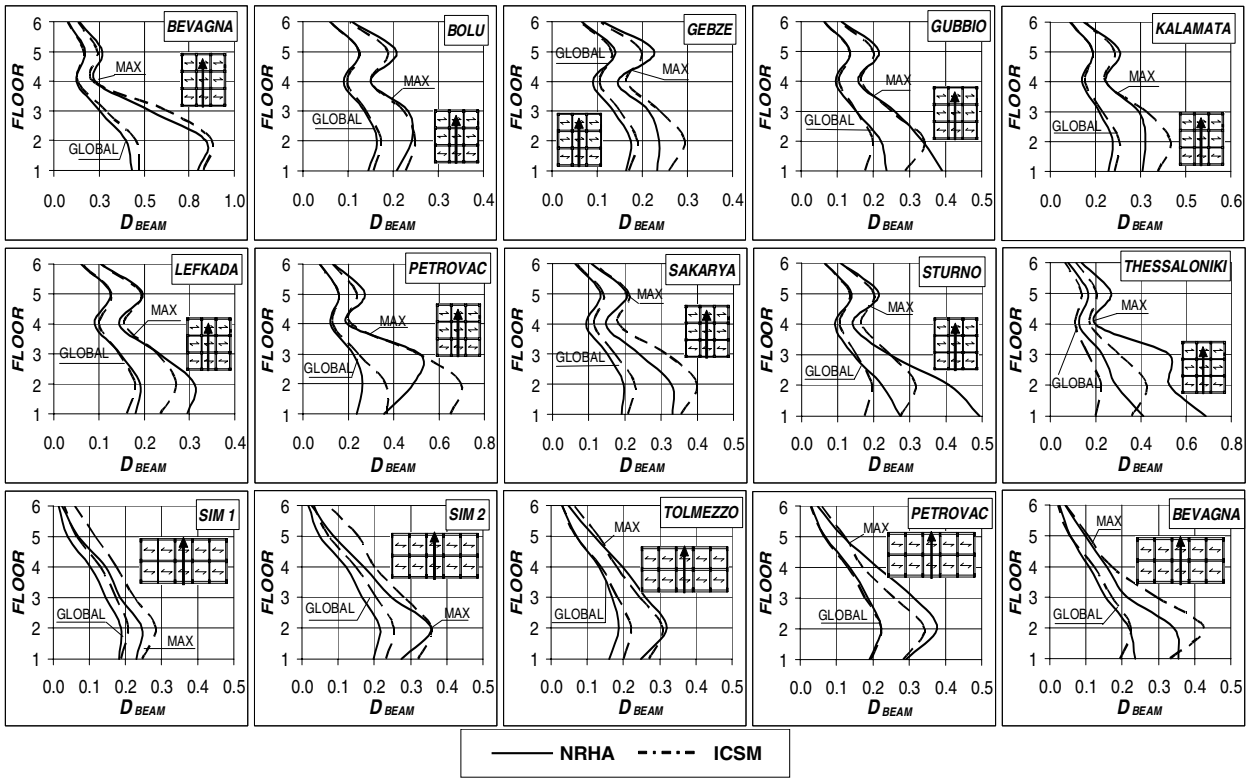

Figure 7: Seismic damage in beams: Comparison between NRHA and ICSM

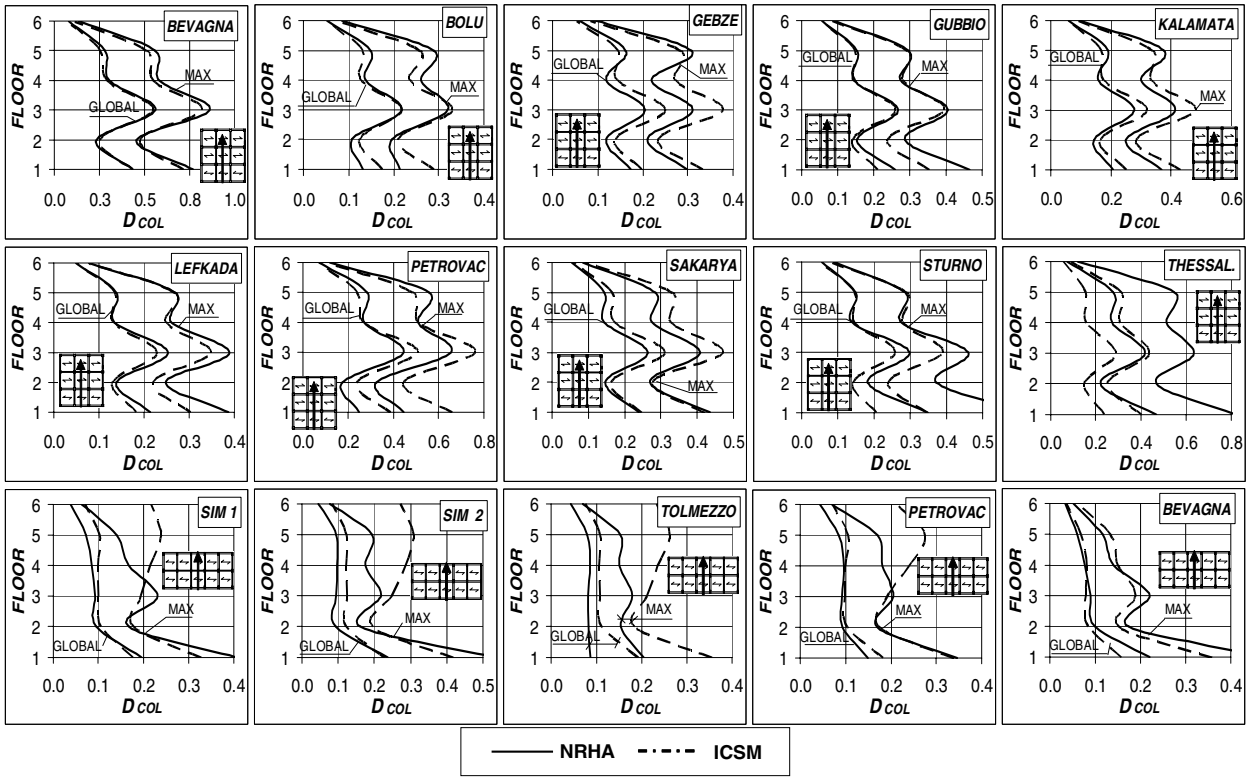

Figure 8: Seismic damage in columns: Comparison between NRHA and ICSM

For the Building Q the maximum differences between the NRHA and the ICSM occur at the first floor. In such case the ICSM overestimates the maximum interstorey drifts and, therefore, it gives a damage index in non-structural members higher than the NRHA. On the contrary for the Building R the overestimation occurs at the upper floors. In Figures 7 and 8 the global damage indices in columns (D_{COL}) and beams (D_{BEAM}) are shown. The approximated values given by the ICSM are compared with the "exact" values deriving from the NRHA. In Fig.9 the distribution of the modified Park & Ang damage index defined by eq.16 is reported. Such index makes possible to represent – separately - the levels of damage at the upper edge and at the lower edge of the beams, and on the two sides of the columns. The results do reference to an internal frame of the buildings. When the ICSM accurately estimates the PP, the simplified method is successful in reproducing the distribution of the damage index in the structural members even starting from the results of the static pushover analysis. The distribution of the seismic energy demand E_{SD} among the structural members is proportional to the energy dissipation under monotonic loading. However, a different dynamic amplification of the damage index is applied for each fiber plastic element because the degradation parameter β_i is a function of the longitudinal steel ratio, the confinement ratio, the shear span ratio and the normalised axial stress.

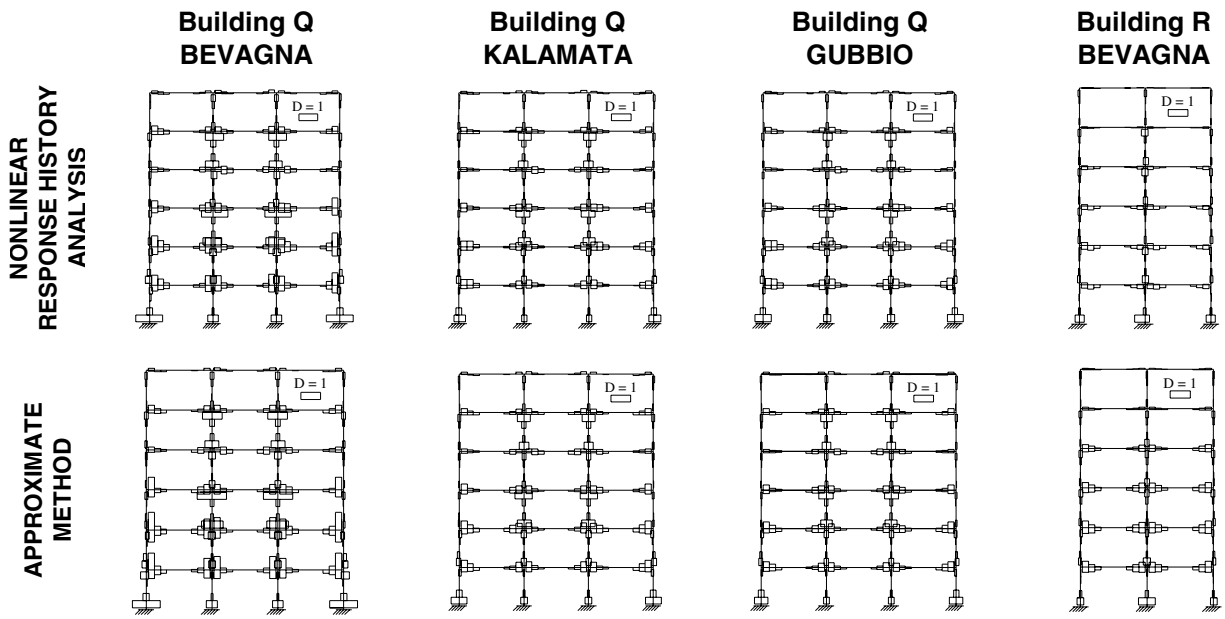

Figure 9: Distribution of the local damage index: Comparison between NRHA and ICSM

CONCLUSIONS

An approximate nonlinear static procedure for the estimation of the seismic damage of r.c. multistory buildings is presented. The inelastic demand spectra obtained with the reduction factor here proposed were compared with the inelastic spectra defined by other reduction rules available in literature. The proposed reduction rule gives the minimum root-mean-square logarithmic error for each displacement ductility factor. Furthermore, the estimation of characteristic periods of the earthquake, which often are difficult to evaluate, is avoided. An iterative procedure based on the capacity spectra method was used to calculate of the performance point. Some convergence and accuracy problems were found when the intersection between capacity spectrum and inelastic demand spectrum occurs with nearly parallel branches. In this case the effectiveness and conservativeness of the method can be improved replacing the bilinear representation of the capacity spectrum with an elastoplastic modelling. Compared with other nonlinear static procedures (ATC-40, FEMA 273-274, Eurocode 8, N2 method) the proposed procedure

generally gives a more accurate estimation of the maximum lateral displacements obtained from nonlinear response history analysis of the building. An extension of the Park & Ang damage model was used to define the damage index in structural members. For each fiber plastic element the energy ductility factor was characterized starting from the rotation ductility factor deriving from the static pushover analysis. At this aim, an amplification factor defined from the static and the seismic analysis of the bilinear equivalent SDOF system and from the pushover analysis of the building was proposed. The results obtained were compared with the damage index derived from the nonlinear response history analysis of the building. In the cases studied the simplified method seemed to be successful in reproducing the distribution of the damage index in the structural members.

REFERENCES

1. Eurocode 8, "Design of structures for earthquake resistance", Final PT Draft, prEN 1998-1, 2003.
2. FEMA, "NEHRP Guidelines for the seismic rehabilitation of buildings". 273-274, 1997.
3. ATC, "Seismic evaluation and retrofit of concrete buildings", Rep.ATC-40, Redwood City,3, 1996.
4. Fajfar P., "Capacity Spectrum Method based on Inelastic Demand Spectra", Earth. Eng. and Struct. Dyn., 28, 979-993, 1999.
5. Chopra A.K., Goel R.K. "A modal Pushover analysis procedure for estimating seismic demands for buildings", Earth.Eng. and Struct. Dyn., 2002, 561-582.
6. Valles R., Reinhorn A., Kunnath S. IDARC2D version 4.0: A Computer Program for the Inelastic Analysis of Buildings"m Technical Report NCEER-96-0010, NCEER, Buffalo, NY, 1996.
7. Freeman S.A., "The Capacity Spectrum Method as a Tool for Seismic Design", Proc. 11° European Conference on Earthquake Engineering, Paris, 1997.
8. Mander J.B., Priestley M., Park R., "Theoretical Stress-Strain Model for Confined Concrete", Journal of Structural Engineering, 114, ASCE,1804-1825, 1988.
9. Razvi S., Saatcioglu M., "Confinement Model for High-Strength Concrete", Journal of Structural Engineering, 125, ASCE, 1999.
10. Popovics S., "Numerical Approach to the Complete Stress-Strain Relation for Concrete.", Cement And Concrete Res., 3(5), 583-599, 1973.
11. Carrasquillo R.L., Nilson A.H., Slate F.O., "Properties of High-Strength Concrete Subjected to Short Term Load", Aci J., 78(3), 171-178, 1981.
12. Ordaz M., Pèrez-Rocha L.E., "Estimation of strength-reduction factors for elastoplastic systems: New approach", Earthquake Engineering and Structural Dynamics, 27, 889-901, 1998.
13. Galambos T.V., Ellingwood B., "Serviceability limit states: Deflection", Journal of Structural Engineering, 112(1), ASCE, 67-85, 1986.
14. Savino C., Terenzi G., Vignoli A., "Analisi della risposta dinamica e valutazione del danneggiamento di strutture isolate alla base", Ingegneria Sismica, 2, 21-37, 1997.
15. Park Y. J., Ang A. H.S., "Mechanistic seismic damage model for reinforced concrete", Journal of Structural Engineering, 111(4), ASCE, 722-739, 1985.
16. Newmark N.M., Hall W.J., "Seismic design criteria for nuclear reactor facilities", Building Practices for Disaster Mitigation Rep. No. 46, Nat. Bureau of Stand., 209-236, 1973.
17. Riddel R., Hidalgo O.P., Cruz E.F., "Response modification factors for earthquake resistant design of short period buildings", Earthquake Spectra, 5(3): 571-590, 1989.
18. Nassar A.A., Krawinkler H., „Seismic demands for SDOF and MDOF systems", Rep. No. 95, John A. Blume Ctr., Stanford University, Cal., 1991.
19. Miranda E., "Site-dependent strength reduction factors"J.Str.Eng.,ASCE,119(12),3503-3519, 1993.
20. Vidic T., Fajfar P., Fischinger M., "Consistent inelastic design spectra: strenght and displacement" Earth. Eng. and Struct. Dyn., 23:507-521, 1994.
21. Cosenza E., Manfredi G., "Indici e misure di danno nella progettazione sismica", CNR-GNDT, 2000.