13th World Conference on Earthquake Engineering
Vancouver, B.C., Canada
August 1–6, 2004
Paper No. 146

GRAVEL DRAIN MITIGATION OF EARTHQUAKE-INDUCED LATERAL FLOW OF SAND

Kazuya Yasuhara[1], Toshiyasu Unno[2], Hideo Komine[1], and Satoshi Murakami [1]

SUMMARY

Effects of gravel drains on mitigation of earthquake-induced lateral flow deformation of saturated Toyoura sand with a uniform grain size distribution (ρ_s = 2.64 Mg/m^3, D_{50} = 0.175, D_r = 50%) were investigated in 1 g laboratory model tests. Earthquake-induced dynamic loading was simulated using lateral impact loads generated by a pendulum type-hammer on the side of the testing equipment. During and after impact loading, measurements were made of excess pore pressures together with settlement and displacement using markers attached on the side of the apparatus and a high-speed video camera. Results showed that:
1) A gravel drain installed on an inclined slope of medium dense sand reduces excess pore pressure generation and subsequent lateral flow deformation and post-cyclic settlement.
2) If liquefaction occurs in sand deposits with gravel drains, lateral deformation and vertical settlement are reduced, but the effect is less marked than for non-liquefied sand deposits with gravel drains.

INTRODUCTION

Post-liquefaction lateral deformation sometimes engenders severe damage to structures such as bridges, earth embankments, and buildings (e.g., Hamada et al. 1992, 1996; Ishihara, 2000). Several methods can reduce such damage in sandy materials (Coastal Development Institute of Technology, 1993). Among them, gravel drain installation is a promising method (Seed and Booker, 1977; Tokimatsu and Yoshimi, 1980). However, the mechanism of damage reduction caused by lateral flow during and after earthquakes and a design procedure for successful and economical implementation of counter-measures have not been established. To elucidate that mechanism and design procedures, 1 g model laboratory tests simulating level and inclined grounds consisting of loose sand were conducted with and without gravel drains. Countermeasures can be implemented to:

i) completely prevent liquefaction;
ii) reduce liquefaction-induced lateral flow deformation even if liquefaction occurs;

[1] Department of Urban and Civil Eng., Ibaraki University, Hitachi, Ibaraki, 316-8511, Japan
[2] Department of Civil Eng., Graduate school of Tohoku University, Aoba-ku, Sendai, Japan

iii) reduce liquefaction-induced lateral flow deformation, avoid damage caused by complete collapse of structures, and easily maintain or recover their function even if liquefaction occurs.

Model tests were carried out to assess whether gravel drains meet the third criterion.

DESIGN CONCEPT – FROM PREVENTION TO MITIGATION OR REDUCTION

Regarding countermeasures against earthquake-triggered damage to infrastructure, as stated above, the philosophy should be changed from prevention to mitigation or reduction because no reliable methods exist for completely protecting or preventing damage from natural disasters. This philosophy has emerged in Japan after the Great Hanshin Earthquake of 1995.

In accordance with the concept of countermeasures against earthquake-induced lateral flow, an attempt was made at laboratory model experiments to examine the availability of a gravel drain method for reducing earthquake-induced lateral flow and for reducing potential sand liquefaction (Seed and Booker, 1977). A design manual for coastal structures (Tanaka and Kokusyo et al., 1984; Tanaka and Takano, 1987) which was founded on liquefiable deposits gives an example: the allowable or maximum magnitude of excess pore water pressure ratio (EPWPR), u/p'_c, generated during cyclic excitation by earthquakes, is designated as 0.25. Although this critical value was determined by aiming at almost complete protection from liquefaction, it can be increased up to a certain value beyond 0.25 if the concept of countermeasures were changed from complete protection to partial reduction. Similarly, we are allowed to use EPWPR beyond 0.25 when the same change of concept is adopted for countermeasures against earthquake-induced lateral flow. Post-cyclic undrained triaxial tests were carried out in the laboratory on medium dense Toyoura sand with D_r = 50% to clarify the critical value of EPWPR that allows reduction instead of protecting lateral flow (Yasuhara, 2003; Unno et al., 2003a,b,c). According to results obtained in the laboratory, post-cyclic stiffness starts to decrease drastically from around 0.8 of EPWPR and further. For that reason, we conclude that the critical value of EPWPR for reducing lateral flow can be as high as 0.8 instead of 0.25. If this value is taken into consideration in the design manual for countermeasures against earthquake-induced lateral flow in sand, it would lead to cost reduction in construction of infrastructure situated on liquefiable deposits.

DESIGN PROCEDURE

Along with a sand drain for accelerating consolidation for clay foundations, a gravel drain installed in sand deposits is governed by:

$$\frac{k_h}{\rho_w g m_v}\left(\frac{\partial^2 u}{\partial r^2}+\frac{1}{r}\frac{\partial u}{\partial r}\right)+\frac{k_v}{\rho_w g m_v}\frac{\partial^2 u}{\partial z^2}=\frac{\partial u}{\partial t}+\frac{\partial u_g}{\partial t}. \tag{1}$$

For a vertical drain only, Eq. (1) implies

$$\frac{k_h}{\rho_w g m_v}\left(\frac{\partial^2 u}{\partial r^2}+\frac{1}{r}\frac{\partial u}{\partial r}\right)=\frac{\partial u}{\partial t}+\frac{\partial u_g}{\partial N}\frac{\partial N}{\partial t}, \tag{2}$$

where u_g is earthquake-induced excess pore water pressure which is given as

$$\frac{u_g}{\sigma'_c}=\frac{2}{\pi}\sin^{-1}\left(\frac{N}{N_l}\right)^{1/2\alpha}, \tag{3}$$

where α is experimental constant depending on the testing condition and index properties of sand, and N and N_l are a certain number and the number of load cycles at liquefaction, respectively.

Figure 1 illustrates two methods for layout of a gravel drain, which is equivalent to that of sand drain. When we use the solution obtained by Seed and Booker (1977), drain distance d can be determined as a parameter of the effective sustaining time, t_d, of earthquake motion, depending on the allowable EPWPR if F_L and r_w are assumed. This study is an attempt to assume the magnitude of EPWPR for reducing lateral flow instead of protecting liquefaction, which has conventionally been adopted. As one example, Fig. 2 illustrates results of the case in which F_L and r_w are assumed to be 0.90 and 30 cm, respectively. According to results shown in Fig. 2, we are able to adopt the larger value of d when the allowable EPWPR is assumed to be 0.80 for reducing lateral deformation instead of assuming 0.25, which has conventionally been used for protecting liquefaction.

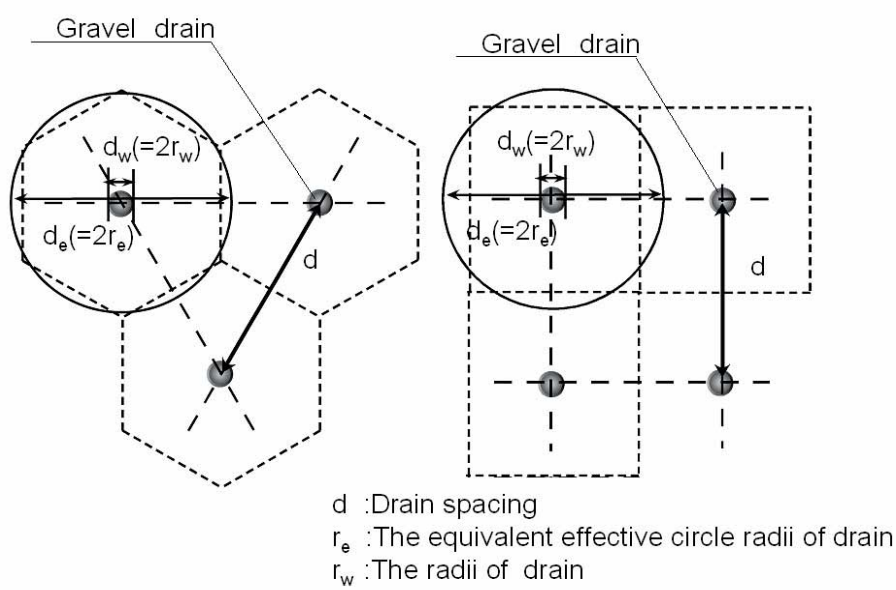

Fig. 1 Example of a gravel drain arrangement

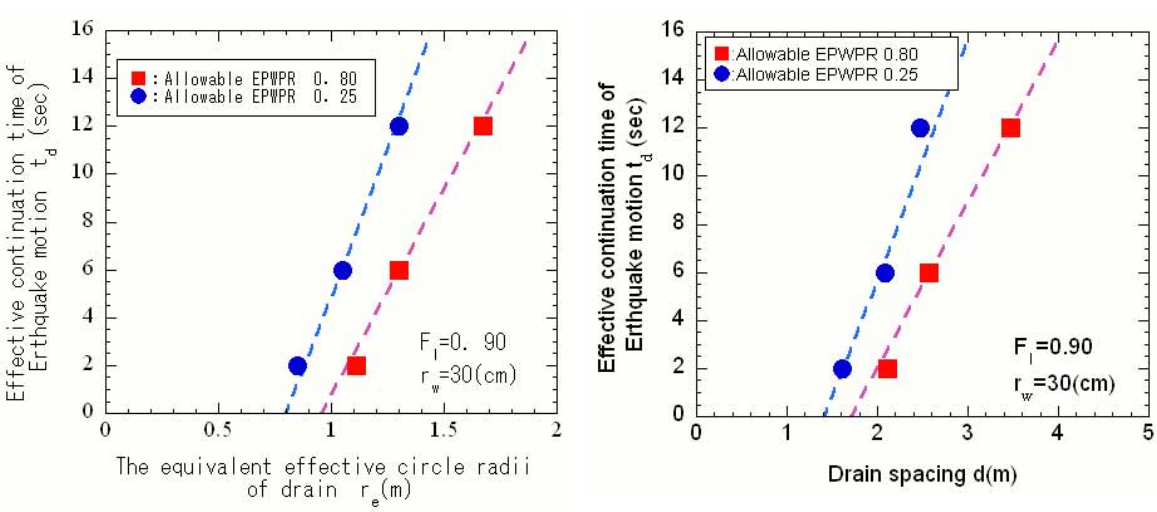

(a) Spacing of drain arrangement (b) Equivalent effective circle of drain

Fig. 2 Spacing of drain arrangement and equivalent effective circle of drain

OUTLINE OF TESTING APPARATUS AND TEST SCHEME

Model tests were conducted in a 100-cm long, 70-cm deep, 40-cm wide soil tank, as shown in Fig. 3. The frontal part is made of an acryl plate and the remaining portions of the soil tank are made from steel iron. The bottom part of the soil tank just above the floor and below the soil deposit, as shown in Fig. 3, is provided by 10-cm rectangular portions which are reinforced by thick iron to be acceptable for explosive loads that are produced by a falling wooden hammer contacting against the frontal part of soil tank, as shown in Fig. 4. Inclined liquefiable sand deposits are formed in the soil tank with an angle of inclination up to 10°. Before air-pluviating sand was deposited, the acryl spacer was placed initially on the soil tank floor to maintain the angle of inclination of sand deposits. The pore water pressure indicator was attached at six locations of the soil tank back face, as shown in Fig. 5. A 3-cm diameter, 20-cm high colored sand column was set among sand deposits at the locations shown in Fig. 6 to observe lateral deformation. On the other hand, vertical settlement was measured directly using the scale.

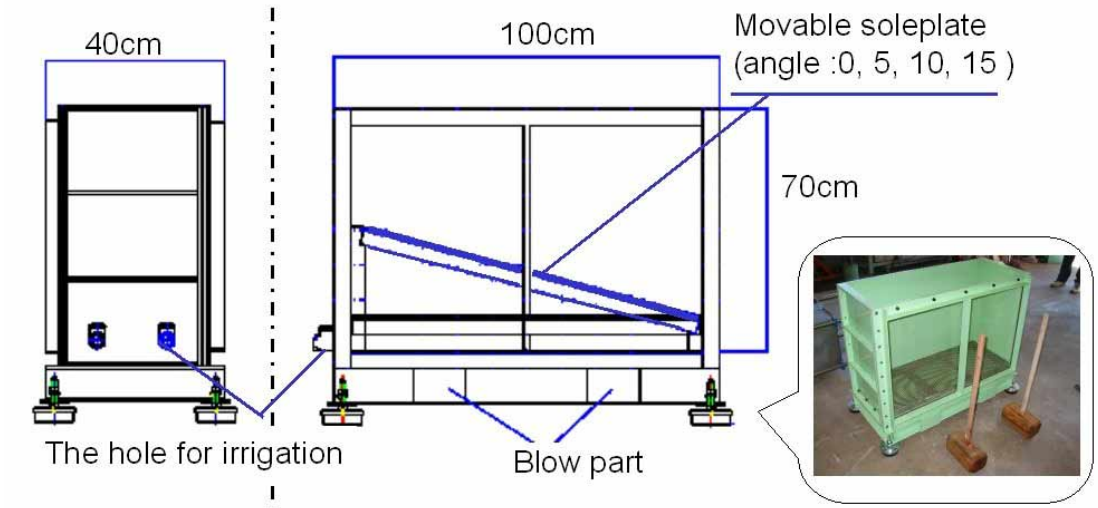

Fig. 3 Soil tank for model testing

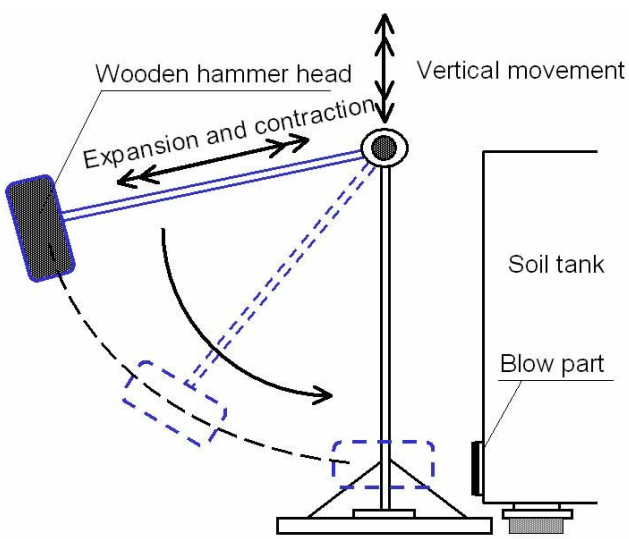

Fig. 4 Device for impact input

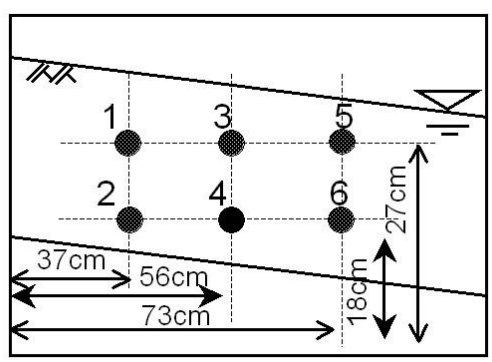

Fig. 5 Layout of the pore water pressure gauge

TESTING CONDITIONS

Sixteen kinds of model tests were carried out by changing the initial void ratio of sand, the inclination angle of model sand ground (5° and 10°), the intensity of impact loads, and the distance of gravel drain installed in sand (d = 9 cm and 20 cm). Excess pore water pressures (EPWP) were measures during and after liquefaction of inclined sand deposits. Variations of EPWP were measured among them from the instant of impact loading application until liquefaction occurs and subsequent flow deformation terminates. Definitions of both lateral deformation and vertical settlements measured are illustrated in Fig. 7.

Impact loads were applied using a pendulum type wooden hammer from a 65 cm height, as shown in Fig. 8. The impact energy in this case was calculated as 59.9 J. A typical example of variations of acceleration induced by impact loads with elapsed time is shown in Fig. 9.

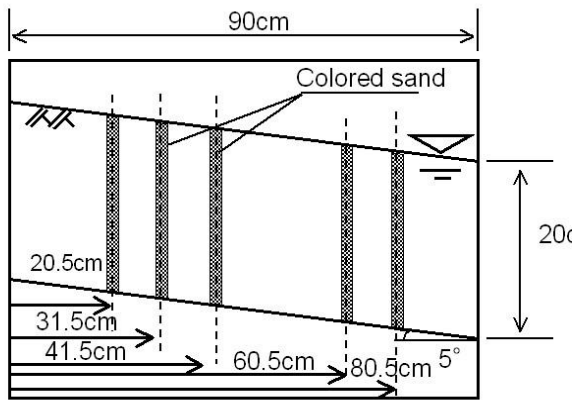

Fig. 6 Arrangement of the colored sand

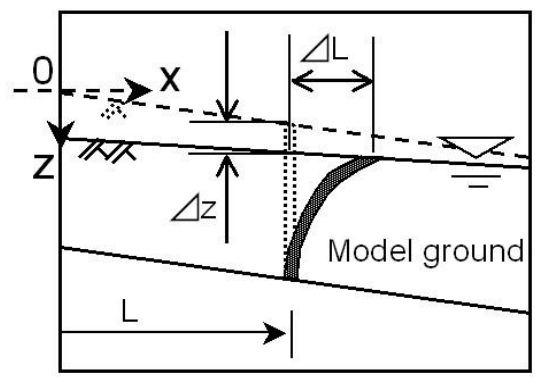

Fig. 7 Definitions of vertical and horizontal displacement

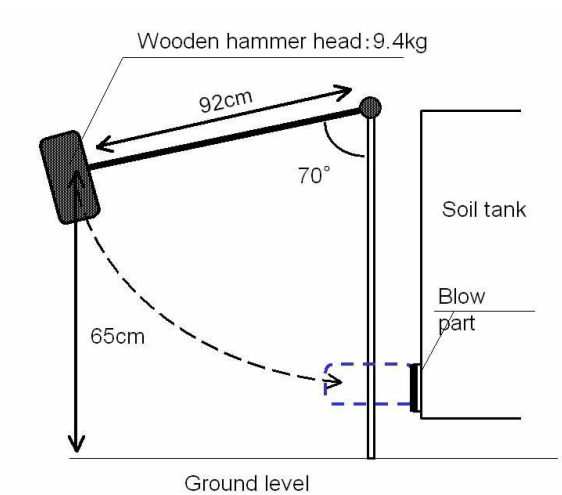

Fig. 8 Impact load

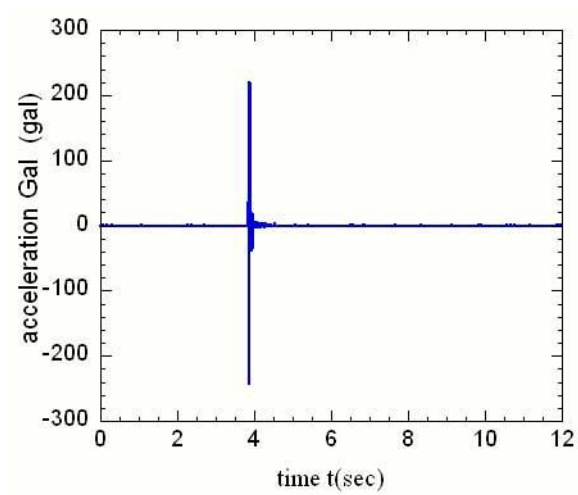

Fig. 9 Acceleration caused by impact loads

TEST RESULTS AND THEIR INTERPRETATION

A collection of results from the following three kinds of tests is shown in Figs. 4–7 to illustrate effects of gravel drain on liquefaction and liquefaction-induced lateral deformation. Those figures summarize observations of EPWP, lateral deformation, and vertical settlement:

i) model test without installation of gravel drain;
ii) model test with gravel drain, leading to liquefaction;
iii) model test with gravel drain, leading to no liquefaction.

Figures 10 and 11 illustrate the magnitude of lateral deformation at locations where the colored sand columns are installed. Variations of ERWP are shown for a representative location (labeled No. 4) that is 73 cm from the soil tank side wall and 18 cm from the bottom. Six locations are shown in Fig. 5 and with elapsed time in Fig. 12. The following were indicated from the tendencies shown in Fig. 10 to Fig. 12:

1) Maximum lateral deformation was observed at the vicinity of the center of the bottom in which vertical

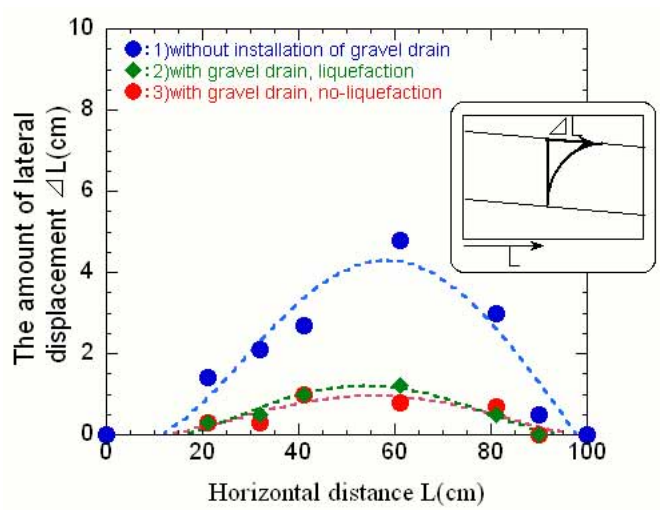

Fig. 10 Amount of lateral displacement after impact loading

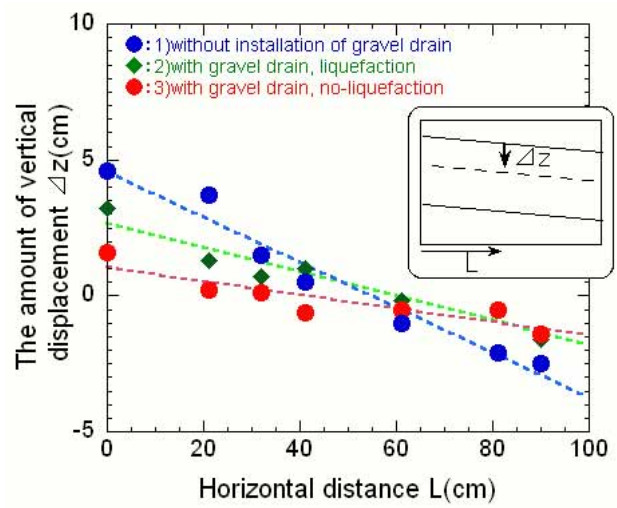

Fig. 11 Amount of vertical displacement after impact loading

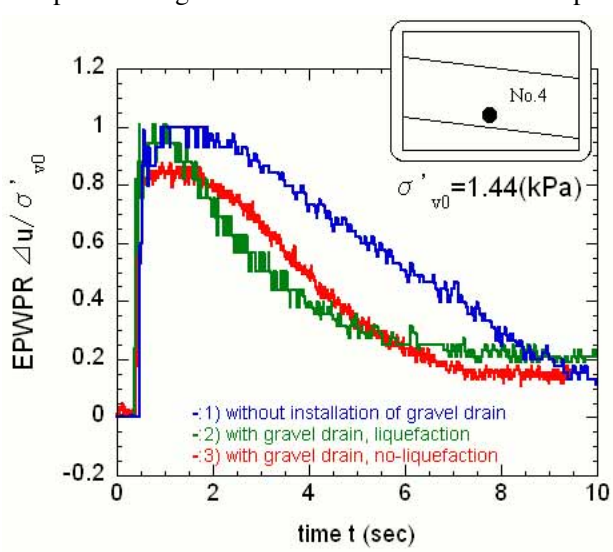

Fig. 12 Time history of EPWPR

settlement was nearly zero, whereas vertical settlement decreases with increasing horizontal distance from the soil tank side wall (left side in this case).
2) EPWP increases instantaneously at the application of impact loads and subsequently decreases with elapsed time. Even though this characteristic is similar to dissipation of EPWP in clay consolidation, the EPWP does not become completely null. A certain value of EPWP remains (20% of the vertical pressure remains in three cases). This tendency is independent of the existence of the gravel drain and liquefaction.
3) Drained gravel piles installed in sand deposits are available for prevention from liquefaction and reducing liquefaction-induced lateral deformation.
4) Even if liquefaction occurs in sand deposits with gravel piles installed, a gravel drain is available for reducing lateral deformation and vertical settlements, but the effect is less marked in comparison with the case in which sand deposits with a gravel drain do not suffer from liquefaction.

CONCLUSION

We investigated effects of gravel drain on mitigation of earthquake-induced lateral flow deformation of saturated Toyoura sand with uniform grain size distribution (ρ_s = 2.64 tf/m^3, D_{50} = 0.175, D_r = 50%) using 1 g laboratory model tests. Earthquake-induced dynamic loading was simulated using impact loads generated by lateral impact with a pendulum type-hammer against the model test equipment. Measurements were conducted for generation and dissipation of excess pore pressures during and after impact loading, and for settlement and displacement that occur during and after dynamic loading using both markers attached at the side plate of the apparatus and high-speed video camera images. Test results show that:
1) Maximum lateral deformation was observed at the vicinity of the center of the bottom, in which vertical settlement was nearly zero; also, vertical settlement decreased with increasing horizontal distance from the soil tank side wall (left side in this case).
2) EPWP increases instantaneously at the application of impact loads and subsequently decreases with elapsed time. Although this is similar to the dissipation of EPWP in clay consolidation, the EPWP does not become completely negligible; a certain value of EPWP remains (20% of the vertical pressure remains in three cases). This tendency is independent of gravel drain installation and occurrence of liquefaction.
3) Drained gravel piles installed in sand deposits are available for preventing liquefaction and reducing liquefaction-induced lateral deformation.
4) Even if liquefaction occurs in sand deposits with gravel piles installed, a gravel drain is available for reducing lateral deformation and vertical settlements, but the effect is less marked than in a case in which sand deposits with the gravel drain do not suffer from liquefaction.
5) For these reasons, we conclude that a gravel drain installed in medium dense sand with an inclined slope is effective for reducing excess pore pressure generation and subsequent displacement. In addition, post-cyclic settlement is also reduced in the inclined sand slope.

ACKNOWLEDGEMENTS: The authors would like to express their sincere thanks to Mr. Keizo Ootomo for his useful advice and continuous encouragement regarding this study. Cooperation from Mr. Tachikawa, Tachikawa Seisakusho Co. Ltd., is also appreciated for his effort in manufacturing the model equipment.

REFERENCES

1. Barron A.: Consolidation of fine-grained soils by drain wells, Trans. ASCE, Vol. 113, pp. 718–742, 1948.
2. Iai S, Koizumi K.: Estimation of earthquake induced excess pore water pressure for gravel drains. Proc. 7th Japan Earthquake Eng. Symp., pp. 678 – 684, 1986.
3. Iai S, Koizumi K, Tsuchida H.: A criterion for assessing liquefaction potential using grain size accumulation curves and N-values, Proc. 7th Japan Earthquake Eng. Symp., pp. 678–684, 1986.
4. Seed BH, Booker R.: Stabilization of potentially liquefiable sand deposits using gravel drains, Journal of Geotechnical Eng. Division, ASCE, Vol. 103, No. GT7, pp. 757–768, 1977.
5. Coastal Development Institute of Technology: Handbook on liquefaction remediation of reclaimed land, 1993.
6. Tokimatsu K, Yoshimi K.: Effects of vertical drains on the bearing capacity of saturated sand during earthquakes, Proc. Int. Conference on Engineering for Protection from Natural Disasters, pp. 643–655, 1980.
7. Tanaka Y, Takano J.: Verification of calculation methods for gravel piles using in-situ liquefaction tests results, Journal of JSCE, No. 388/III-8, pp. 33–42, 1987 (in Japanese).
8. Tanaka Y. et al.: On preventing liquefaction of level ground using gravel piles, Journal of JSCE, No. 352/III-2, pp. 89–98, 1984 (in Japanese).
9. Tanaka Y, Kokusho T, Esashi Y, Matsui I.: On preventing secondary liquefaction of level ground using gravel piles, Journal of JSCE, No. 364/III-4, pp. 97–106, 1984 (in Japanese).
10. Otomo K.: Load characteristics of ground lateral flow on in-ground structures, Journal of JSCE, No. 591/I-43, pp. 283–297, 1988 (in Japanese).
11. Yasuhara K, Unno T. et al.: Post-cyclic stiffness degradation in sand with initial static shear stress, Journal of JSCE, submitted for publication (in Japanese).
12. Unno T. et al.: Post-cyclic compression and extension shear behavior of sand, Journal of the Faculty of Engineering, Ibaraki University, No.50, pp.1–8, 2003 (in Japanese)
13. Unno T. et al.: Post-cyclic undrained compression and extension behavior of sand with initial static shear stresses in triaxial tests, Proc. JGS Conf., pp.473–474, 2003 (in Japanese).
14. Unno T, Yasuhara K, Komine H, Murakami S.: Effects of gravel drain method on lateral flow of sand in impact-type liquefaction model tests, Proc. 58th JSCE National Conf. on JSCE, Vol. III, pp. 299–300, 2003 (in Japanese).