Earthquake Engineering, Tenth World Conference © 1992 Balkema, Rotterdam. ISBN 90 5410 060 5

Optimal strategy by use of tree structure for post-earthquake restoration of lifeline network systems

N. Nojima & H. Kameda
Disaster Prevention Research Institute, Kyoto University, Uji, Japan

ABSTRACT: An effective procedure is presented for optimization of post-earthquake restoration processes of lifeline network systems. The graph theory and optimization theory are combined to derive optimal restoration process. Tree structures extracted from the original network configurations are used for selecting a prioritized set of components to be repaired for recovery of network connectivity. Horn's algorithm is then employed to determine repair sequencing of damaged components included in the tree structure. Numerical examples are presented to demonstrate the procedure proposed herein. The results show that minimum spanning trees are promising sets of repair sequences for effective post-earthquake emergency restoration of lifeline networks.

1 INTRODUCTION

Rapid recovery from earthquake damage is an important issue in lifeline earthquake engineering, because wide-spread networks of buried pipelines and their main-sub terminal hierarchical system structure are inevitable causes of earthquake damage to the network links (Nojima and Kameda (1990)). In order to realize rapid recovery, stockpiling of substitutional network components and quick assembling of repair crew should be promoted. Besides, it is also required to establish a pre-earthquake program to deal with many damages spread over wide area. Empirically accepted principles are such that slight damages should be repaired first, damaged components close to the source are primary ones to be repaired , and so on.

Several studies have been devoted to the purpose of optimizing the restoration processes of lifeline network functions involving various kinds of strategies. Those studies are aimed at the prediction of restoration processes of water distribution systems (Hoshiya et al. (1983) and Kameda et al. (1984)), city gas supply systems (Isoyama, et al. (1985)), road traffic systems (Yamada et al. (1988)), electric power supply systems (Ando et al. (1988)), and telecommunication systems (Takada, et al. (1990)). Some studies propose that the restoration process should be planned so as to maximize the slope of the restoration curve at each step.

In spite of these efforts, more studies should be done on optimization methods. Particularly, efforts should be taken to find out a procedure to maximize the overall efficiency of the entire restoration process. In this view of the problem, this study develops a comprehensive scheme to minimize total inconvenience to lifeline users due to its unavailability. On the basis of the restoration process of network connectivity, a problem of minimization of the cumulative effect of earthquake damage is formulated. A method which combines a technique of graph theory with that of optimization theory is developed to derive a reasonable optimal restoration process.

Tree structures extracted from the original network configurations are used for selecting a prioritized set of components to be repaired for recovery of network connectivity. An algorithm proposed by Horn is then employed to determine repair sequencing of damaged components included in the tree structure. Numerical examples are presented to demonstrate the comprehensive and strategic procedure proposed in this study.

2 CRITERIA OF OPTIMIZATION FOR POST-EARTHQUAKE RESTORATION

2.1 *Restoration curve*

Post-earthquake restoration processes of lifeline systems are commonly represented by time-dependent functions called "restoration curves". They are constructed by plotting the degree of lifeline restoration in percent against the time at which it is realized. The degree of restoration is evaluated in terms of various criteria such as supply-to-demand node connectivity, supply serviceability level, etc. They are generally non-decreasing with time.

Let a directed graph $G=(V,E)$ symbolically represent the network configuration of a lifeline system. In this notation, V and E denote a set of nodes and that of links, respectively. Suppose that the service for h_j $(j=1,2,\cdots,n)$ users linked to a demand node v_j is restored at time T_j after the occurrence of an earthquake. As typically illustrated in Figure 1, the restoration curve $R(T_j)$ is a stepwise function defined by

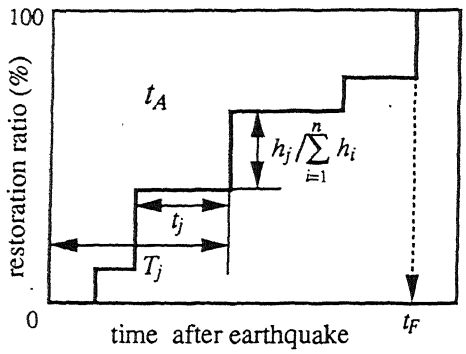

Figure 1. Formulation of restoration curve.

$$R(T_j) = \sum_{\sigma(k)\le\sigma(j)} h_k \Big/ \sum_{i=1}^{n} h_i \qquad (1)$$

where $\sigma(j)$ denotes, in a terminology of operations research, the "position number" assigned to each node v_j in the recovery sequencing. In Figure 1, t_F denotes the time when all the demand nodes are connected to the supply node and consequently the restoration activity for recovery of network connectivity is finished.

In this study, it is assumed that damaged components are repaired on unit-by-unit basis. Also assumed is that net time required for repair of each damaged component j is given as t_j. In this context, T_j can be written as

$$T_j = \sum_{\sigma(k)\le\sigma(j)} t_k \qquad (2)$$

2.2 *Optimization criteria*

A question arises as to what is the best restoration curve in determining the post-earthquake repair work schedule. A certain criterion for optimization of restoration process must be predetermined. The following two criteria are compared in this study.

(1) Local optimization
In previous studies, a local optimization criterion has been used so that the slope of the restoration curve at each step of restoration is maximized. The local efficiency of restoration of node v_j is defined by

$$\gamma_j = h_j / t_j \qquad (3)$$

which is evaluated step-by-step. Then the node v_j with the maximum value of γ_j has the priority to be restored at the step being considered. Therefore, this procedure is based on stepwise local optimization. In previous studies, it has been anticipated that successive application of local optimization will lead to global optimization of the entire restoration process. However, it is clear that local optimization does not assure the global optimization.

(2) Global optimization
A typical criterion for the global optimization is the minimization of the upper-part area of restoration curve in Figure 1. This area can be calculated by

$$t_A = \frac{h_1T_1 + \cdots + h_nT_n}{h_1 + \cdots + h_n} = \sum_{i=1}^{n} h_iT_i \Big/ \sum_{i=1}^{n} h_i \qquad (4)$$

The linear delay penalty t_A, which also represents average time for restoration of the entire users, can be regarded as a fundamental measure of overall impact of lifeline malfunction.

The best restoration process is realized by the best repair sequencing $\sigma(j)$ that minimizes the value of t_A. A method to realize the global optimization will be developed in the following chapters.

3 TREE STRUCTURES FOR RESTORATION STRATEGY

3.1 *Use of tree structures for restoration planning of lifeline networks*

The first task in post-earthquake emergency of lifeline systems is prompt recovery of network connectivity. The term connectivity means that all demand nodes are reachable from at least one supply node via at least one path, so that network content such as water and city gas can be transported to users. Since most lifeline systems consist of redundant networks, connectivity can be recovered before all damaged links are repaired if the repair sequence is properly scheduled. Even if not the full service, minimal requirement of urban activities can be satisfied by recovering network connectivity. Tree structures in the sense of graph theory meets this purpose.

A tree is a connected graph spanning all nodes but not containing any circuit loops (closed paths). Recovery of network connectivity can be interpreted as the establishment of a tree structure $G_T=(V,T)$, where T is a subset of E. Since a tree is composed of minimal number of links required for network connectivity, realizing a tree structure will be a reasonable strategy to recover lifeline connectivity with minimum repair works under post-earthquake emergency.

A question then arises how to search for a tree structure which is advantageous for prompt restoration. Actually, the number of trees of a directed graph adds up to $\prod_{\delta_j^- \neq 0} \delta_j^-$ where δ_j^- is the number of links directed to a node v_j. It is, therefore, a primary task to select a proper tree as lifeline restoration scheme.

3.2 *Candidate trees to be used for restoration planning*

A weighted graph consists of a graph together with a weight w_j assigned to each link e_j. In this study, the net time t_j for restoration of each damaged link is used as w_j. The minimum spanning tree and the shortest path tree are defined on the basis of these weights.

(1) minimum spanning tree (MST)
A minimum spanning tree (Buckley and Harary (1988)) is a spanning tree with minimum total weight. Since t_F is minimized by MST, connectivity of network can be achieved in the shortest time by adopting MST.

(2) shortest path tree (SPT)
A shortest path tree consists of traces of the shortest paths from a specific node to all the other nodes. The term "shortest" is used in the sense that the sum of the weights along every path is minimum. In this study, SPT means every demand node that was disconnected to supply nodes due to the damage has possibility to be restored in the shortest time. Floyd's algorithm (Mandl (1979)) searching for the shortest paths can be used to extract SPT.

(3) random trees by orthogonal array
In addition to MST and SPT which are strategically constructed, random trees are also used to make comparisons. Enumeration of all trees is unpractical because they are as many as mentioned in section 3.1. An orthogonal array (Takakuwa (1978)) can be used to generate moderate number of trees that covers as various cases as possible. This sampling method is based on the technique of design of experiments.

(4) approximately optimum tree (AOT)
Assume that penalty values have been determined for each tree generated by orthogonal array. The nature of orthogonal array allows one to construct a tree with approximately smallest value by a statistical operation to random trees (Takakuwa (1978)). This tree, termed AOT, is often one that has never appeared in random trees.

4 RECOVERY SEQUENCING OF DAMAGED COMPONENTS IN THE SELECTED TREE

The second stage of the optimization procedure is the determination of recovery sequencing. It is assumed that repairs of damaged links are always executed in the downstream directions; i.e., since the network under consideration has been reduced to the tree structure, repair of a damaged link e_j is equivalent to recovering connection of the node v_j to the supply node.

4.1 *maximum slope method*

Maximum slope method is a conventional method to deal with the problem through local optimization as discussed in 2.2(1). Suppose that l nodes, denoted by a set S, have been connected to the supply node at a certain restoration stage. Candidate nodes for the $(l+1)$th restoration are those nodes that are reachable from nodes belonging to the set S via only one damaged link. These nodes are indicated by a set $H(S)$. Local efficiency of restoration of node v_j is defined by equation (3). Then the node to be restored next is determined as follows:

$$v_{next} = \sigma^{-}(l+1) = \left\{ v \mid \max_{v_j \in H(S)} \gamma_j \right\} \qquad (5)$$

Because of the local optimization based on local efficiencies, the restoration process using this method is often far from optimal.

4.2 *Global optimization by use of Horn's algorithm*

Horn (1972) proposed an algorithm which rigorously solve the optimization of job sequencing with tree-shaped precedence ordering. If appropriately applied to the problem of minimization of t_A in equation (4), Horn's algorithm provides the best sequencing of repair of damaged components included in the tree structures. The sequencing in this case is achieved by replacing γ_j in equation (5) by an improved efficiency γ_j^* considering the total efficiency for all downstream links, which is calculated by

$$\gamma_j^* = \sum_{i \in U(j)} h_i \Big/ \sum_{i \in U(j)} t_i \qquad (6)$$

where $U(j)$ denotes a subset of a set of nodes that are reachable from node v_j. $U(j)$ is determined so that γ_j^* takes on the greatest value. As for details of this algorithm, readers are referred to Horn (1972) or Mandl (1979). The use of equation (5) and (6) provides the optimal sequencing for any given tree structure.

Figure 2 shows a model of reduced tree from a network constructed to demonstrate the usefulness of the algorithm. Uniform value of $h_j = 1$ is assigned to each demand node v_j. Node v_1 is the only supply node and the others are demand nodes. Eighteen links out of 24 have suffered damages. Net time required for repair of each damaged link is designated on each link.

Repair sequencing based on the maximum slope method and that based on Horn's algorithm are listed in Table 1. Local and improved efficiencies, γ_j and γ_j^*, are also listed. Let us consider the first step of restoration process, where $S = \{1, 6\}$ and $H(S) = \{2, 7, 11, 12\}$. Efficiency of restoration of node 2 alone is $\gamma_2 = 1/5$, which is less than $\gamma_{11} = 2/4$. However, if restoration of node 2 is followed by restoration of node 3 (,4 and 10), the efficiency turns out to be $\gamma_2^* = 4/6$, which is greater than any other values of efficiency. In Figure 2, elements of $U(2)$, $U(7)$, $U(11)$ and $U(12)$ are highlighted by enclosed lines.

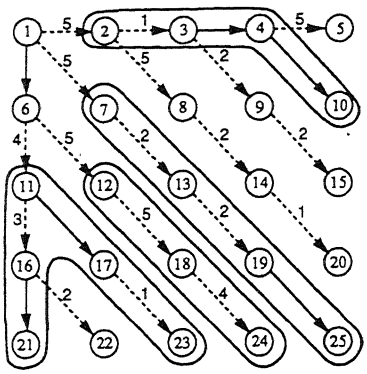

Figure 2. Model of tree-like network (numbers on links denote time for repair t_j).

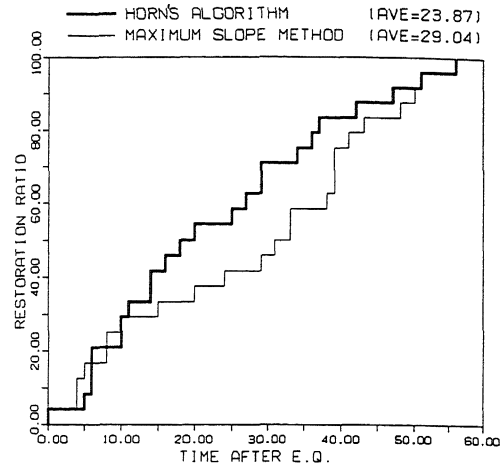

Figure 3. Restoration curves (See Figure 2 and Table 1).

Table 1. Repair sequencing based on maximum slope method and Horn's algorithm.

	max. slope method		Horn's algorithm	
sequential No.	Node	γ_j	Node	γ_j^*
1	11	0.500	2	0.667
2	23	1.000	3	3.000
3	16	0.667	11	0.625
4	22	0.500	23	1.000
5	12	0.200	16	0.667
6	18	0.200	21	0.500
7	24	0.250	9	0.500
8	7	0.200	15	0.500
9	13	0.500	7	0.444
10	19	1.000	13	0.750
11	2	0.200	19	1.000
12	3	3.000	8	0.375
13	9	0.500	14	0.667
14	15	0.500	20	1.000
15	8	0.200	12	0.214
16	14	0.500	18	0.222
17	20	1.000	24	0.250
18	5	0.200	5	0.200

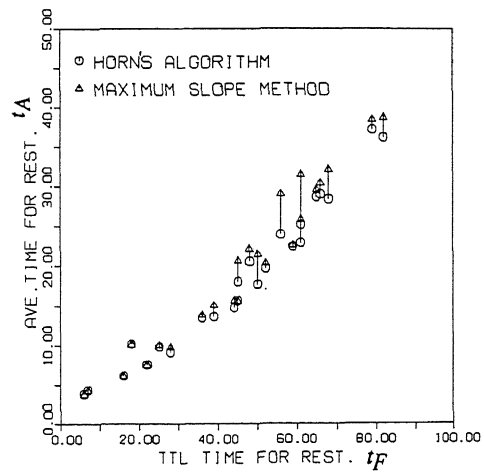

Figure 4. Average time for restoration t_A (25 random samples of damage).

Figure 3 compares restoration curves corresponding to two recovery sequencings listed in Table 1. Restoration process based on Horn's algorithm results in t_A=23.87, which is smaller than that from the maximum slope method giving t_A=29.04, even though the total restoration time t_F is identical for the two cases.

Monte Carlo simulation has been performed to generate 25 random samples of damage state. Figure 4 shows the plots of the total restoration time t_F (horizontal) versus average time for restoration t_A (vertical) for 25 cases. It is obvious that Horn's algorithm gives smaller (or at least equal) value of t_A than the maximum slope method.

5 NUMERICAL EXAMPLE

5.1 *Schematic model*

A grid-like redundant network model shown in Figure 5 is used to demonstrate the scheme proposed in this study for constructing reduced trees and optimization of the restoration process. The node v_1 is the only supply node, and h_j =1 is uniformly assigned.

After obtaining minimum spanning tree (MST), shortest path tree (SPT) and 16 random trees, Horn's algorithm is applied to each tree. Then approximately optimum tree (AOT) is extracted using the result of t_A for 16 random trees. The configurations of MST, SPT and AOT are shown in Figure 6.

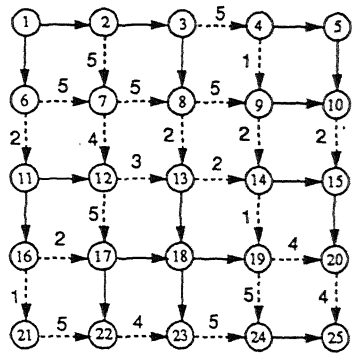

Figure 5. Model of network (numbers on links denote time for repair t_j).

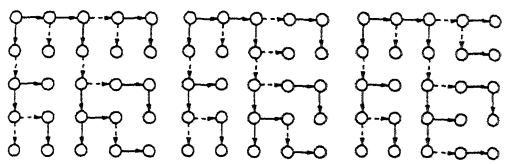

(a) MST (b) SPT (c) AOT

Figure 6. Tree structures (See Figure 5).

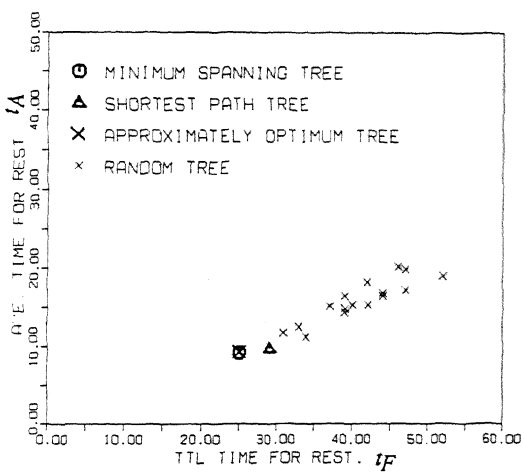

Figure 7. Average time for restoration t_A by use of various tree structures.

Figure 7 shows plots of the total restoration time t_F (horizontal) versus average time for restoration t_A (vertical) for 19 trees (MST, SPT, AOT, and 16 random trees). It can be observed that MST and AOT give the smallest value t_A, which can be regarded as the best scheduling. The values of t_A for MST and SPT for 25 generated random samples of damage state are shown in Figure 8. MST produces more desirable restoration process than SPT giving smaller value of t_A.

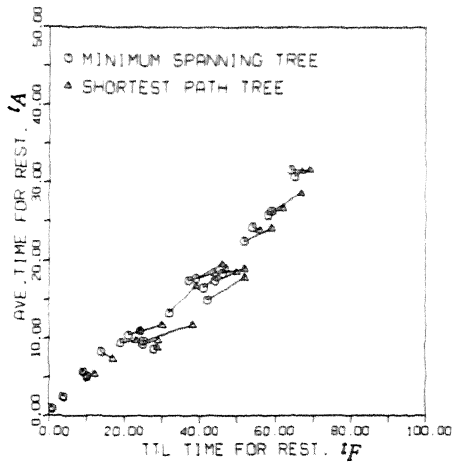

Figure 8. Average time for restoration t_A by use of MST and SPT (25 random samples of damage).

Similar analyses have been performed using network models of several types. Followings are general tendency found in those results.

(a) MST not only minimizes total restoration time t_F but also promisingly minimizes average time for restoration t_A.
(b) SPT is also usable, but mostly MST is more preferable.
(c) Although the use of AOT usually leads to good result, one must handle very large orthogonal array if the network is highly redundant, which implies time-consuming analysis to determine AOT.

5.2 *Realistic model*

Figure 9 illustrates a network model of an existing water distribution trunk line (ϕ600-1500mm). Node 1 is a water distribution plant treated as a virtual source in this model. Demand nodes are placed at points where branch lines with diameter of more than 500mm are connected to the trunk lines. Numbers on links denote relative time required for repair of each damage link. A hypothetical damage state is assigned to each link considering ground condition and length of links. Two cases of distribution of users are assumed.

case A : users concentrate on large-scale evacuation zone located at nodes 12, 17, 24, 27, 29 and 34.

case B : users spread over emergency refuges located at all nodes but node 1.

Large-scale evacuation zones are places where more than ten thousand refugees can be accommodated in case of earthquake-induced conflagration. Emergency refuges are buildings with equipment for feeding service to refugees; most of them are school buildings. Table 2 compares average time for restoration t_A as the result of four kinds of restoration process for two

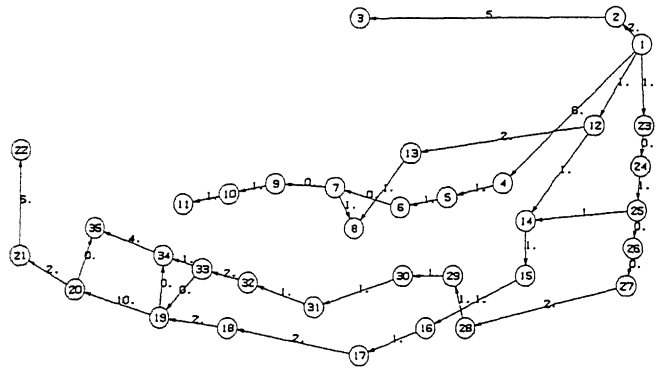

Figure 9. Model of water distribution trunk line (numbers on links denote time for repair t_j).

Table 2. Comparison of average time for restoration t_A.

	case A		case B	
	MST	SPT	MST	SPT
Horn's algorithm	5.64	5.92	16.38	17.04
max. slope method	6.94	7.31	18.04	18.67

cases A and B. Note that the combination of MST and Horn's algorithm leads to the best performance in both cases.

6 CONCLUSIONS

Major conclusions derived from this study is summarized as follows.

(1) Post-earthquake optimization of lifeline function has been modeled and formulated for the minimization of average time for restoration. Global optimization has been proposed as a measure more reasonable than the conventional local optimization.

(2) Three types of tree structures, minimum spanning tree, shortest path tree, and approximately optimum tree, have been compared as prioritized sets of links to be repaired for satisfying network connectivity. Minimum spanning trees are found to be the most efficient tree structures in many cases examined.

(3) It is proposed that Horn's algorithm for job scheduling problem be applied to determine repair sequencing of damaged components included in a tree structure of the original network.

(4) Optimization scheme proposed in this study has been demonstrated using example networks. Damaged components that should be repaired with priority are those belonging to the minimum spanning tree. The repair sequencing of components included in the minimum spanning tree can be determined by the Horn's algorithm.

ACKNOWLEDGMENT

This study is supported by Grant-in-Aid for Scientific Research No.02302060 and No.02952168 from the Japanese Ministry of Education, Science and Culture.

REFERENCES

Ando, T., Noda, S., and Hamada, M. 1988. Practical strategies for post-earthquake restoration of electric power systems. *Proc. of the Ninth World Conference on Earthquake Engineering*, Vol.VII: 159-164.

Buckley, F. and Harary, F. 1990. *Distance in graphs.* Addison-Wesley Publishing Company.

Horn, W. A. 1972. Single-machine job sequencing with treelike precedence ordering and linear delay penalties. *SIAM, Journal of Applied Mathematics*, Vol.23, No.2: 189-202.

Hoshiya, M. and Miyazaki, M. 1983. Prediction of seismic damage restoration of underground water supply systems. *Proc. of JSCE*, Vol.331: 45-54 (in Japanese).

Isoyama, R., Iwata, T. and Watanabe, T. 1985. Optimization of post-earthquake restoration of city gas systems. *Proc. of the Trilateral Seminar-Workshop on Lifeline Earthquake Engineering*, Taipei, Taiwan: 3-17.

Kameda, H., Goto, H., and Kasuga, T. 1984. System reliability and serviceability of water supply pipelines under seismic environment. *Proc. of the Eighth World Conference on Earthquake Engineering*, Vo.VII: 491-498.

Mandl, C. 1979. *Applied network optimization.* Academic Press.

Nojima, N., Kameda H. and Shinozuka, M. 1990. Fundamental structure of earthquake disaster countermeasures in lifelines. *Journal of Natural Disaster Science*, Vol.12, No.1: 29-47.

Takada, S., Takatani, T. and Morioka, T. 1990. An expert system of post-earthquake restoration works for lifeline network. *Proc. of the Eighth Japan Earthquake Engineering Symposium*, 2151-2156 (in Japanese).

Takakuwa, T. 1978. *Analysis and design of water distribution networks.* Morikita Publishing Company: 226-232 (in Japanese).

Yamada, Y., Noda, S. and Igarashi, A. 1988. Practical simulation method for restoration process of road transportation systems damaged by earthquakes. *Proc. of JSCE*, Vol.392/I-9: 385-394 (in Japanese).