Earthquake Engineering, Tenth World Conference © 1992 Balkema, Rotterdam. ISBN 90 5410 060 5

Seismic performance of a glued-laminated timber frame

I. Sakamoto, Y. Ohashi, M. Inayama & H. Isoda
The University of Tokyo, Japan

ABSTRACT: A beam-column timber frame with moment resisting joints without shear element is proposed. The columns and beams are made of glued-laminated timber. A coupled beam is connected to a column with bolts and shear plates to form a moment resisting joint. Seismic response analyses on the proposed frame of three stories were carried out based on the moment-rotation relationships obtained by the experiments of the joints. The results of the seismic response analyses showed relatively large story drift. However, the proposed frame could be applied for practical use if some improvements on the joints and some design considerations on nonstructural elements are made, because the frame is very ductile.

1 INTRODUCTION

The revival of wooden large structures took place in Japan only several years ago after thirty years of depression. The most typical buildings constructed using such wooden structures are gymnasiums and exhibition halls, which have a wide column-free space. Another promising building will be an office or a residential building. A suitable structural type for these building is a frame consisting of beams and columns.

There are two types of beam-column frame. One of them is a frame with shear elements such as shear walls and diagonal braces. The other type is a frame free from such shear elements, that is, a beam-column frame with moment resisting joints. Several researchers have made experimental and theoretical researches on the frames [Komatsu(1988,1991), Seccotti(1990)]. The authors have been trying to develop a beam-column frame of this type mainly from the view point of seismic design. The most essential element of the frame is the moment resisting joints. Several types of moment resisting joint have been examined through experiments and theoretical analyses[Sakamoto(1989)].

One of the possible moment resisting joints is bolted one with shear plates. A frame with three stories using this type of joint is proposed. The frame is made of glued- laminated timbers. A coupled beam is connected to a column on its both sides with bolts and shear plates.

The seismic behavior of the frame was simulated by established models based on the moment-rotation relationships obtained by the experiments.

2 EXPERIMENTS ON THE MOMENT RESISTING JOINT

2.1 Specimen

Each specimen consists of a column and a coupled beam which are jointed together to form a cross-shaped assemblage. Sectional sizes of column and beams are 15cm*50cm. The members are made of glued-laminated timbers of Grade One, according to the Japanese Agricultural Standard. The lamina made of Douglas-fir is 18mm thick.

The layout of bolts is shown in Fig.1 .

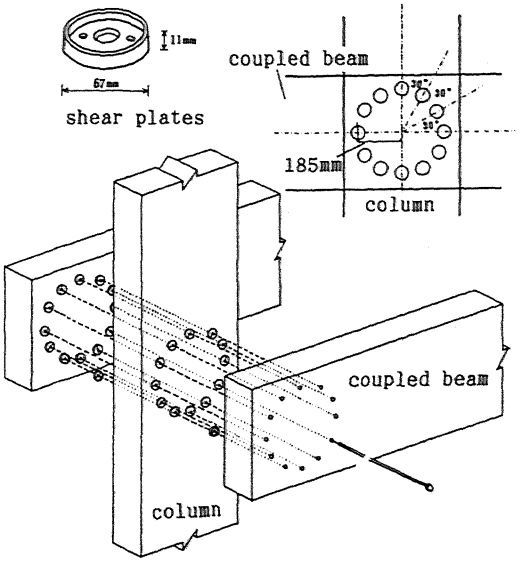

Figure 1. The layout of bolts

Shear plates(67mm) are inserted between the column and the beam, which are then bolted together. All bolts were fastened up to a torque of 700kgcm.

2.2 Testing method

The set-up of the test is shown in Fig.2. The specimens were laid horizontally. All ends of the members were supported by pin-joint made of steel. Two ends of the beams were loaded by an oil-jack, so that only the bending moment is produced in the column-beam joint.

The cyclic load was applied to the specimens.The maximum rotational angle in the first cycle was +-1/500rad., then the maximum rotational angle of the following cycle was times as large as the previous one.

2.3 The results of test

An example of the moment-rotation relationships obtained from the test is shown in Fig.3. In the range of rotational angle smaller than 1/120rad., the resisting moment scarcely increased, owing to the gap between a shear plate and the circular notch engraved on the column and the beams due to an error in workmanship. As a whole ,however, the joint of shear plates showed high ductility beyond 1/30 rad. Critical failure of each specimen occurred at the shear plates on the center line of the column, because the stress perpendicular to the grain is the biggest at these shear plates than at the other shear plates.

The critical failure took place when the shear plates cleave the wood of the column. The cleavage of wood itself shows a brittle failure, but the joint keeps enough ductility before the cleavage because of the compressive deformation perpendicular to the grain of wood.

2.4 The skeleton curve model

The skeleton curve of moment-rotation relationships of the test can be regarded as tri-linear as shown in Fig.4. In this model,the following assumptions were made:

1.There is no gap between the shear plate and the circular notch engraved on the column and beams. Therefore, the initial stiffness is assumed to be same as the original stiffness "k1" as shown in Fig. 4.

2.The yielding moment is the minimum value at the plateau before the critical failure.

The moment at the first turning point "sMy" and the stiffness of the second branch "k2" are determined so that the absorbed energy of the model is approximately equal to that of the skeleton curve of the test.

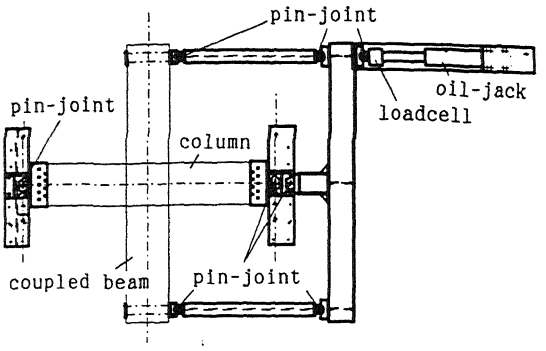

Figure 2. Set-up of the test

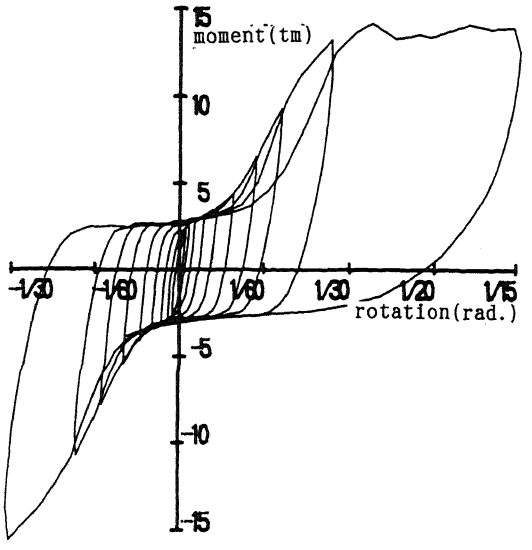

Figure 3. Moment-rotation relationships

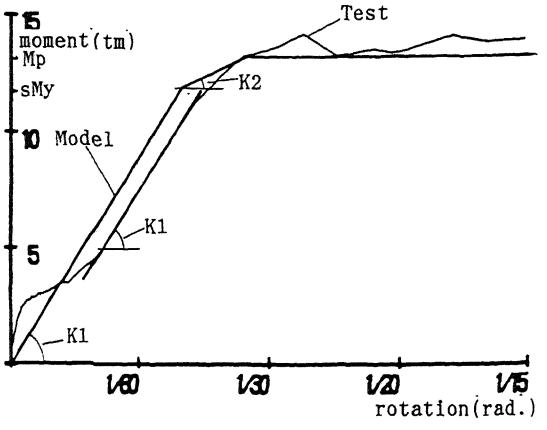

Figure 4. The skeleton curve of moment-rotation relationships of the test and the skeleton curve model.

3 PROPOSED MODEL AND ITS DIMENSIONS

A structure of three stories as shown in Fig.5 was established for seismic response analyses. The frames in the span direction of the structure are of the proposed one, in which the moment resisting joints are employed and there is no shear elements. The frames in the longitudinal direction have some shear walls or diagonal braces. The analyses were made on a frame in the span direction.

The standard sectional dimensions of the coupled beam and the column are 15cm * 50cm. The span in the span direction is fixed as 6m and the height of story is also fixed as 3m.

The following variations are employed for examination of seismic response analyses. The alphabet and the numeral in each parenthesis will be used to represent the case.

Number of the frame along the longitudinal direction(frame):
2(A) and infinity(B)

Span in the longitudinal direction(span):
6m(6) and 3m(3)

Dimensions of the beam and the column (dimension):
15cm*50cm(S) and 15cm*75cm(L)

The weight of the building is assumed as an ordinary residential building with usual finishes. The unit weights are as follows.

	Dead Load	Live Load(kg/m^2)
Roof	250	0
Floor	250	130 for beam 60 for seismic force
External Wall	150	0

The model of the frame in the span direction was established as shown in Fig.6. The columns and beams are of bending members which are also subjected to shear deformation. The joints between the column and the beam are represented by rotational springs. The elastic stiffness of the rotational spring was determined according to the model of moment-rotation relationships of joint as mentioned in 2.4.

The static stress analyses were made on the frame in every case of variation when it is subjected to the vertical load and to the seismic horizontal load. The allowable strength of the moment resisting joint was computed based on the "Standard for Structural Calculation of Timber Structures" of the Architectural Institute of Japan. The base shear coefficient "q" in which the moment of any one of the joints reaches its allowable strength , is shown in Table 1. The story drifts "1/R" due to the design horizontal load of base shear coefficient of 0.2 and the fundamental periods "T" of the first mode of vibration are also shown in Table 1.

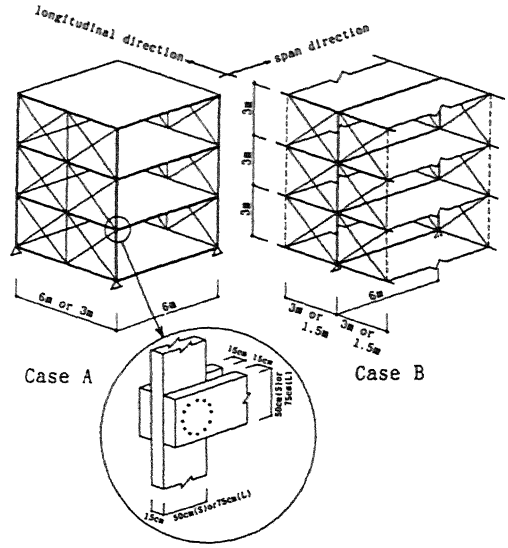

Figure 5. The structures of three stories

Table 1. The cases of structure and their resultant design values

dimension	frame	span	q	1／R	T
S	A	6	0.11	1/24	1.40
		3	0.31	1/49	0.99
	B	6	0.24	1/40	1.09
		3	0.46	1/68	0.83
L	A	6	0.25	1/41	1.07
		3	0.57	1/83	0.76
	B	6	0.45	1/68	0.83
		3	0.82	1/116	0.63

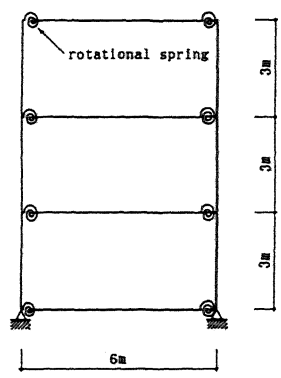

Figure 6. The model of the frame in span direction

4 STATIC ANALYSES FOR HORIZONTAL LOADING

The static behaviors of the model of frame were calculated by incremental-iteration method in order to get the envelope of the load-deflection relationships of each story. The distribution of the applied horizontal load was assumed to be proportional to the first mode of vibration. As a result, the mechanism was formed in all cases of frames as shown in Fig.7, in which all stories of the structure collapsed at the same time. As mentioned in 2.3 , the joints show very high ductility and can keep ability to support the vertical load. Accordingly these joints can be treated as the plastic hinges at the end of the beams.

One of the results of the envelopes of load-deflection relationships of each story is shown in Fig.8.

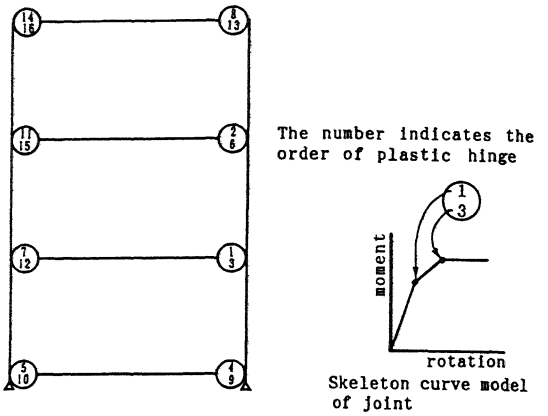

Figure 7. Mechanism of the frame

5 SEISMIC RESPONSE ANALYSES

The response analyses were made using a lumped mass model with shear type springs as shown in Fig.9. Number of the lumped mass is three. Each spring deforms independently with one another.

The distribution of weight Wi of lumped masses was assumed according to the eight cases of the frames.

The following hysteresis model as shown in Fig.10 [Sakamoto(1988)] was employed.

The envelope has three turning points in each direction. In small deflection up to the first turning point ① , load-deflection relationships are linear. When the deflection exceeds the first turning point ① , the load deflection relationships become bi-linear. When the deflection exceeds the second turning point ②, the load deflection relationships behave non-linearly. After the second cycle of this range, the degradation in stiffness and the residual deflection are controlled by the indices α and γ , respectively. After the deflection exceeds the third turning point ③ , the load deflection relationships have negative slope. In the cyclic loading with the deflection greater than the point ②, the load deflection relationships pass the specific point Ⓢ.

The envelope was ,basically, made from the assumed moment-deflection curve of each story. Specific point is located just middle way from the origin to the first turning point . For the seismic response analyses these envelopes were substituted by the above mentioned tri-linear model as shown in Fig.11. The first turning point was determined to correspond to the formation of the first hinge. In the same way, the second turning point and the third one were determined to correspond to the formation of the

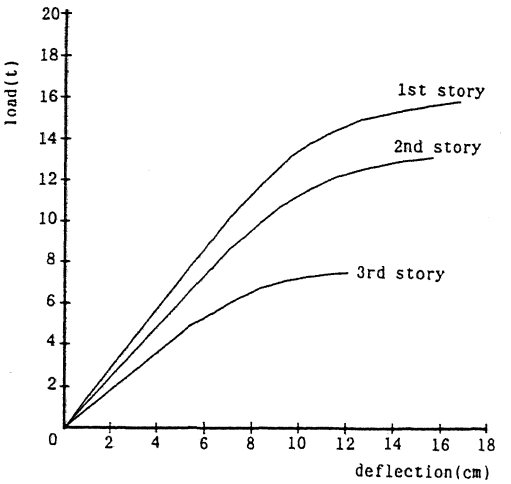

Figure 8. Envelopes of load-deflection relationships

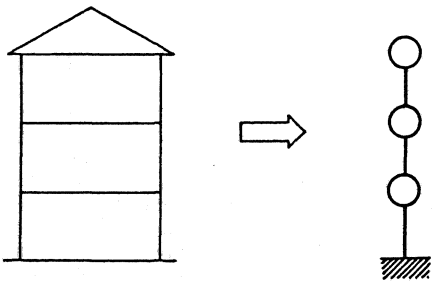

Figure 9. The lumped mass model

seventh hinge and the last one, respectively. The degradation ratio due to cyclic loading α is 20%. And the residual deflection ratio γ is taken as 63.5% for the case S and 68% for the case L, according to the following reason. Although the total deflection is composed of the deformation of the timbers and of the rotation of the joints, the residual deflection is induced only by the joint, because the timbers are treated as elastic. The total residual deflection ratio was assumed to be constant, considering the decrement of the ratio in the joint itself beyond the first turning point and the increment of the share of the joints in the total deflection.

The ground motion records used were EL CENTRO 1940 NS and TAFT 1952 EW , which are well-known ones as recorded on relatively hard soils, and also HACHINOHE 1968 EW, which was obtained on relatively soft soils. The amplitudes of them were modified for the computation as the maximum velocity become 25 kines and 50 kines.The viscous damping factor is assumed as 3%.

One of the results of the analyses is shown in Fig.12. Maximum story drifts and maximum base shear coefficients are shown in Table 2.

6 DISCUSSIONS

The seismic response analyses were made on the eight cases of frame model subjected to the three strong ground motion records of two levels. Maximum story drift in radian as shown in Table 2 show large values not only for the ground motion of 50 kines but also for the ground motion of 25 kines. These results are attributed to low initial stiffness of the frames.

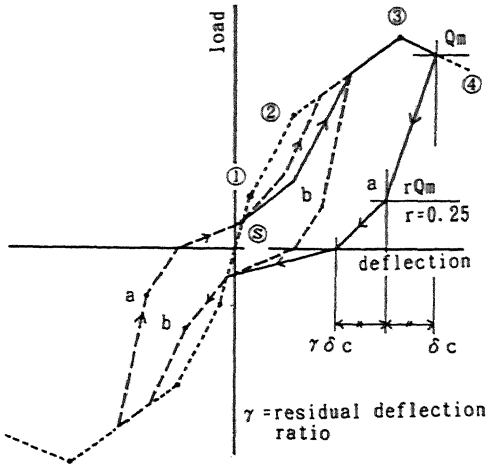

Figure 10. Hysteresis model

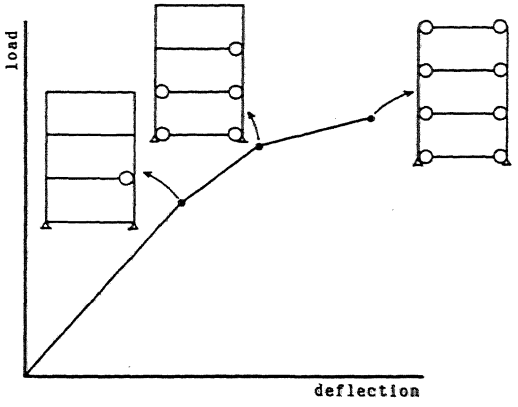

Figure 11. Tri-linear model of the envelope

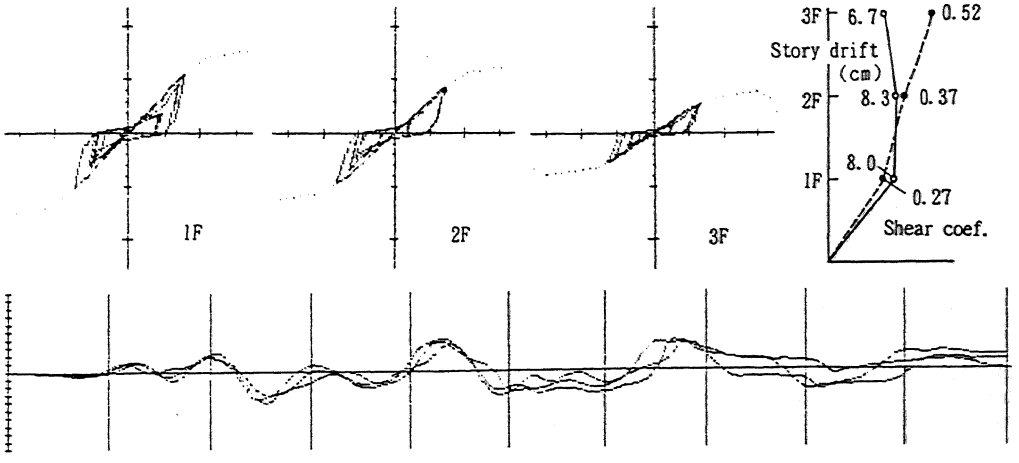

Figure 12. One of the results of the response analyses (S-A-6, HACHINOHE, 50kines)

If the critical condition in which the frame might collapse is set as the gravity force at the top of the columns gives a positive overturning moment to the frame, the limit of the drift is 1/36rad. (50cm/2/900cm) and 1/24rad. (75cm/2/900cm), for the case of S and the case of L, respectively. The cases of S reach the critical condition when they are subjected to the HACHINOHE records of 50 kines. The performance of the cases of L is better and their maximum drifts are within the limit.

If the limit of story drift is set as 1/60rad. for the ground motions of 25 kines, in which nonstructural elements such as exterior walls and partitions might get some damages without critical failure, the case A3 , B6 and B3 of L could be accepted.

However, Building Regulations in Japan require the drift limitation of 1/120rad. for standard base shear coefficient of 0.2 in the static seismic design. The cases A3 , B6 and B3 of S do not satisfy the criteria.

On the other hand, the base shear coefficients in which the moment of any joint reaches its allowable strength as shown in Table 1, are 0.57 , 0.45 and 0.82 for the resisting joints.

Table 2. Results of the seismic response analyses
(Upper:Maximum story drift in radian. Lower:Maximum base shear coefficients)

dimension	frame	span	EL CENTRO		TAFT		HACHINOHE	
			25	50	25	50	25	50
S	A	6	1/56 0.19	1/41 0.26	1/52 0.21	1/34 0.29	1/54 0.20	1/38 0.27
		3	1/48 0.45	1/35 0.58	1/91 0.24	1/45 0.48	1/51 0.42	1/30 0.65
	B	6	1/52 0.34	1/47 0.38	1/69 0.26	1/41 0.43	1/41 0.42	1/28 0.55
		3	1/67 0.45	1/40 0.75	1/52 0.57	1/25 1.00	1/64 0.47	1/36 0.81
L	A	6	1/50 0.38	1/40 0.45	1/77 0.24	1/46 0.41	1/45 0.42	1/34 0.52
		3	1/93 0.41	1/46 0.81	1/84 0.45	1/42 0.90	1/84 0.45	1/42 0.90
	B	6	1/72 0.43	1/38 0.77	1/54 0.57	1/38 0.79	1/65 0.47	1/39 0.77
		3	1/79 0.66	1/39 1.30	1/98 0.53	1/49 1.06	1/130 0.40	1/65 0.80

7 CONCLUSIONS

The static analyses and seismic response analyses showed that the proposed frame with the moment resisting joints is so flexible that it tends to undergo relatively large story drift. However, as this frame has a very high ductility, it could be stable as a structure under a large story drift.

The proposed frame with moment resisting joints could be applied for practical use if the following conditions are achieved,

(1) The stiffness of the joint is increased through improvement of bolted joints with shear plates.

(2) Non structural elements are designed to accommodate the story drift produced by seismic response.

REFERENCES

Komatsu,K. , Kawamoto,N & Harada,M 1991. Modified glulam moment- resisting joints. Proc.1991 International Timber Engineering Conference:Vol3,3.111-3.118.

Komatsu,k. , Kamiya,F. & Hirashima,Y. 1988. Full-size test and analysis on glulam two storied portal frames.Proc. 1988 International Conference on Timber Engineering: Vol 2,205-220.

Sakamoto,I. & Ohashi,Y. 1989. Study on laminated timber moment-resisting joint. Proc.2nd Pacific Timber Engineering Conference:Vol.2 37-42.

Sakamoto,I. & Ohashi,Y. 1988. Seismic response and required lateral strength of wooden dwellings. Proc.1988 International Conference on Timber Engineering: Vol2,243-247.

Seccotti,A. & Vignoli,A. 1990 Engineered timber structures. An evaluation of their seismic behaviour. Proc. International Timber Engineering Conference:946-953.