Earthquake Engineering, Tenth World Conference © 1992 Balkema, Rotterdam. ISBN 90 5410 060 5

Models of critical regions and their effect on the seismic response of reinforced concrete frames

F.C. Filippou & N. Zulfiqar
University of California, Berkeley, Calif., USA

ABSTRACT: A new approach in describing the hysteretic behavior of inelastic regions in reinforced concrete moment resisting frames is proposed. This approach consists of subdividing the inelastic region into slices called critical regions at locations where cracks form. The response of each critical region to loads or deformations which are applied at the cracked end sections of the region is determined separately and the results combined to yield the response of the inelastic region. The model is used in the analysis of interior and exterior beam-column joints, girder inelastic regions and beam-column subassemblages.

1 INTRODUCTION

Reinforced concrete (RC) structures designed according to present building codes as moment resisting space frames, shear-walls, coupled shear-walls or any combination thereof to withstand strong earthquake motions are expected to deform well into the inelastic range and dissipate the energy input by the base motion through stable hysteretic behavior of structural components. Since inelastic deformations are typically concentrated at certain critical regions within the structure, the accurate prediction of the mechanical behavior of the structure during earthquake excitations depends on the development of reliable analytical models which describe the hysteretic behavior of these regions.

In a typical lower story of a reinforced concrete moment resisting frame, which is designed according to current provisions of earthquake resistant design and is subjected to large lateral displacements, inelastic deformations concentrate at the ends of girders and at beam-column joints (Figure 1). The ideal analytical model of the hysteretic behavior of these inelastic regions should be able to account for all factors which are responsible for the stiffness and strength deterioration of these regions. Among the most important factors is the cyclic bond deterioration along the reinforcing bars, the hysteretic behavior of concrete and reinforcing steel and the effect of shear stress transfer, both, inside the beam-column joint and girder inelastic region and across discrete cracks running through the depth of the member.

2 FORMULATION OF THE MODEL

In this study a rational model of the hysteretic behavior of inelastic regions in RC moment resisting frames is developed. The model accounts for the hysteretic behavior of reinforcing steel and concrete, the cyclic bond deterioration and the transfer of shear within each critical region. The model does not, presently, include the shear transfer across cracks running through the depth of the member.

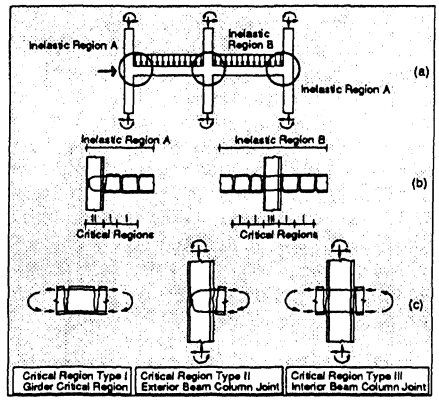

Figure 1. Reinforced concrete inelastic regions
(a) Forces at lower story of moment resisting frame
(b) Subdivision of inelastic region in critical regions
(c) Critical region types I, II and III

In the proposed model each inelastic region is subdivided into elements or slices called critical regions at locations where cracks form. In the presence of low shear stresses, cracks run almost vertically through the depth of reinforced concrete frame members. While well defined cracks are known to form at the beam-column interfaces of the joints (Viwathanatepa et al. 1979) cracks in girder inelastic regions are randomly spaced. To avoid the complications associated with the formation and location of cracks, attention is focused on the final cracking state of the member, when cracks have stabilized at a more or less regular spacing. It is, then, assumed that cracks are vertical, equally spaced and form at predetermined locations in girder inelastic regions.

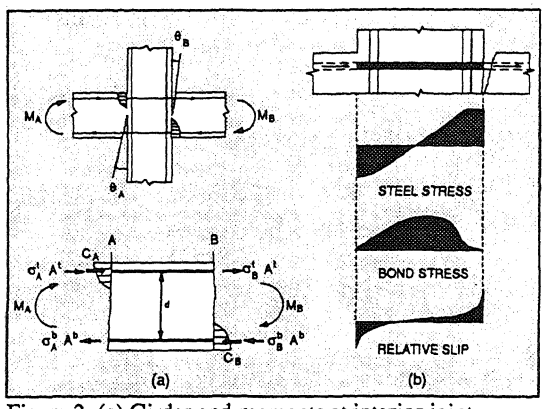

Figure 2. (a) Girder end moments at interior joint (b) Distribution of steel stress, bond stress and relative slip along the top reinforcing bar.

The subdivision of each inelastic region into critical regions is shown in Figure 1 for a typical lower story of a reinforced concrete moment resisting frame. Each inelastic region consists of several critical regions of one or more types. Thus, inelastic region A is composed of an exterior beam-column joint (Critical Region Type II) and two girder critical regions (Critical Region Type I), while inelastic region B consists of an interior beam-column joint (Critical Region Type III) and four girder critical regions (Critical Region Type I).

After subdividing each inelastic region of the frame into critical regions the inelastic response is determined by following a step-by-step procedure based on the flexibility method. The bending moments at the cracked end sections of each critical region are determined from the moments at the ends of the member by satisfying equilibrium. The bending moments at the end sections of each critical region are resisted by the concrete in compression and the reinforcing steel. The stress in the top and bottom reinforcing bars is partially transferred to the concrete within the region through bond. This process is accompanied by the relative elongation of the top and bottom reinforcing bars with respect to concrete which manifests itself as bar pull-out at the cracks. The pull-out of the top and bottom reinforcing bars is used to calculate the relative rotation at the cracks. Most of the rotation of each critical region can be attributed to this effect with a small contribution coming from the deformation of the concrete within the region. The rotations of all critical regions are then added to obtain the relative rotation at the ends of the member. At the same time the flexibility of the member is updated by summing up the flexibility matrices of the critical regions. The member flexibility matrix is then inverted to obtain the stiffness. If the stiffness has changed during the load step, the end moments which correspond to the new member rotations are not equal to the moments at the beginning of the step and an unbalance results. This unbalance is removed by an iterative solution scheme.

The behavior of each critical region depends on two basic mechanisms which are interrelated: the stress transfer from reinforcing steel to concrete through bond and the equilibrium of forces and moments at the cracked end sections. In order to illustrate the proposed solution process an interior joint is used as an example.

The interior joint is subjected to girder end moments M_A and M_B at the cracked end sections A and B, respectively, as shown in Figure 2. In this case the location of the cracked end sections is readily established, since well defined cracks are known to form at the beam-column interface of joints. With the forces acting at sections A and B, as shown in Figure 2a, the equilibrium of horizontal forces at section A is given by

$$\sigma_A^t A^t + \sigma_A^b A^b + C_A = 0 \tag{1}$$

while the equilibrium of bending moments about the centroid of the bottom reinforcing layer yields

$$\sigma_A^t A^t d + M_{CA} = M_A \tag{2}$$

Similarly, the force and moment equilibrium at end section B yield the following equations:

$$\sigma_B^t A^t + \sigma_B^b A^b + C_B = 0 \tag{3}$$

$$\sigma_B^t A^t d + M_{CB} = M_B \tag{4}$$

In Eqs. 1-4 a superscript denotes top or bottom reinforcing layer and a subscript designates the end section. d is the distance between the centroid of the top and bottom reinforcing layer, A is the area of the reinforcing layer and σ is the steel stress. C_A and C_B are the concrete compressive forces, while M_{CA} and M_{CB} are the moments of the concrete compressive stresses about the centroid of the bottom reinforcing layer.

To satisfy the four equilibrium equations (Eqs. 1-4) it is possible to use the steel strain values in sections A and B as basic unknowns. In this case there are four unknowns, the steel strains at the top and bottom reinforcing layer at sections A and B, which can be determined from the four available equations. There are, however, two problems with this solution approach. First, the contribution of concrete to the equilibrium of forces and moments depends on the strain distribution. While it is reasonable to assume that plane sections remain plane at an uncracked RC section, such an approximation does not hold true at a cracked section. In addition, the concrete contribution to the section equilibrium reduces to zero at the moment that the crack opens. Since the process of crack opening and closing is related to the relative elongation of reinforcing steel with respect to the surrounding concrete, it is not reasonable to relate crack opening and closing to the steel strains. In order to assess the state of the crack in a realistic way the transfer of steel stresses from section A to section B needs to be established, since this will yield the relative slip of the reinforcing steel with respect to concrete. Another problem with the solution approach of using the strains at the top and bottom reinforcing steel at sections A and B as the only unknowns derives from the fact that in this case Eqs. 1 and 2 are rendered independent from Eqs. 3 and 4. This lack of interaction between sections A and B is a reasonable approximation of the actual behavior, if sections A and B are far apart and concrete bond is relatively intact in the region between them. Neither fact holds true in critical regions of reinforced concrete frames which are subjected to severe cyclic load reversals and experience considerable cyclic bond deterioration.

It becomes clear from this discussion that Eqs. 1-4 do not suffice to describe the hysteretic behavior of critical regions in RC frames which are subjected to severe cyclic load reversals, since concrete bond in the region between sections A and B may be severely damaged. In this case the equilibrium of forces and moments at sections A and B also depends on the stress transfer from reinforcing steel to concrete through bond in the region between sections A and B. This is, particularly, true in interior beam-column joints.

The proposed model addresses the problem of stress transfer from reinforcing steel to concrete through bond and the associated interaction between the forces and moments of sections A and B in Figure 2. In this case the four equilibrium equations (Eqs. 1-4) cannot be solved independently, since the stress σ_A' in the top reinforcing steel at section A is related to the stress σ_B' at end section B and the same holds true for the stresses in the bottom reinforcing steel. The stress transfer problem adds two equations for each reinforcing layer, so that eight coupled nonlinear equations result. Instead of solving the eight nonlinear equations simultaneously an iterative solution approach is adopted in this study. This approach has the advantage that the stress transfer problem is solved separately from the equilibrium equations, so that different solution strategies which are best suited to each case can be used.

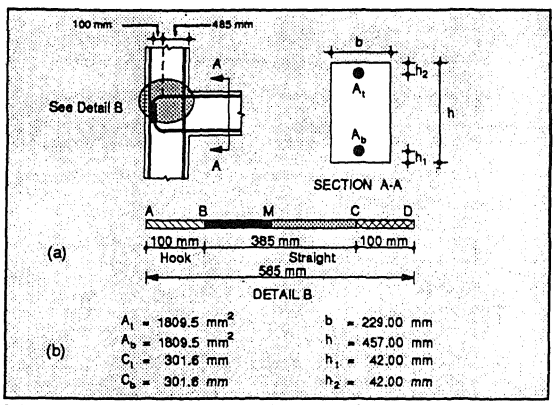

Figure 3. (a) Subdivision of reinforcing bars (b) Section dimensions and details of idealized top and bottom reinforcing layer.

The solution of the stress transfer problem along each reinforcing layer is accomplished by assuming a piecewise linear bond stress distribution between a few control points. The integration of bond stresses between two adjacent cracks yields the steel stress distribution. After obtaining the steel strains from the corresponding stresses the relative slip of the reinforcing bar between two adjacent cracks can be determined by integration of the steel strains. Since the bond stresses at the control points depend on the relative slip between reinforcing steel and concrete at these points, the bond stress distribution which satisfies compatibility, equilibrium and the hysteretic material laws of steel, concrete and bond is found by successive iterations.

3 APPLICATIONS

A number of correlation studies of the hysteretic behavior of interior and exterior beam-column joints, plastic hinge regions and entire beam-column subassemblages under cyclic load reversals are used to test the validity of the proposed model. A few examples are provided below. A very extensive series of correlation studies is presented elsewhere (Zulfiqar and Filippou 1990).

3.1 Exterior beam column joint

The first specimen is an exterior beam-column joint subassembly designed according to the New Zealand Code of practice NZS-3101 (Milburn 1982). In Unit #3 four #8 bars were used as top and bottom beam reinforcement. #2 ties spaced at 100 mm center to center were used as horizontal stirrups in the joint core region and #2 ties spaced at 90 mm center to center were used in the beam inelastic region. The amount of joint shear reinforcement and the presence of the beam stub which provided sufficient anchorage length for the beam flexural reinforcement and also increased the shear resistance of the joint core concrete prevented significant joint shear deformations.

The exterior joint is modeled as shown in Figure 3. An equivalent top and bottom reinforcing layer is derived and the 90° hook of the bars is represented by an equivalent straight portion with modified bond stress-slip relation (Zulfiqar and Filippou 1990). The subdivision of the top and bottom reinforcing bars and the geometry of the model is shown in Figure 3.

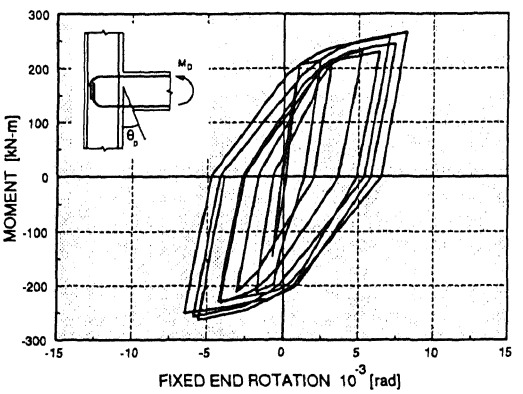

Figure 4. End moment-fixed end rotation relation at the beam-column interface.

The analytical end moment-fixed end rotation relation is shown in Figure 4. The hysteretic behavior is quite stable and the loops show little pinching. Figure 5 shows the steel strain distributions along the top and bottom reinforcing layers for three points of the moment-rotation history. The measured strains are also shown in Figure 5. Very satisfactory agreement between model and measurements is observed.

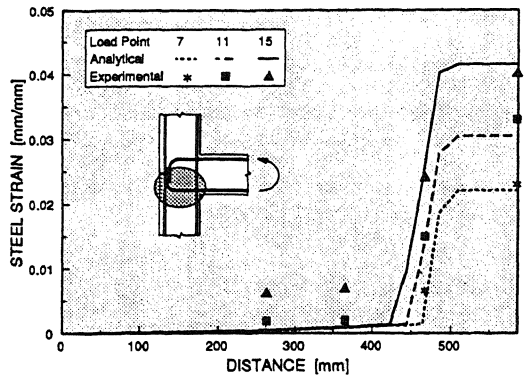

(a) Bottom bars in tension

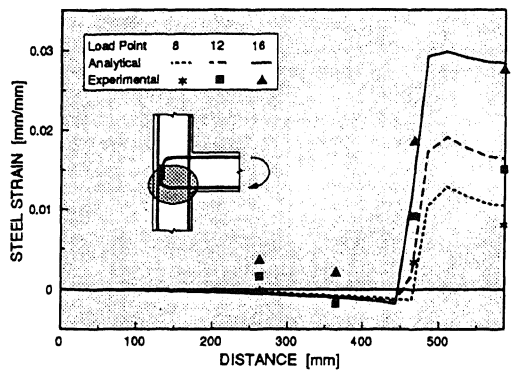

(b) Bottom bars in compression

Figure 5. Distribution of steel strain along the reinforcing bars in the joint.

3.2 Interior beam column joint

The second selected specimen is an interior beam-column joint subassemblage representing a two third scale model of part of the lower story of a typical reinforced concrete moment resisting frame building of 10 to 15 stories height (Beckingsale 1980).

The geometry and reinforcement details of specimen B13 were established so as to ensure that the columns remain elastic and inelastic deformations concentrate at the ends of the girders and in the beam-column joint. The specimen consists of two 356 mm by 610 mm beams and a 457 mm by 457 mm column. The beam was symmetrically reinforced with six D19 (#6) bars in the top and bottom arranged in two layers. The anchorage length of the girder reinforcing bars passing through the joint was 457 mm, which corresponds to about 24 d_b. The column was subjected to an axial load of $0.50f'_cA_g$ and R12.7 (#3) bars spaced at 76 mm were used as horizontal shear reinforcement in the beam-column joint. The high axial load and the sufficient amount of shear reinforcement limited the extent of joint cracking and kept joint shear deformations small.

The interior joint is modeled as shown in Figure 6, which shows the subdivision of the top and bottom reinforcing bars and the geometry of the model. An equivalent top and bottom reinforcing layer is derived (Zulfiqar and Filippou 1990).

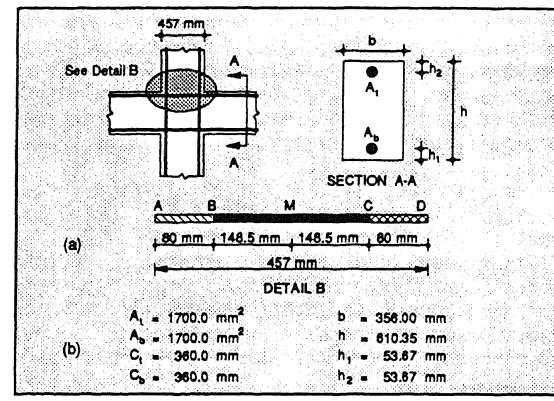

Figure 6. (a) Subdivision of reinforcing bars (b) Section dimensions and details of idealized reinforcing layers

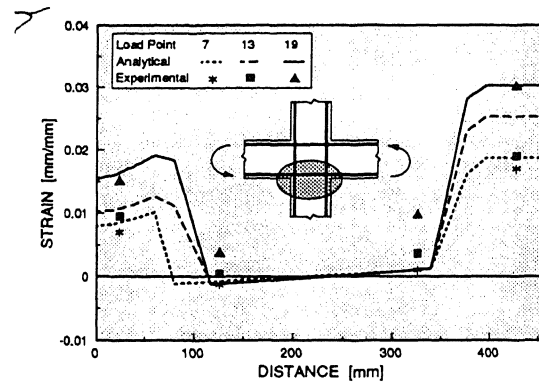

(a) Bottom reinforcing layer

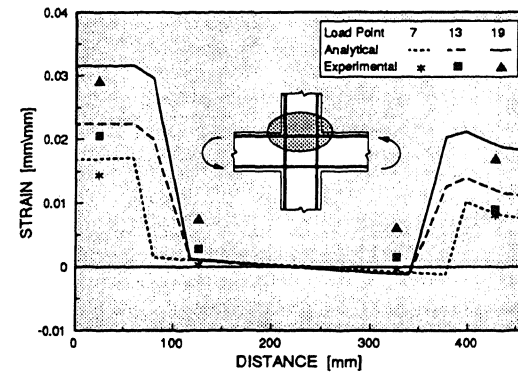

(b) Top reinforcing layer

Figure 7. Distribution of steel strain along the reinforcing bars in the joint

Figure 7 shows the steel strain distributions along the top and bottom reinforcing layers for three points of the moment-rotation history. The measured strains are also shown in Figure 7. Very satisfactory agreement between model and measurements is observed.

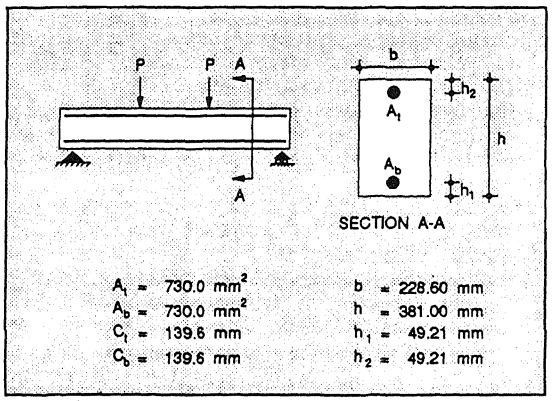

Figure 8. Section dimensions and details of idealized top and bottom reinforcing layer

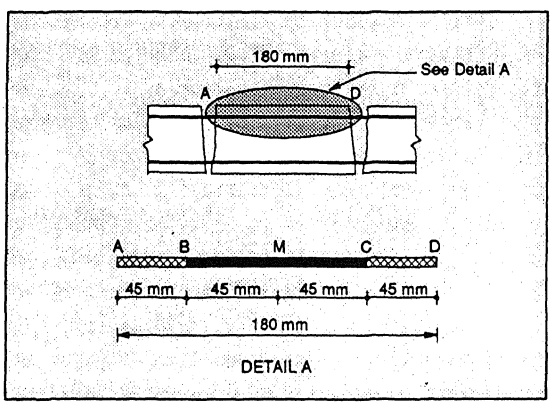

Figure 9. Subdivision of reinforcing bars

3.2 Beam inelastic region

The third selected specimen is a simply supported beam under two point cyclic loading (Bertero et al. 1969). Specimen #4 was a 13 ft. 2 in. long beam with a rectangular cross section measuring 9 in. by 15 in and was reinforced with 2 #7 reinforcing bars at the top and bottom. In the constant moment region between the load application points #2 ties at 6 in. on center provided confinement and prevented buckling of the reinforcing bars under compression. The section dimension and model details are shown in Figures 8 and 9.

The subdivision of the top and bottom reinforcing bars is shown in Figure 9. The length of the girder critical region is set equal to 7 in. (180 mm) based on the recorded crack spacing of the test specimen. The length of regions AB and CD where gradual spalling of the concrete cover takes place is equal to 45 mm which is 1.5 times the clear cover of 30 mm. The confined region BC is divided by point M into two segments of equal length.

The analytical moment-average curvature relation over the measurement length of 180 mm is shown in Figure 10. Figure 11 shows the steel strain distributions along the top reinforcing layer for three points of the moment-rotation history. The measured strains are also shown in Figure 11. Very satisfactory agreement between model and measurements is observed.

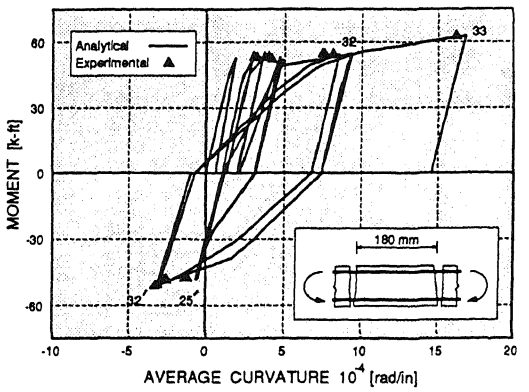

Figure 10. Comparison of experimental with analytical moment-average curvature relation over 180 mm girder length

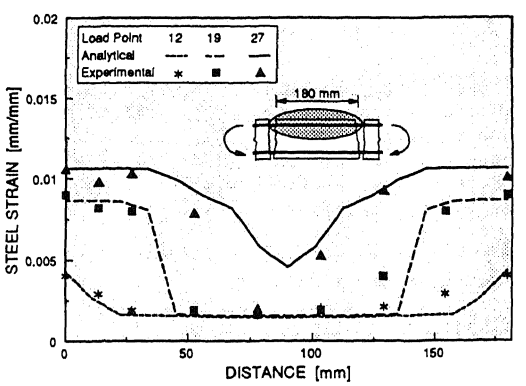

Figure 11. Distribution of steel strain along the top reinforcing layer

3.4 Dynamic response of multistory frames

The effect of models of the hysteretic behavior of inelastic regions on the overall response of well designed frames depends on the characteristics of the earthquake ground motion and on model parameters. Preliminary results with frame models (Filippou and Issa 1988) indicate that the overall response of a multistory frame may not be very sensitive to model selection, as long as the model parameters are selected consistently. It is this consistent selection of model parameters that is very difficult in empirical frame models. The model proposed in this study is based on the material properties and the geometry of the members of interest and can thus help in the rational selection of parameters of simple frame models, which can be economically used in the seismic response analysis of multistory frames. The example of such an analysis of a six story frame which is subjected to a ground motion from the 1977 Bucarest earthquake is shown in Figure 12. It can be seen that the inclusion of the fixed-end rotations between girder and joint does not seem to significantly affect the maximum displacement at the roof of the structure.

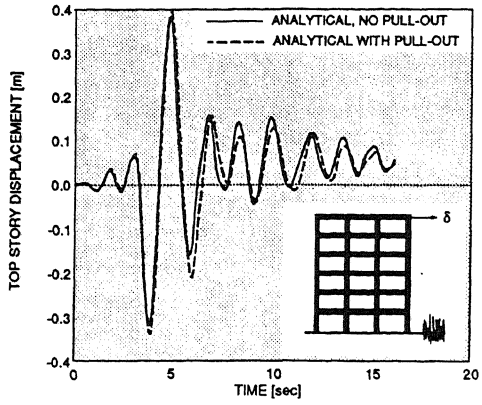

Figure 12. Time history of roof displacement of six story RC moment resisting frame subjected to 1977 Bucarest earthquake.

4 CONCLUSIONS

In this paper a rational model of the hysteretic behavior of inelastic regions in reinforced concrete moment resisting frames is proposed. The model is validated by comparing analytical results with experimental measurements from interior and exterior beam-column joints and girder inelastic regions.

From the correlation studies between analytical and experimental results it is concluded that the proposed model is capable of describing with sufficient accuracy the global and local behavior of interior and exterior beam-column joints provided that the joint shear stress does not exced the values specified in Chapter 21 of American Concrete Institute Building Code 318-89. The comparison of the analytical moment-fixed end rotation relation of beam-column joints with experimental evidence indicates that the model predicts satisfactorily the hysteretic joint behavior, particularly, the strength, stiffness and energy dissipation capacity of the joint. At the same time the distribution of strains along the reinforcing bars anchored in the joint agrees very well with measured values.

Further studies are required to assess the effect of models of the hysteretic behavior of inelastic regions on the global and local response of reinforced concrete moment resisting frames.

5 ACKNOWLEDGEMENTS

This study was supported by Grant No. ECE-8657525 from the National Science Foundation. This support is gratefully acknowledged. Any opinions expressed in this report are those of the authors and do not reflect the views of the sponsoring agency.

REFERENCES

Beckingsale, C.W. (1980). Post elastic behavior of reinforced concrete beam-column joints. *Research Report 80-20,* University of Canterbury, New Zealand.

Bertero, V.V., Bresler, B., and Liao, H. (1969). Stiffness degradation of reinforced concrete members subjected to cyclic flexural moments. *Report No. EERC 69-12,* University of California, Berkeley.

Filippou, F.C. and Issa, A. (1988) Nonlinear analysis of reinforced concrete frames under cyclic load reversals. *Report No. UCB/EERC-90/06,* University of California, Berkeley.

Milburn, J.R. (1982). Behavior of beam-column joints designed to NZS3101. *Research Report 82-7,* University of Canterbury, 1982.

Viwathanatepa, S., Popov, E.P. and Bertero, V.V. (1979). Seismic behavior of reinforced concrete interior beam-column subassemblages. *Report No. UCB/EERC-79/14,* University of California, Berkeley.

Zulfiqar, N. and Filippou, F.C. (1990). Models of critical regions in reinforced concrete frames under earthquake excitations. *Report No. UCB/EERC-90/06,* University of California, Berkeley.