*Earthquake Engineering, Tenth World Conference © 1994 Balkema, Rotterdam. ISBN 90 5410 060 5*

# Simulated seismic load tests on reinforced concrete elements and structures

R. Park
*University of Canterbury, New Zealand*

ABSTRACT: The use of quasi-static cyclic loading tests to assess the performance of structural elements and subassemblages when subjected to severe earthquake loading is discussed. Results obtained from quasi-static cyclic loading tests conducted on reinforced concrete elements and structures at the University of Canterbury during the last five years are presented. The research projects involved columns of building frames and bridge piers, beam-column joints of moment resisting building frames, high strength concrete and reinforcing steel, strut and tie models for structural walls, precast concrete elements in building frames, and retrofitting of existing building and bridge columns.

## 1 INTRODUCTION

Although analytical finite element procedures have become highly developed in recent years, there is still a great need for experimental testing of reinforced concrete structural elements and subassemblages, to establish their behaviour when subjected to simulated severe earthquake loading. Aspects of behaviour of interest in seismic design are stiffness, strength, ductility, energy dissipation, change of these characteristics and damage with cyclic loading, and retrofitting and repairability of undamaged and damaged structures. Most of these aspects cannot be determined with complete confidence by analytical procedures, and need to be assessed by experimental methods.

## 2 TYPES OF TESTING

Shake table testing, with the table following the motions of a recorded earthquake, is the most realistic experimental method for assessing the performance of structural systems. However, because of the high cost of large shake table systems, often only scale models can be tested. Scaling of the earthquake record may also be necessary. In addition there are difficulties with and high costs of equipment used for recording dynamic behaviour during the short duration of the testing. Also, visual observation of performance during testing is not easy.

Pseudodynamic testing is an alternative which retains some of the realism of shake table testing. In pseudodynamic testing, experimental feedback of the restoring forces of the structure at each time step during testing is used to calculate by inelastic dynamic computer analysis the displacements to be imposed on the structure by hydraulic actuators to resemble those occurring during an earthquake.

However, most experimental testing of structural elements and subassemblages has used quasi-static cyclic loading, applied by hydraulic actuators, which has not attempted to follow the strain rate or the specific displacement history imposed by a particular earthquake. Instead the structural element or subassemblage is subjected to predetermined numbers of displacement controlled quasi-static loading cycles to predetermined displacement ductility factors or drifts. Time-history analyses of code-designed structures responding inelastically to major earthquakes can be used to obtain a guide as to the quasi-static loading history to be applied (Park, 1988). The slow strain rate means that the test may take several hours or days to conduct. Quasi-static cyclic load testing gives conservative estimates of the real strength of the structural element or subassemblage, since earthquake loads are dynamic and an increase in the strain rate generally results in an increase in the strength and stiffness of concrete and steel. However, the shapes of the load-displacement hysteresis loops obtained from quasi-static and dynamic loading tests may be very similar (Dodd and Cooke, 1991). There is evidence that the increase in yield strength of steel due to high strain rate diminishes and tends towards the static load strength during cyclic excursions into the yield range.

Quasi-static cyclic loading tests have the major

advantages of requiring far less complicated loading and recording equipment, and giving more time to observe the performance of the test specimens, than shake table or pseudodynamic testing. Much useful information can be obtained from quasi-static loading tests at modest cost.

## 3 QUASI-STATIC CYCLIC LOADING HISTORIES

In quasi-static cyclic load testing, generally the applied displacement history does not follow the complex response of a structure to an actual earthquake. Instead a more simple displacement history is applied to enable an assessment to be made as to whether the structure is tough enough to be likely to perform satisfactorily during a severe earthquake.

A quasi-static cyclic loading history that has been used for many years at the University of Canterbury, New Zealand, is shown in Fig. 1 (Park 1988, Park 1989). The first load cycle to 0.75 of the theoretical ultimate load $H_u$ is load controlled. The yield displacement is found using the mean measured stiffness at $0.75H_u$ extrapolated to $H_u$ as shown in the figure. The subsequent load cycles in the inelastic range are displacement controlled. The displacement ductility level, $\mu = \Delta/\Delta_y$ where $\Delta$ is the maximum imposed displacement, is increased step-wise. Generally two symmetrical loading cycles have been applied to the ductility levels $\mu = \pm 2, \pm 4, = 6$, etc. Sometimes the ductility levels have been increased more gradually in steps of two cycles to $\mu = \pm 1, \pm 2, \pm 3$, etc, if limited ductility is expected.

A more detailed quasi-static cyclic loading history used for seismic load tests involving bi-directional earthquake loading was agreed to by the principal investigators of the United States-New Zealand-Japan-China collaborative research project on the seismic design of reinforced concrete beam-column joints (American Concrete Institute, 1991). The yield displacement is determined by the method shown in Fig. 1. The displacement controlled cyclic loading history imposed is illustrated in Fig. 2 for the first 12 cycles. Obtaining that international agreement was a major step forward and has permitted proper comparison of the performance of the structural subassemblages tested in the four countries in that collaborative research programme.

The commentary of the New Zealand general structural design and loadings code (Standards Association of New Zealand, 1992) suggests a performance criterion for adequate ductility. The yield displacement $\Delta_y$ is defined at the horizontal displacement of the structure behaving elastically when subjected to the design seismic forces. The criterion is that the structure should be capable of undergoing four cycles of horizontal displacements to $\pm 1.25\mu\Delta_y$ without the horizontal load carrying capacity reducing by more than 20%, where $\mu$ is the required displacement ductility factor.

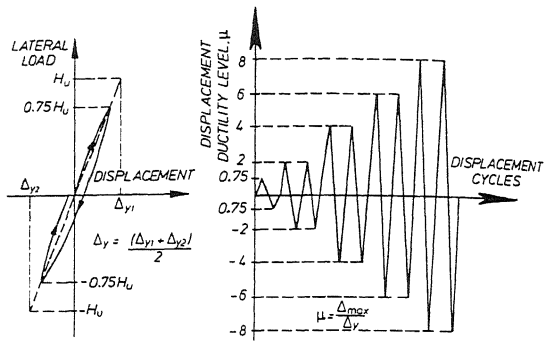


(a) Experimental definition of yield displacement

(b) Imposed displacement history

Figure 1. Displacement history used for quasi-static cyclic loading tests at the University of Canterbury.

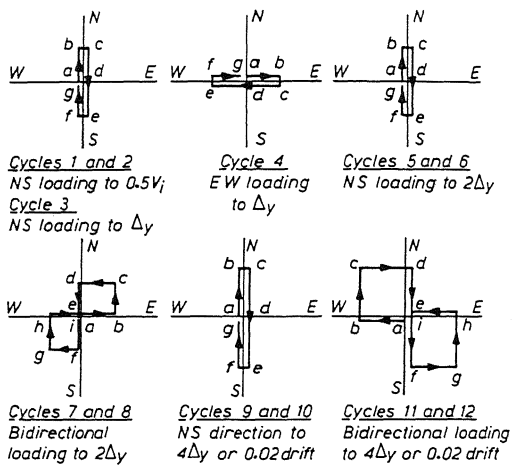


Figure 2. Bi-directional displacement history used for quasi-static cyclic loading tests of a United States-New Zealand-Japan-China collaborative research project.

The above quasi-static loading histories may be suitable for earthquakes of typical duration. For a long duration earthquake more loading cycles at each ductility level would be necessary.

Some investigators prefer to specify the imposed deformations in loading tests in terms of the interstorey displacement rather than the displacement ductility factor. The interstorey displacement $\Delta$ is normally written in nondimensional terms by dividing by the storey height $\ell_c$ to obtain the interstorey drift $\Delta/\ell_c$. The concept of using interstorey drifts has merit since it avoids the

difficulty of defining the yield displacement. However, the level of interstorey drift imposed should depend on the stiffness of the structure and the required ductility level. Ideally, all hysteretic load-displacement responses obtained from experimental tests should show both the displacement ductility factor and the interstorey drift.

## 4 REINFORCED CONCRETE COLUMNS OF BUILDING FRAMES AND BRIDGE PIERS

### 4.1 Loading arrangements for columns

Some loading arrangements for quasi-static cyclic lateral loading tests conducted on columns are shown in Figs. 3, 4 and 5.

For the loading arrangement shown in Fig. 3a, the column unit has a central stub to simulate the presence of either a beam, footing or cap. The column is tested under axial compression applied by a large capacity testing machine and reversible quasi-static lateral loading is applied to the stub by a hydraulic jack acting through a loading frame attached by pins to the ends of the column unit. The critical regions are in the column adjacent to, and above and below, the central stub. This test rig is simple, but a disadvantage is that rotation of the stub may occur during testing, due to a greater concentration of plastic hinge rotation either above or below the stub, which has to be taken into account when determining the "real lateral displacement" of each half length of column unit. This can be achieved by adding to or subtracting from the measured lateral displacement $\Delta$ of the central stub a quantity $\theta\ell$, where $\theta$ is the measured rotation of the stub and $\ell$ is the distance from the centre of the stub to the pin at the end of the column (see Fig.3b). The real maximum imposed displacement ductility factor can be calculated from $\mu_r = (\Delta + \theta\ell)/\Delta_y$.

For the loading arrangement shown in Fig. 4 the column unit is continuous with a base block. The column is tested under axial compression applied by a large capacity testing machine and reversible quasi-static lateral loading is applied by a hydraulic jack acting through a loading frame attached to the column base block. This test rig has the advantage that plastic hinge rotation occurs in the column in only one region.

For the loading arrangement shown in Fig. 5 the

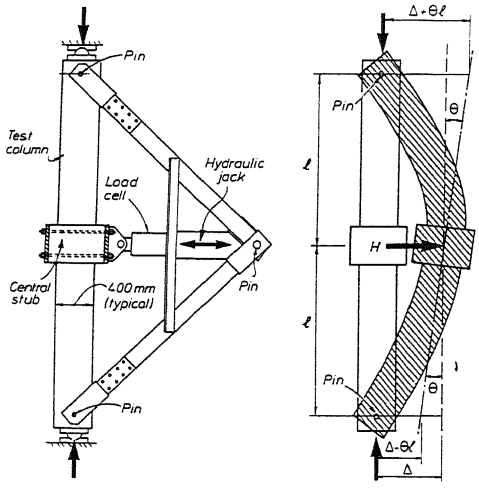


(a) Applied loading (b) Effect of rotation of central stub

Figure 3. Loading arrangements for quasi-static cyclic lateral loading tests on column with central stub within a testing machine.

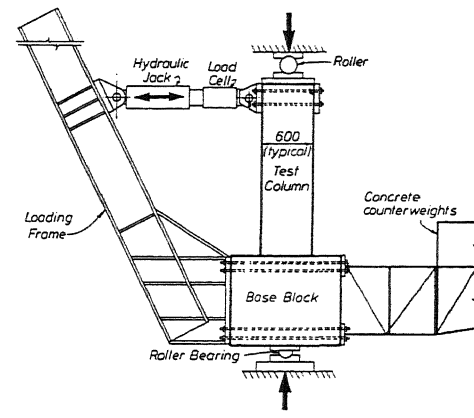


Figure 4. Loading arrangements for quasi-static cyclic lateral loading tests on column canterlevering from base block within a testing machine.

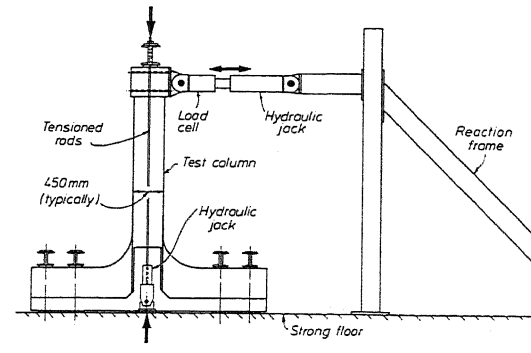


Figure 5. Loading arrangement for quasi-static cyclic lateral loading tests on column attached to laboratory strong floor.

column unit is continuous with a base block which is attached to a strong floor. The column is tested under axial compression applied by tensioned steel rods and reversible quasi-static lateral loading is applied by a hydraulic jack acting through a reaction frame attached to the strong floor. This rig does not require a large capacity testing machine.

### 4.2 Tests on columns

Recent research at the University of Canterbury has resulted in a refined approach for the determination of the quantity of transverse confining reinforcement required for concrete confinement in columns to ensure adequate ductility. The derivation was based on stress-strain relationships for compressed concrete confined by various quantities and arrangements of transverse reinforcement, previously obtained from experimental tests and analysis (Mander, Priestley and Park, 1988). The stress-strain relations were used in cyclic moment-curvature analyses of a range of reinforced concrete columns to derive design charts for the available curvature ductility factor $\phi_u/\phi_y$ of reinforced concrete columns (Zahn, Park and Priestley, 1986). The yield curvature $\phi_y$ was defined in a similar manner as for the yield displacement in Fig. 1. The ultimate curvature $\phi_u$ was defined as that curvature when, after four cycles of imposed bending moment to that curvature in each direction, either the moment of resistance has reduced by 20%, or the tensile strain in the transverse reinforcement has reached a limiting value, or the tensile strain in the longitudinal reinforcement has reached a limiting value, or the compression strain in the longitudinal reinforcement has attained a limiting value where significant buckling occurs, whichever is least. The design charts include the influence of the longitudinal reinforcement and the axial load level, as well as the variables traditionally included by codes in confinement equations.

Refined design equations to determine the quantities of transverse reinforcement required for specified ductility levels were derived by Watson and Park (1989) on the basis of the above design charts. The requirements of the refined design equations to achieve $\phi_u/\phi_y$ of 10 and 20 are compared with the current requirements of the ACI building code (American Concrete Institute, 1989) and the New Zealand concrete design code (Standards Association of New Zealand, 1982) in Fig. 6. In the figure $A_{sh}$ = effective area of transverse bars in direction under consideration within spacing $s_h$, $s_h$ = centre to centre spacing of transverse bar sets, $b_c$ = width of concrete core of column, $A_g$ = gross area of column, P = compressive load on column, $f_c'$ = compressive cylinder strength of concrete, $f_y$ = yield strength of longitudinal steel reinforcement and $f_{yh}$ = yield strength of transverse steel reinforcement.

Quasi-static cyclic loading tests were conducted on eleven reinforced concrete columns to check the above analytical approach for determining the available ductility of a range of columns (Watson and Park, 1989). The columns had a 400 mm square or octagonal cross sections (see Fig. 7a) and contained longitudinal reinforcement and various quantities of transverse reinforcement. The columns were subjected to either low, moderate or high axial compressive loads ($P/f_c'A_g$ = 0.1, 0.3, 0.5 or 0.7) and to reversible quasi-static lateral loads H which simulated the effects of severe earthquake loading. Some measured lateral load-lateral displacement hysteresis loops are shown in Fig. 7b and c.

The experimental results obtained from the columns confirmed that the current ACI building code and New Zealand concrete design code recommend more transverse reinforcement for concrete confinement than is necessary at low axial load levels. However, at high axial load levels the ACI building code recommends too little transverse reinforcement.

To obtain the available plastic hinge rotations from ultimate curvatures, the equivalent plastic hinge length $\ell_p$ of members is required (Park and Paulay, 1975). However, $\ell_p$ is not simply a representation of the distribution of curvature due to flexure, but also includes the effect of diagonal tension cracking and bond slip. Therefore, the theoretical determination of $\ell_p$ is difficult. Hence $\ell_p$ needs to be found by experimental testing, as it has been in several investigations (for example, Priestley and Park, 1987).

### 4.3 Interlocking spirals

Fig. 8 shows a column with two interlocking spirals. Such a column requires less transverse reinforcement

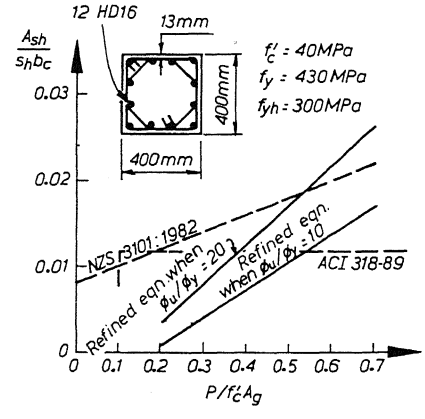


Figure 6. Comparison of quantities of transverse reinforcement for concrete confinement required by NZ and ACI codes and the refined design equation.

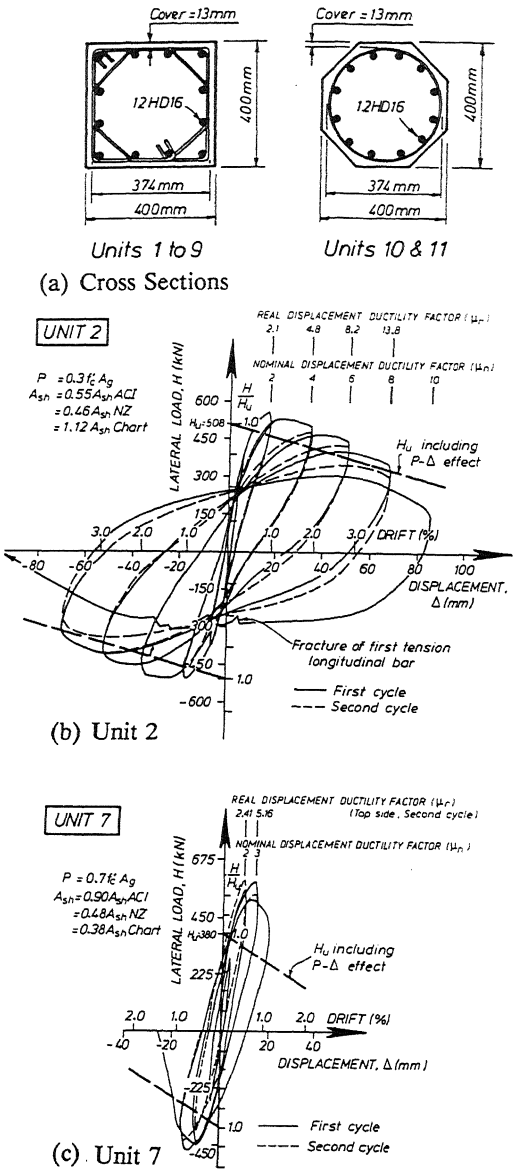


Figure 7. Cross sections and some measured lateral load-lateral displacement hysteresis loops of columns tested by Watson and Park, 1989.

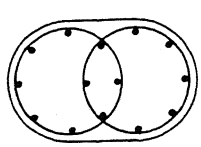

Figure 8. Section of a column with two interlocking spirals and longitudinal reinforcement.

than an equivalent column with rectangular hoops and cross ties, and is easier to construct due to the absence of cross ties. Various arrangements of interlocking spirals in bridge columns are being widely used by the State of California (Caltrans, 1990). However, it appears that no experimental studies have been conducted in the past to evaluate the effectiveness of interlocking spirals. The current Caltrans design provisions are extrapolations of the behaviour of columns with single spirals.

An experimental research programme (Tanaka and Park, 1992), involving tests on columns with two interlocking spirals, has recently confirmed the excellent behaviour of such columns during quasi-static cyclic loading if properly designed. The spirals need to have a reasonable area of overlap and to have sufficient longitudinal reinforcing bars in that area to provide proper interlock.

## 5 REINFORCED CONCRETE BEAM-COLUMN JOINTS OF MOMENT RESISTING BUILDING FRAMES

### 5.1 Loading arrangements for beam-column joints

Quasi-static cyclic lateral loading can be applied to beam-column subassemblages using the arrangement shown in Fig. 9a which follows closely the actual horizontal displacements of a seismically loaded moment resisting frame. Alternatively, the arrangement shown in Fig. 9b can be used, where the beam ends are displaced rather than the column ends. If the columns are loaded axially in the test, the effect of P-Δ moments has to be separately added when the loading arrangement of Fig. 9b is used.

### 5.2 A collaborative research project

A United States-New Zealand-Japan-China collaborative research project on beam-column joints was conducted during the six year period 1984-89. This collaborative research project was initiated because there are a number of differences between the approaches used in various countries for the seismic design of reinforced concrete beam-column-slab joints in moment resisting frames of buildings. It was agreed by the principal investigators that the structural testing laboratories at the University of Texas at Austin, USA, the University of Canterbury, New Zealand, the University of Tokyo, Japan, and Tongji University and the Chinese Academy of Building Research, China, would each construct three basic reinforced concrete beam-column-slab subassemblages, designed according to the code procedure of their country, for testing under the same simulated seismic loading. The subassemblages would be of the following types:

- One-way interior beam-column-slab joint
- Two-way interior beam-column-slab joint
- Two-way exterior beam-column-slab joint

The tests were to check the models of behaviour used for shear and bond transfer in beam-column joints, and the extent of slab participation in the behaviour of the beam-column joints.

### 5.3 University of Canterbury tests

The three subassemblages constructed and tested at the University of Canterbury (Cheung, Paulay and Park, 1991) had overall dimensions of 3.8 m high, and a maximum of 3.7 m x 3.7 m in the horizontal directions. The column sections were about 600 mm square and the beam sections were about 500 mm x 440 mm. Fig. 10 shows the construction and testing of the two-way interior joint subassemblage.

In the tests the arrangement shown in Fig. 9b was used for convenience. No axial load was applied to the ends of the columns, this being the worst loading case for joint core shear and bond behaviour. The applied lateral loading followed that shown in Fig. 2.

Fig. 11 shows the measured horizontal force (storey shear) versus horizontal displacement (interstorey drift) in the east-west direction for the two-way interior beam-column joint. Plastic hinging occurred in the beams, as designed. The theoretical strengths based on measured material properties are also shown in Fig. 11, including some allowance for enhancement of the beam negative moment of resistance due to the participation of slab reinforcement. $V_i$ includes the contribution of tension reinforcement in the slab within four slab thicknesses each side of the column and $V_i^*$ includes the contribution of tension reinforcement in the slab over the entire slab width. The effects of strain hardening of steel are not included. It is evident that the experimental strengths reached $V_i^*$ at large displacements. Displacement ductility factors of at least $\mu = 8$ and inter-storey drifts of at least 3.5% of the storey height were obtained with negligible degradation of strength. The performance of all three subassemblages tested in New Zealand was excellent.

The performances observed in the above tests conducted by Cheung, Paulay and Park (1991), and other recent test results obtained by Park and Dai (1988), have indicated that some relaxation of the current New Zealand concrete design code provisions for beam-column joints would still lead to acceptable performance. Fig. 12 shows the mechanisms of shear resistance of beam-column joint cores adopted by the New Zealand concrete design code (Standards Association of New Zealand, 1982). It is proposed as a result of the above recent tests that the diagonal compression strut mechanism be allocated at least 30% of the total joint shear force. This could mean

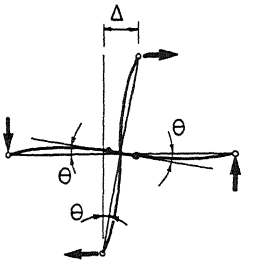


(a) Lateral loading causing displacements as in a frame

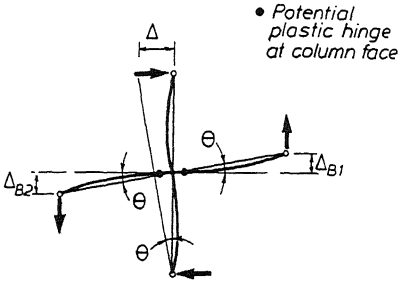


(b) Alternative method of lateral loading

Figure 9. Quasi-static loading of beam-column joint subassemblage.

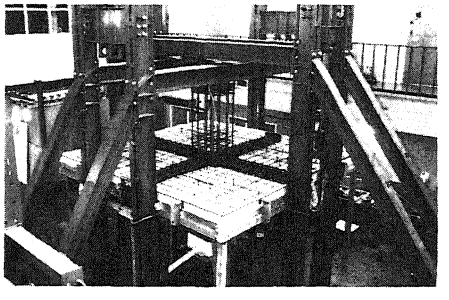

(a) During construction

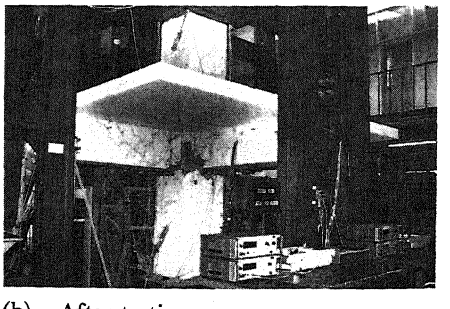

(b) After testing

Figure 10. Two-way interior beam-column-slab joint subassemblage at various stages.

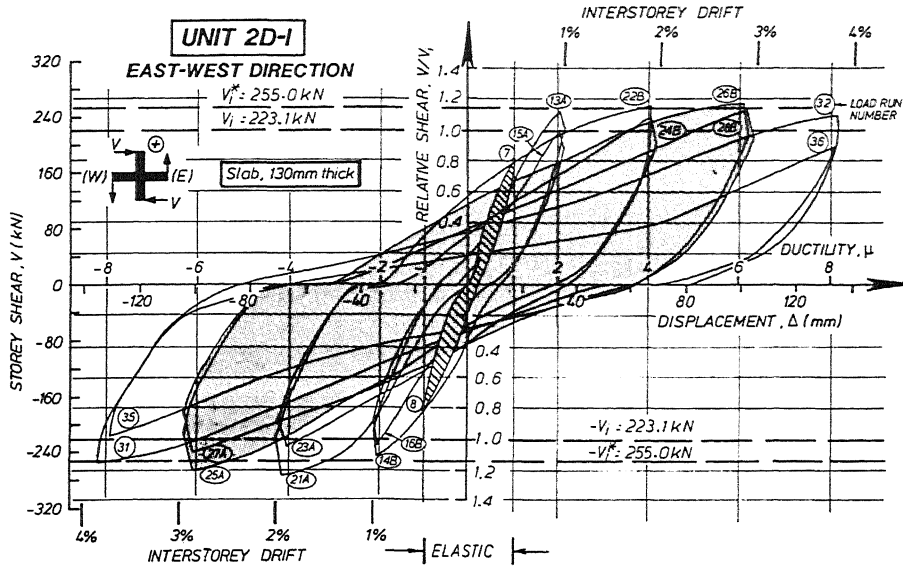


Figure 11. Measured horizontal storey shear versus horizontal interstorey displacement for two-way interior beam-column joint subassemblage.

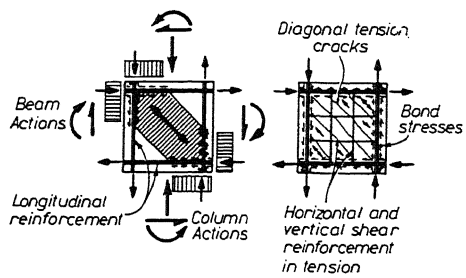


(a) Diagonal compression strut mechanism (b) Truss mechanism

Figure 12. Mechanisms of shear resistance of beam-column joint cores.

that about 30% less shear reinforcement would be required for beam-column joint cores than recommended by the current code. Also, it is proposed to permit the use of somewhat larger diameter longitudinal bars passing through joints. The permitted increase depends on several variables. In a typical case a 30% increase in bar diameter over current code is proposed. Also, it is proposed that the effective width of slab contributing to the negative moment flexural strength of an interior beam at a column be increased to one quarter of the beam span each side of the beam centre line.

One of the difficulties when comparing the experimental results obtained by the four countries of the United States-New Zealand-Japan-China collaborative research project was in defining "acceptable performance", in order to judge the results of all the test specimens. There are still differences in opinion between the countries regarding the quantity of transverse shear reinforcement required in beam-column joint cores, the limitation of diameters of longitudinal bars and other design issues, necessary to ensure "acceptable performance".

## 6 HIGH STRENGTH CONCRETE AND REINFORCING STEEL

### 6.1 Background

In many countries, concrete with compressive cylinder strengths $f_c'$ up to about 80 MPa can be made with locally obtainable materials. The addition of silica fume permits compressive strengths of 100 MPa or higher to be attained. Also, very high strength steel reinforcement is available in many countries. For example, reinforcing steel with a yield strength $f_y$ up to about 1300 MPa is now available in Japan. Figure 13 shows typical stress-strain curves for the ordinary strength reinforcing steel normally used in New Zealand and for very high strength Japanese reinforcing steel.

The New Zealand concrete design code (Standards Association of New Zealand, 1982) currently does not permit steel with a specified $f_y$ greater than 500 MPa to be used. Also, most design parameters in the New Zealand concrete design code were established through experimental and theoretical studies with

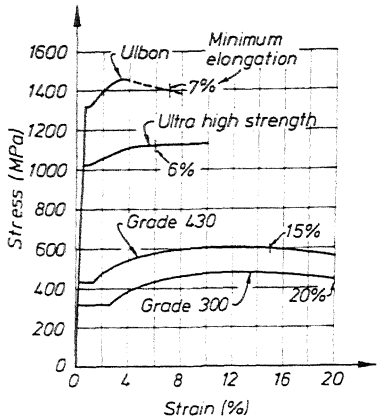


Figure 13. Typical stress-strain curves for New Zealand Grades 300 and 430 reinforcing steel and Japanese very high strength reinforcing steel.

concretes typically having $f'_c$ up to about 40 MPa. The New Zealand code does not permit a specified $f'_c$ greater than 55 MPa to be used in reinforced concrete structures designed for earthquake resistance. Therefore, many design provisions of the New Zealand code need to be reviewed to take into account the characteristics of high strength steel and concrete. Features of high strength concrete which particularly need to be investigated include the variation of bond strength with concrete compressive strength, the quantities of transverse reinforcement in the form of hoops or spirals required for adequate confinement of compressed concrete in critical regions, and the possible effects on shear strength of reduced aggregate interlock across cracks because of smoother crack faces. A feature of very high strength reinforcing steel which needs to be investigated is the attainable (usable) stress in the steel and the effect of the lower fracture strain. Many of these aspects of the use of high strength concrete and steel are currently being investigated by experimental studies being conducted at the University of Canterbury.

### 6.2 Tests on beam-column joints

In the design of moment resisting reinforced concrete frames, code limitations on the maximum diameter of longitudinal reinforcing bars and on the minimum depths of beams and columns are necessary to ensure adequate anchorage of the longitudinal reinforcement where passing through the cores of beam-column joints. A series of ten one-way beam-column joint subassemblages have been tested (Park and Dai, 1988; Xin, Park and Tanaka, 1992). The concrete compressive cylinder strength $f'_c$ ranged between 29 and 94 MPa. The steel reinforcement was either Grade 300 or 430. The quasi-static cyclic lateral loading was applied to the beam-column joint subassemblages using the arrangement shown in Fig. 9a. It was found that when plastic hinges formed in the beams at the column faces and high strength concrete was used, satisfactory ductile performance of the subassemblage could be obtained using larger diameter beam bars. That is, the permitted beam bar diameter to column depth ratio $d_b/h_c$ could be increased in proportion to $\sqrt{f'_c}$.

### 6.3 Tests on Columns

An obvious application of very high strength concrete is for columns, since its use means that columns with smaller cross sections or carrying higher loads can be designed resulting in more clear floor space in buildings. However, very high strength concrete, if not confined, tends to be much more brittle and to have less post-peak deformability than normal strength concrete. Hence in seismic design the presence of adequate quantities of transverse reinforcement for confinement is extremely important if ductile behaviour is required of columns. The smaller dilatation of high strength concrete at high compressive stresses means that current code provisions may not specify sufficient transverse reinforcement for concrete confinement in the potential plastic hinge regions of high strength concrete columns.

The use of very high strength transverse reinforcement is an attractive means of increasing the confining pressure and/or reducing the volume of transverse confining reinforcement, in columns. However, the upper limit of usable steel strength needs to be determined.

Five reinforced concrete columns, constructed from concrete with compressive strengths of 93 or 98 MPa, have been tested subjected to quasi-static cyclic lateral loading using the test arrangement shown in Fig. 3a (Li Bing, Park and Tanaka, 1991). The axial compressive load P applied was either $0.3f'_cA_g$ or $0.6f'_cA_g$. The transverse reinforcement was either New Zealand manufactured Grade 430 steel or Japanese manufactured Ulbon steel which had a yield strength $f_{yh}$ = 1317 MPa at the 0.2% offset strain. The quantity of transverse reinforcement in the columns was approximately that required by the New Zealand concrete design code (Standards Association of New Zealand, 1982), calculated using the actual measured steel and concrete strengths. An observed feature of the tests was the sudden and violent crushing and splintering of the cover concrete at a longitudinal strain of about 0.003. However, no transverse reinforcement fractured during the tests. While the columns with low axial load level achieved reasonable flexural ductilities, the columns with the high axial load level achieved very limited flexural

ductilities. High tensile stresses were not reliably achieved in the transverse confining steel. Therefore, the amount of transverse reinforcement required to achieve adequate flexural ductility of columns with high strength concrete needs further experimental investigation. In particular, more information is required from experimental tests to determine the passive confinement achievable from transverse reinforcement, and hence the application of very high strength confining reinforcement.

## 7 STRUT AND TIE MODELS FOR STRUCTURAL WALLS

### 7.1 Background

Strut and tie models have been used mainly in the design of regions of structures of reinforced concrete where, due to discontinuities of member shape or loading, the hypothesis of plane sections remaining plane does not hold. Strut and tie models permit the designer to follow the flow of forces in discontinuous regions. Reinforcement is provided for the tie forces.

Strut and tie models have not been widely used for the design of structures for earthquake loading. A possible difficulty is that cyclic (reversible) lateral loading causes the positions and the directions of the strut and tie forces to change with change in loading direction, which could result in degradation of strength of the structure, particularly at the nodes of the strut and tie forces, due to changing stress fields.

### 7.2 Tests on Walls with irregular openings

Six reinforced concrete walls of height 2.3 m, length 2.0 m and thickness 120 mm, modelling three storey structural walls, have been tested under quasi-static cyclic lateral loading at the University of Canterbury (Yanez, Park and Paulay, 1992). Fig. 14 shows one of

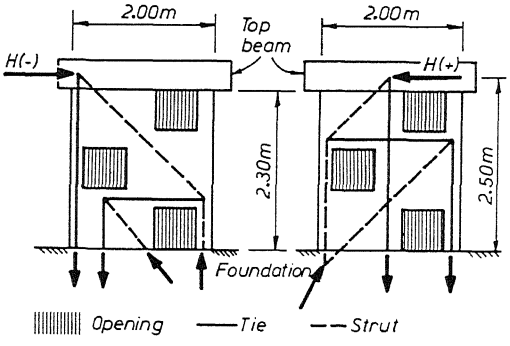


Figure 14. Model wall with irregular openings showing possible strut and tie models for lateral loading acting from the left and from the right.

the walls and the strut and tie models for lateral loading in each direction for which the reinforcement was designed. The tests showed that for walls with average longitudinal steel ratios of up to about 0.5%, strut and tie models predicted the lateral load strength with reasonable accuracy. All walls demonstrated ductile behaviour up to an interstorey of about 2%. It is evident that strut and tie models can be used for the seismic design of reinforced concrete walls with irregular openings.

## 8 PRECAST CONCRETE IN BUILDING FRAMES

### 8.1 Background

The seismic design and construction of moment resisting frames incorporating precast concrete elements requires satisfactory methods for connecting the precast elements together. If the connections between the precast elements are placed in potential plastic hinge regions, the design approach in New Zealand is to ensure that the behaviour of the connection region approaches that of a monolithic cast in place concrete structure. A number of possible arrangements of precast concrete members and cast in place concrete, forming ductile moment resisting multi-storey reinforced concrete frames, commonly used for strong column-weak beam designs in New Zealand, are shown in Fig. 15.

The current New Zealand concrete design code (Standards Association of New Zealand, 1982) has design provisions mainly for cast in place concrete construction. Many of the currently used details for connections between precast elements, at beam-column joints and at the mid-span of beams, go beyond the current code provisions and have had limited experimental verification.

### 8.2 Tests on cast in place connections between precast elements

Quasi-static cyclic lateral loading tests have been conducted at the University of Canterbury (Restrepo, Park and Buchanan, 1992) to determine the performance of cast in place mid-span connections between precast beam elements. The points of interest were the type of spliced connection of longitudinal beam bars (straight splice, hooked splice or diagonal reinforcement) and the distance of the splice from the column face. Quasi-static cyclic lateral loading tests have also been conducted on connections between beams and columns, to determine the performance of the hooked bar anchorage of the bottom bars of the beam in the cast in place concrete joint core in System 1 of Fig. 15, and the performance of the vertical column bars

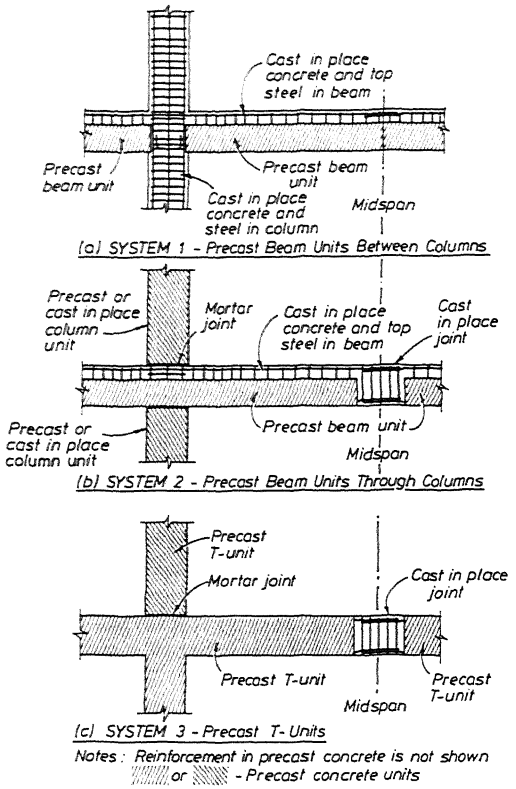


Figure 15. Arrangements of precast members and cast in place concrete for constructing moment resisting reinforced concrete frames.

which passed through vertical ducts in the precast beam and were grouted in System 2. The results of the experimental studies have led to design proposals for the New Zealand concrete design code.

## 9 RETROFITTING OF EXISTING REINFORCED CONCRETE BUILDING AND BRIDGE COLUMNS

### 9.1 Background

The assessment of the seismic risk of older structures, and retrofitting where necessary, is a very important topic for research. Typical early (before 1970) New Zealand reinforced concrete buildings with moment resisting frames normally have beams, columns and beam-column joints which lack sufficient transverse reinforcement for ductile behaviour of the structure. Also, the columns often have a significantly lower flexural strength than the beams, which would result in column sidesway mechanisms (soft storeys), which could lead to catastrophic collapse of taller buildings in a major earthquake. At the University of Canterbury experimental studies are currently being conducted, involving tests on poorly detailed critical regions of older buildings and bridges and investigations of retrofit methods.

### 9.2 Tests on Building Frame Subassemblages

Near full-scale replicas of portions of a 1950s designed 7-storey moment resisting frame have been tested at the University of Canterbury subjected to quasi-static lateral cyclic-loading to establish the performance of the frame as built and after retrofitting by jacketing with reinforced concrete (Rodriguez and Park, 1990).

Four column units were constructed with T-beam stubs, being almost full scale models of the as-built columns shown in Fig. 16. Two column units were tested and then retrofitted using the jackets of reinforced concrete shown for SS1 and SS4 in Fig. 17, and then retested. The other two were retrofitted before testing using the jackets of reinforced concrete shown for SS2 and SS3 in Fig. 17, and then tested. The retrofit was achieved by first roughening the surface of the existing concrete column by chipping to a depth of 2 or 3 mm. Also, in the case of the previously tested columns all loose concrete was removed. The new longitudinal reinforcement was passed through holes made in the floor slab. The new transverse reinforcing steel was placed around the existing columns, including in the region of the beam column-joint, which caused construction difficulties.

The arrangement for the quasi-static cyclic lateral loading was as shown in Fig. 5. The tests on the as-built columns indicated that, because of the very small quantity of transverse reinforcement present,

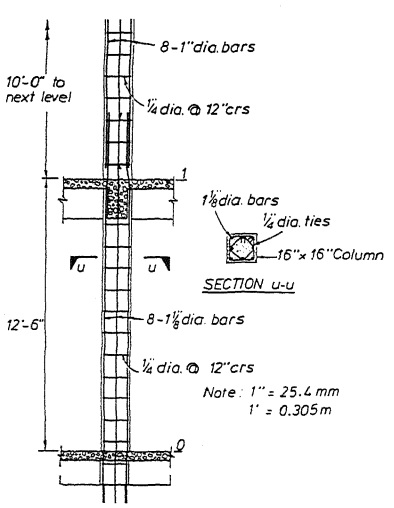


Figure 16. Details of reinforcement in a column of a New Zealand building frame designed in the 1950s.

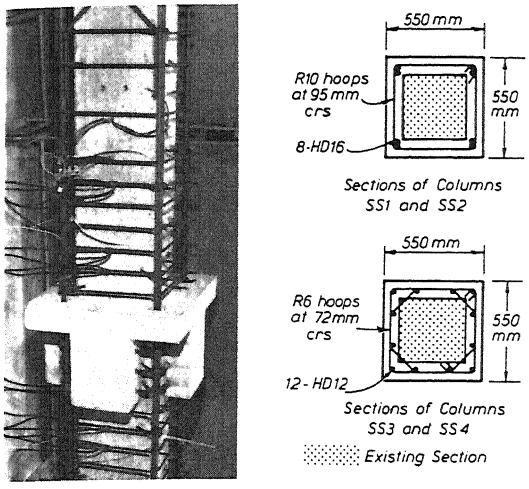


Figure 17. Reinforcement details for retrofitted column units.

the available displacement ductility factor was poor. Excellent ductility was achieved from the retrofitted columns. The performance of all retrofitted columns was quite similar, indicating that the previous damage to the as-built columns and the two different transverse steel arrangements had little influence on the behaviour of the retrofitted columns. Tests are now being conducted on replicas of the beam-column joint regions of the building. The joint core contains no joint shear reinforcement and relatively large diameter longitudinal bars pass through the joint.

### 9.3 Tests on Bridge Pier Subassemblages

A recent study at the University of Canterbury (Park and Rodriguez 1991, Dekker and Park 1992) has involved a reinforced concrete bridge designed in 1936. The bridge has a T-beam superstructure supported on and continuous with pier columns as shown in Fig. 18. The main deficiencies found in the original design were inadequate transverse reinforcement in the potential plastic hinge regions of the columns and inadequate anchorage length of the plain round longitudinal column bars in the capbeam of the bridge deck. A full scale replica of a column-T beam subassemblage has been constructed and subjected to quasi-static cyclic lateral loading. The subassemblage was tested upside down, using the loading arrangement shown in Fig. 5.

The test confirmed the lack of adequate anchorage of the column bars which led to reduced lateral load capacity and to a significant loss of stiffness of the structure as the test progressed. The subassemblage was then retrofitted by breaking into the deck slab concrete, welding steel plates on to the ends of the

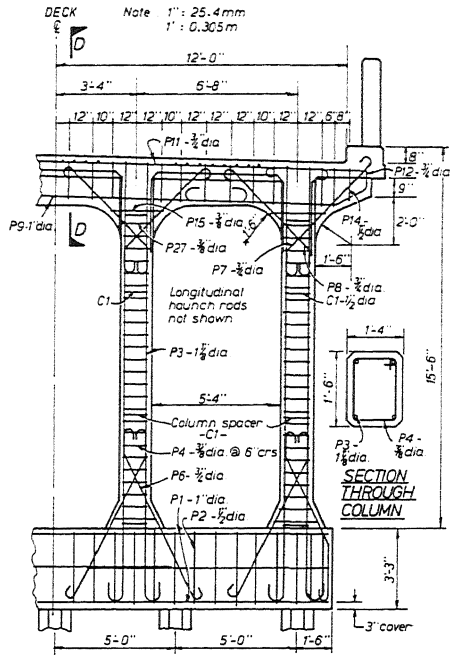


Figure. 18 Details of reinforcement in a New Zealand bridge pier designed in 1936.

longitudinal column bars and reinstating the removed concrete. The main flexural cracks in the column were also repaired by epoxy resin injection. The subassemblage when retested showed that the addition of end plate anchorages permitted the column to reach its full theoretical flexural strength, although again with a marked loss of stiffness due to the earlier bond failure. The test demonstrated that the retrofit method adopted to strengthen the subassemblage was effective, but indicated the desirability of retrofitting before earthquake damage occurred, due to the difficulty of reinstating bond strength along bars where slip had earlier taken place.

## 10 CONCLUSIONS

1. Significant experimental research to assess the behaviour of structural subassemblages subjected to severe earthquakes can be conducted using relatively simple test rigs, measuring equipment and quasi-static cyclic lateral loading.
2. Quasi-static cyclic loading tests are in effect a test of toughness of the structure since the imposed deformation cycles are normally applied symmetrically and are increased step-wise, and do not follow the complex displacement patterns caused by an actual earthquake.
3. Considerable further experimental research into

the behaviour of reinforced concrete elements and structural subassemblages subjected to be simulated seismic loading needs to be carried out to obtain a better understanding of structural behaviour.

4. The most urgent experimental research to be conducted into aspects of seismic behaviour and design would appear to be in the areas of structural ductility and damage, the use of high strength steel and concrete, the use of strut and tie models, the development of appropriate connections between precast concrete elements, and methods for retrofitting existing structures.

5. Collaborative research projects involving several countries are an effective way of pooling information, promoting discussion and seeking unified codes.

## 11 ACKNOWLEDGEMENTS

The considerable efforts of the academic, technical and secretarial staff of the Department of Civil Engineering of the University of Canterbury are gratefully acknowledged. Also, the New Zealand earthquake engineering profession and the Earthquake and War Damage Commission are gratefully thanked for their encouragement and financial support.

## 12 REFERENCES

American Concrete Institute, 1989. Building code requirements for reinforced concrete. ACI 318-89.

American Concrete Institute, 1991. Design of beam-column joints for seismic resistance. ACI SP-123.

Caltrans, 1990. Seismic Design References. State of California, Department of Transportation, Division of Structures. Sacramento.

Cheung, P.C., Paulay, T. and Park, R. 1991. Seismic design of reinforced concrete beam-column joints with floor slab. *Research Report* 91-4, Department of Civil Engineering, University of Canterbury.

Dekker, D.R. and Park, R. 1992. The repair and strengthening of reinforced concrete bridge piers. *Research Report* 92-1, Department of Civil Engineering, University of Canterbury.

Dodd, L.L. and Cooke, N. 1992. The dynamic behaviour of reinforced concrete bridge piers subject to New Zealand seismicity. *Research Report* 92-4, Department of Civil Engineering, University of Canterbury.

Li Bing, Park, R. and Tanaka, H. 1991. Behaviour of confined high strength concrete columns under seismic loading. *Proceedings of Pacific Conference on Earthquake Engineering*, Auckland 1: 183-194.

Mander, J.B., Priestley, M.J.N. and Park, R. 1988. Theoretical stress-strain model for confined concrete. *Journal of Structural Engineering, American Society of Civil Engineers* 114(8): 1804-1826.

Mander, J.B., Priestley, M.J.N. and Park, R. 1988. Observed stress-strain behaviour of confined concrete. *Journal of Structural Engineering, American Society of Civil Engineers* 114(8): 1827-1849.

Park, R. and Paulay, T. 1975. Reinforced Concrete Structures. *John Wiley and Sons*. New York.

Park, R. 1988. Ductility evaluation from laboratory and analytical testing. *Proceedings of 9th World Conference on Earthquake Engineering*, Tokyo/Kyoto 8: 605-616.

Park, R. and Dai Ruitong, 1988. A comparison of the behaviour of reinforced concrete beam-column joints designed for ductility and limited ductility. *Bulletin of the New Zealand National Society for Earthquake Engineering* 21(4): 255-278.

Park, R. 1989. Evaluation of ductility of structures and structural assemblages from laboratory testing. *Bulletin of the New Zealand National Society for Earthquake Engineering* 23(3): 155-166.

Park, R. and Rodriguez, M. 1991. Retrofitting of reinforced concrete bridge piers for seismic resistance. *Proceedings of Annual Conference of New Zealand Concrete Society*, New Zealand: 43-58.

Priestley, M.J.N. and Park, R. 1987. Strength and ductility of concrete bridge columns under seismic loading. *Structural Journal of American Concrete Institute* 84(1): 61-76.

Restrepo, J.I., Park, R. and Buchanan, A.H. 1992. Tests on precast concrete resisting frame components typical from New Zealand. *Proceedings of 10th World Conference on Earthquake Engineering*. Madrid.

Rodriguez, M. and Park, R. 1990. Seismic load tests of reinforced concrete columns strengthened by jacketing. *Proceedings of Annual Conference of New Zealand Concrete Society*, New Zealand: 72-83.

Standards Association of New Zealand, 1992. General structural design and design loadings for buildings. NZS 4203:1992, Wellington.

Standards Association of New Zealand 1992. Design of concrete structures, NZS 3101:1982, Wellington.

Tanaka, H. and Park, R. 1992. Strength and ductility of reinforced concrete columns with interlocking spirals. *Proceedings of 10th World Conference on Earthquake Engineering*, Madrid.

Watson, S and Park, R. 1989. Design of reinforced concrete frames of limited ductility. *Research Report* 89-4, Department of Civil Engineering, University of Canterbury.

Xian Zuo Xin, Park, R and Tanaka, H. 1992. Behaviour of reinforced concrete interior beam-column joints designed using high strength concrete and steel. *Research Report* 92-3, Department of Civil Engineering, University of Canterbury.

Yanez, F.V., Park, R and Paulay, T. 1992. Seismic behaviour of walls with irregular openings.

*Proceedings of 10th World Conference on Earthquake Engineering*, Madrid.

Zahn, F.A., Park, R. and Priestley, M.J.N. 1986. Design of reinforced concrete bridge columns for strength and ductility. *Research Report* 86-7, Department of Civil Engineering, University of Canterbury.