Black Start Experiences for 400 kV Hydro Power Plant In Western Regional Grid of India

P. Mukhopadhyay[@], Vivek Pandey[@], Aditya P. Das[@] , Chandan Kumar[@], P.A.R Bende[#], K.K.Parbhakar[#], Jayant Agasty[#], R.P Rakhia[#], Cinderella Felix[#]

[@]Western regional Load Despach Centre, Mumbai, [#]Madhya Pradesh State Load Despatch Centre, Jabalpur

***Abstract*—Black start exercises are planned exercises carried out with the black start capable generating stations to test their readiness for the unforeseen emergency situation. The Western Regional grid in India is having a number of such units, which are either hydro or gas based power stations. Since 2011, various such exercises are being carried out on a regular basis in Western Regional Grid of India to bring out the challenges associated with grid restoration with black start of hydro & gas generators. This has helped the system operators in the upgrading the methodology of restoration and identifying other corrective actions for improving upon the existing practices for a successful black start. This paper is an attempt at sharing the experiences gained during various black start mock drills conducted in western region on a hydropower plant connected at 400 kV EHV grid and bring forth the challenges faced during this controlled black start activity followed by remedial actions. These exercises have helped in boosting the confidence of system operators to deal with real blackout scenarios while improving the performance of the black start capable generators over the years.**

Keywords—Black Start, Controlled Separation, Grid restoration, Indian Grid, Island build-up, Resiliency.

I. INTRODUCTION

The Indian power system is one of the largest synchronized electrical grids in the world with an installed generation capacity more than 303 GW [1]. The large size has strengthened the grid in terms of reliability and economy on one hand. However, at the same time it also poses new operational challenges wherein a disturbance in one small part can adversely impact the reliability of the rest of the grid. The Indian grid disturbance of July 2012 has shown the impact of such an occurrence and its fast spreading effect on the rest of the grid. In view of such emergencies, preparedness for grid restoration with the black start of the capable generators has to be ensured at any point in time. This will help in the faster restoration of the system in case of a large-scale outage in the system and reduce the economic and other losses during such emergencies.

Black Start is one of the major activities involved during the restoration of the grid by bringing on bar the self-starting generators, which are generally hydro and gas based stations with local stand-alone supply sources such as diesel generator sets (i.e. black start DG sets) for feeding station auxiliaries and restoring the grid by extending power supply to the large thermal and nuclear generating units. So, it becomes essential to have the black start capable generating stations to be equipped & ready all the time. Therefore, black start mock drills are being performed for these stations at regular intervals to know their readiness and assess the potential challenges if any. The black start mock drill activity consists of the following major steps:

1. Controlled islanding of the generating units with its radial load.
2. Creating blackout in the island by manual tripping of the unit.
3. The black start of the unit with its local stand-alone diesel generator supply followed by energization of the transmission line and load connection to build-up the island.
4. Check synchronization of the island with the rest of the grid.

In the Western Regional Grid of India, a number of such black start mock drill exercises have been conducted on various hydro and gas power plants in the recent past [2-4]. This paper discusses the black start mock drill at one of the Hydropower plant connected to the grid at 400 kV level-named Indira Sagar hydropower plant (ISP), which is located in Madhya Pradesh, India. The paper deliberates on the various mock drill activities which have been done on this power plant (ISP) in past and lessons learned during those exercises based on which a full successful black start drill was completed in 10th June 2014. The comparative analysis of each activity from the field trials is presented here to share the experience with the system operators and engineers across the globe. The paper has been divided into multiple sections, in which section II gives a brief overview of the Western Regional Grid of India and importance of black start while section III describes the Madhya Pradesh black start capability and Indirasagar hydropower plant. Section IV describes the previous mock drills at ISP units, various challenges faced, and lessons learned. Based on these lessons, section V briefs on the successful mock drill at ISP done in 10th June 2014. The next section concludes the paper and shows the future way ahead in this area. To summarize, the paper describes a stepwise approach on how the lessons gained from the past exercises helps in the carrying out the black start mock drill at various stations and reducing the interruption period during grid restoration in real blackout conditions.

II. WESTERN REGIONAL GRID OVERVIEW AND IMPORTANCE OF BLACK START MOCK DRILL

Indian grid has evolved out from the synchronous interconnection of five regional grids, which are Eastern,

978-1-4799-5141-3/14/$31.00 ©2016 IEEE

Northern, North-Eastern, Southern, and Western Regional Grids. The Western Regional (WR) grid is the largest grid in India having a total installed capacity of 103 GW [1]. The peak demand met in the Western Regional grid is of the order of 49.9 GW [2]. The generation consists of a mixture of different types of fuel & technologies viz. coal, nuclear, hydro, gas, wind and solar. WR grid operates the highest capacity thermal generating units of capacity 830 MW and more than 65 number of extra high voltage (EHV) transmission lines switched at 765 kV & around 398 EHV lines at 400 kV voltage level. Further, testing of the maiden 1200 kV ultra-high voltage (UHV) lines in the world is also underway for implementation in WR Grid.

The Western Regional grid consists of a large number of black start capable generating stations with a fair mix of Hydro and Gas based generating stations. Madhya Pradesh is having a large number of Hydropower plants while Gujarat is having a large number of gas power plants with black start capability. The mock drills on these generating stations are being done on regular interval for ensuring their preparedness to do black start under emergencies. Such activities are very important keeping in view the last grid disturbance of 2012 in India when some of the black start capable units failed and even in some cases the islands built-up around black started generators collapsed resulting in considerable delay in power supply restoration [3]. For example, Teesta hydro units in Northern India black started but the island thus formed did collapse several times due to various reasons. Similarly, a few units could not be black started, as mock drills have never been conducted on them in past. The importance of black start exercises & mock drill of restoration plans has been well recognized by the Indian Regulator in the Indian Electricity Grid Code(IEGC) [4] which mandates to conduct such exercises at regular intervals and regular testing of the black start DG sets.

The next section describes about the black start capability of Madhya Pradesh state of the Western Region of India. Along with the history of black start mock drill and black start done during emergencies in the state.

III. MADHYA PRADESH AND ITS RESILIENCY IN TERMS OF BLACK START CAPABILITY

Madhya Pradesh is a state geographically spread in the West central region of India. It is electrically interconnected to 3 neighboring states of Western Regional Grid (viz. Maharashtra, Chhattisgarh & Gujarat) and 2 neighboring states (viz. Uttar Pradesh and Rajasthan) of Northern Regional Grid of India. Madhya Pradesh has nine power stations with black start capability and all of them are hydropower stations. Figure 1 shows the approximate geographical distribution of these stations as well as electrical connectivity of Madhya Pradesh. These stations have a fair geographical diversity from the viewpoint of grid recovery which is evident from the above Figure 1. These black start capable hydropower stations in Madhya Pradesh do regularly conduct black start exercises to test & validate their crisis preparedness for grid restoration viewpoint. Table 1 indicates a summary of mock drills conducted at these stations in recent past as well as participation in WR grid recovery after the black out of 30th July 2002.

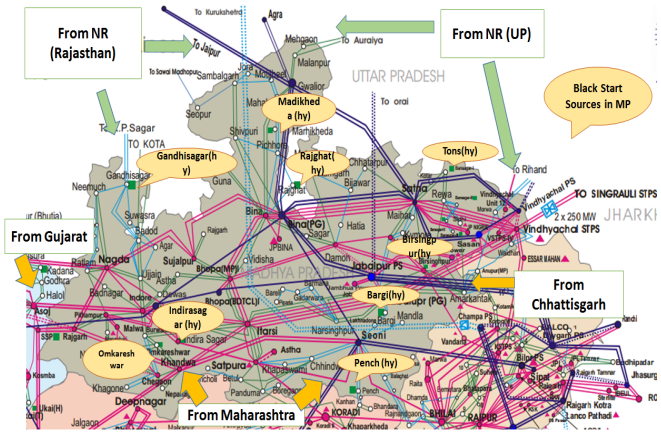

Fig. 1. Black Start sources in Madhya Pradesh .

TABLE I. SUMMARY OF BLACK START EXERCISES IN THE HYDROPOWER STATIONS OF MADHYA PRADESH

Hydro Power Station	Installed Capacity (MW)	Date(s) of Black Start Exercise	Participation in WR Grid recovery (post black out)
Gandhi Sagar	5 x 23	21-May-2014	30-July-2002
		28-Dec-2012	
Pench	2 x 80	06-Nov-2015	30-July-2002
		09-Jun-2014	
		12-Oct-2012	
Bargi	2 x 45	12-Oct-2015	30-July-2002
		08-Oct-2014	
		17-Feb-2012	
Tons	3 x 105	08-Oct-2015	30-July-2002
Indira Sagar	8 x 125	10-Jun-2014	-
		22-May-2012	

Out these black start power stations, Indira Sagar is an important hydro generating station having eight units each of 125 MW capacity. It is located at a distance of 10 km from the village Punasa in Khandwa district of Madhya Pradesh and is constructed on Narmada river basin. It is having Francis type turbine in all its generating units. It has two sets of 1000 KVA auto-start diesel generator sets for black start purpose. The generating station injects power to the grid at 400 kV level and is connected with three other substations via 400 kV transmission lines.

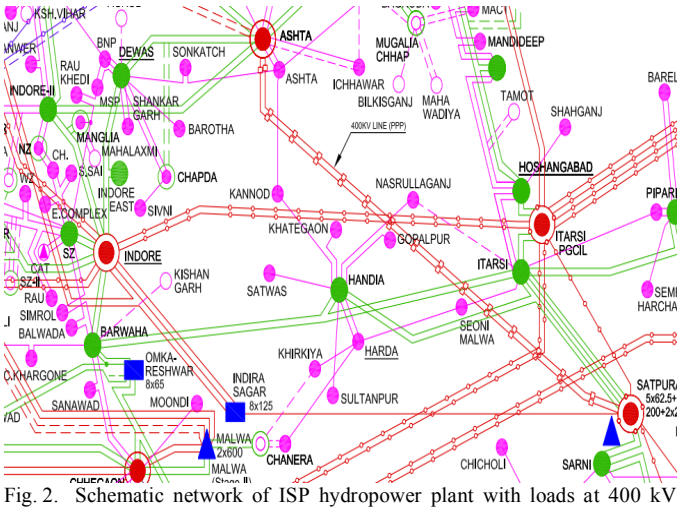

Fig. 2. Schematic network of ISP hydropower plant with loads at 400 kV Indore substation.

Figure 2 illustrates the geographical location and network connectivity of ISP along with loads at 400 kV Indore substation. It can be observed that the station is connected with the Satpura thermal power station, which could be revived by extension of power supply from ISP during restoration. This makes it a very crucial black start generating station in the Western Regional grid.

The next section briefly describes the two black start drills at Indira Sagar, conducted on 22nd May 2011 and 30th May 2014 respectively. In both these exercises, though initial stages of island build-up and islanded operation with the self-started generator were successful, the island failed to synchronize with rest of Indian grid on both the occasions.

IV. Earlier Black Start Drills at Indira Sagar Hydropower Plant and Lessons Learnt

During the first black start mock drill activity on 22nd May 2011, 125 MW Unit 5 of the ISP was islanded with 80 km long 400 kV ISP-Indore circuit 2, 400/220 kV Indore interconnecting transformer (ICT) 1, 220 kV Indore-Indore North Zone circuit 2 and associated loads [5]. During this exercise, the unit was kept on manual governor control so as soon as the above system was islanded from the rest of the system, frequency varied widely. Within the next 70 seconds, the frequency reached 45 Hz while fluctuating widely resulting in the generator tripping. To build-up the island, 11 kV supply to the auxiliary of the unit was cut off. This resulted in the auto-start of the DG set supplying the auxiliary of unit 5. After this, unit 5 was taken in service and 400 kV ISP-Indore Circuit-2 was charged. This was followed by energizing the ICT-1 at Indore in service and the 220 kV Indore-Indore North zone circuit 2. After that, 33 kV loads at Indore North zone were taken up in steps and generation was gradually raised in ISP unit 5 to maintain frequency within 50-51 Hz. Subsequently, the 400 kV Bus coupler was closed at 400 kV Indore substation to synchronize the island of 12 MW with the grid. The island was synchronized with the grid however, unit 5 at ISP tripped on excitation protection while experiencing an electrical fluctuation in parameters. Figure 3 shows the single line diagram of the islanded system where dotted portion shows the island. While figure 4 shows the frequency of the island and grid during the complete process.

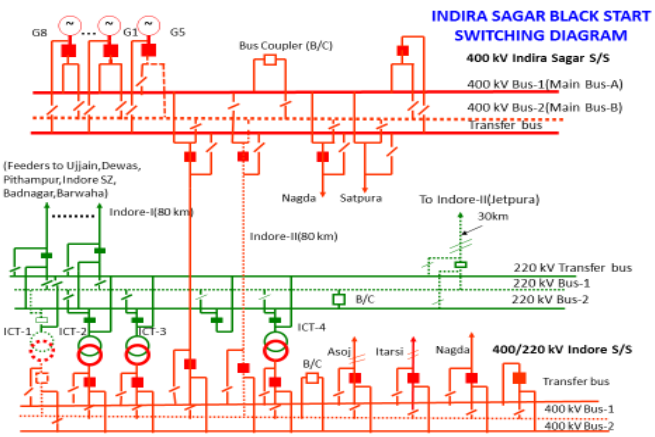

Fig. 3. Single line diagram of the Island system during black start mock drill activity on 22 May 2011. The island portion is shown with dotted line.

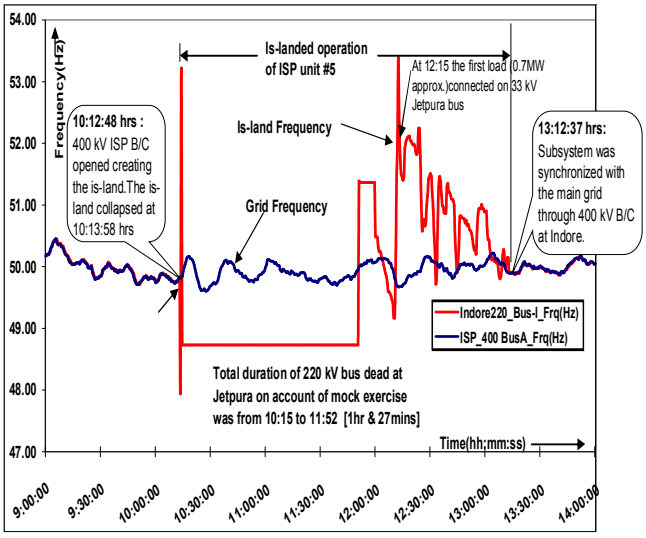

Fig. 4. Frequency of Island and Grid on 22 May 2011 black start mock drill activity. Red colour indicated island frequency while blue colour indicates grid frequency.

During the exercise, following lessons were learned:

1. The primary response of the unit is a necessity while operating in the islanded mode. This was absent at ISP causing collapse of the island in 70 seconds during controlled separation from the grid. The necessary modification in governor setting was required to enable the ISP units to operate in 'speed control' mode during normal operation, which was not operational during this exercise.
2. The tripping of Units on excitation problem suggested the issue with the synchronizing trolley at 400/220 kV Indore s/s. The check-synchronization was not smooth resulting in the mild jerk to the system.
3. The whole process took around 2 hours, which needed to be reduced by proper coordination & training of the personnel deployed at each substation.

These recommendations were taken up with all concerned to address the inadequacies. The second black start exercise at ISP was attempted after a detailed planning on 30th May 2014.

During the second mock drill process on 30th May 2014, the load to be connected was identified as 220 kV Indore East Zone rather than Indore North Zone. The rest of the process of the mock drill was similar except the change in substation providing radial load and one more unit being kept as a standby to take care of the contingency of tripping of the original unit. In this case, the governor was kept in free governor mode of operation (FGMO). The subsystem was islanded by opening the 400 kV Bus coupler at ISP resulting in frequency fluctuation which was stabilized by governor action (FGMO) of unit 6. Figure 5 shows the single line diagram of the islanded subsystem whereas the dotted portion highlights the island. After operating the island successfully for 35 minutes, loads were reduced gradually and the unit was shut down to proceed for self-start of Unit from its DG set.

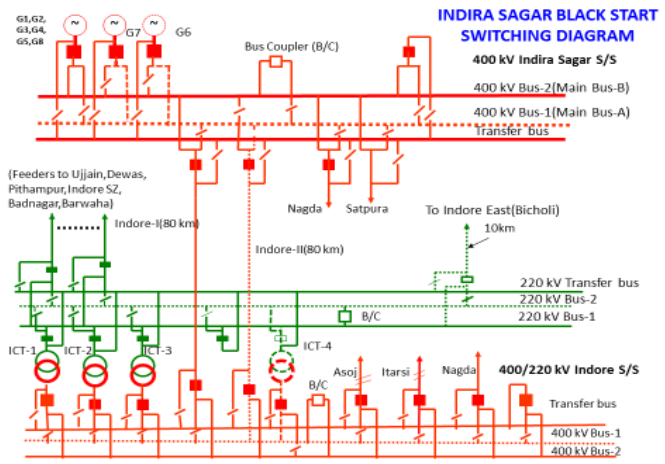

Fig. 5. Schematic diagram of black start Mock drill during 30th May 2014

After this controlled separation from the grid & successful island operation of ISP unit-6, next stage of the mock drill was initiated by switching off the 11 kV supply to the unit's auxiliaries. The black start DG set automatically came in service to supply auxiliary power to unit 6. Then 400 kV Bus 1 at ISP was charged followed by charging of 400 kV ISP – Indore circuit 2 along with 50 MVAR line reactor at 400 kV Indore substation. The 400 kV bus voltage at Indore substation was maintained at 380 kV with the help of excitation control of the generating unit at ISP. While charging the 400/220 kV, 315 MVA, ICT 4 at Indore, 400 kV ISP – Indore circuit 2 tripped on over voltage Stage II protection operation. Again, the process was repeated by taking the 400 kV line in service and charging of ICT and this time it sustained. After this, power supply was extended to the designated load of 220 kV Indore East substation to form the islanded subsystem. However, while switching on the 220/33 kV, 100 MVA ICT at 220 kV Indore East substation, the 400 kV Indore-ISP circuit 2 again tripped on Overvoltage Stage-II protection. After this line tripping for the 2nd time, it was decided to re-plan the exercise on some other day after analyzing the reason behind the repeated tripping of the EHV feeder during island build-up.

The analysis of the tripping of the 400 kV Line while charging of ICT was done using the disturbance recorder output file of the line. As it was suspected, during the energizing of ICT, transient overvoltage was detected which was around 472 kV for a duration of 160 msec. It was gathered that the over voltage stage II trip setting for the 400 kV transmission line was kept at 120 % with 100 msec time delay. During line charging, the transient voltage was rising to the range of overvoltage stage-II protection relays, leading to its operation and tripping of the line. It is a known fact that the energizing of transformers during black start condition may result in inrush of harmonic-rich current that can resonate with system impedance to produce temporary over voltages. Hence the over voltage stage II protection setting needed to be modified suitably at the substations especially for the black start activity. It was decided that the time delay setting of the over voltage stage II protection of the line be increased from 160 to 200 msec in order to avoid tripping on transient over voltage during ICT charging. Further, it was decided to initially charge the 400 kV lines & ICT at a reduced voltage level (0.60 to 0.65 p.u.) followed by gradual increase of voltage to rated levels using the automatic voltage regulator (AVR) of the generator.

Therefore, the two mock drills have given a good insight into the various problems that could be faced during the black start. The speed-droop control of the generator governor, adjusting protection setting of the generator, protection setting of the associated transmission lines, energization of transformers below rated voltage, healthiness of synchronization trolley etc. constitutes major prerequisites for a successful black start. To sustain any island, governor action of generating unit and correct information on load characteristics of the connected load are very crucial as learned from the above exercises. Based on these learnings, the next black start drill at ISP was planned on 10th June 2014 in line with the mock drill carried out on 30th May 2014 and the same is discussed in the next section.

V. Successful Black Start Mock Drill at Indirasagar Hydropower Plant on 10th June 2014

After the two black start mock drills at ISP and remedial actions taken based on the lessons learned, the next mock drill was planned on 10th June 2014. The steps for the drill were similar to the 30th May 2014 mock drill as discussed in the previous section. The sequence of activity in the mock drill are as follows:

- Prior to starting the activity, the elements to be separated as islanded system were kept on one bus while rest of the elements at each substation on the other bus. The bus coupler was kept in close position at various stations.
- At 09:30 Hrs : Unit 6 at ISP was synchronized.
- At 09:35 Hrs : 220 kV Indore East-Dewas circuit was opened to make Indore east load as a radial load from Indore substation.
- At 09:37 Hrs :220 kV Bus Coupler at 400/220 kV Indore substation was opened.
- 09:38 Hrs : 400 kV Bus Coupler at 400/220 kV Indore substation was opened
- After balancing the load-generation i.e. Indore East load with Unit 6 generation to keep Bus coupler flow at ISP near to zero.
- At 09:44 hrs : 400 kV Bus Coupler at 400 kV ISP substation was opened.
- Islanded system operated with initial frequency variation between 48.31 to 51.25 Hz. After that FGMO acted and frequency was stabilised at 50 Hz.
- At 09:49 hrs : Island stability was tested by tripping one of the 33 kV feeders at Indore East and it was found that adequate governor response was provided by unit 6.
- At 09:53 hrs : Unit 6 was hand trip and island got collapsed.

- At 09:54 hrs : All associated circuit breakers in the island were opened to initiate the mock drill.
- At 09:59 hrs : 11 kV auxiliary supply was cut off after which DG set automatically came into service.
- At 10:01 hrs : Unit 6 was started with reduced terminal voltage (4 kV for rated voltage of 11 kV).
- At 10:05 hrs : 400 kV ISP dead Bus was charged and voltage of bus was increased to 160 kV and then to 210 kV.
- At 10:08 hrs : 400 kV ISP-Indore circuit 2 was charged from ISP end.
- At 10:09 hrs : 400 kV Indore Bus was charged by closing the circuit breaker of 400 kV ISP-Indore circuit 2 at Indore end. 400 kV Voltage of Indore was now 227 kV which was increased to 250 kV to charge the 400/220 kV ICT 4 at Indore.
- At 10:13 hrs : 400/220 kV ICT 4 at Indore was charged from 400 kV Side and after 1 minute 220 kV side circuit breaker was closed which subsequently charged the 220 kV bus at Indore.
- At 10:16 hrs : 220 kV Indore-Indore East circuit was charged from Indore end and synchronised at Indore East end.
- At 10:18 hrs : 220/33 kV ICT at Indore East was charged to take 33 kV bus in service.
- At 10:21 hrs : Generator terminal voltage were raised to increase the voltage to 400 kV ISP Bus voltage to 305 kV and 33 kV Bus voltage at Indore East to 27 kV to take up the loads.
- At 10:23 hrs : After the load connection as decided and island stabilisation check, AVR of Unit 6 was changed from Manual to auto mode. This changed the voltage of 400 kV ISP bus to 383 kV.
- Then the rest of the loads were connected and island frequency was maintained between 50-51 Hz by load changeover.

To synchronise the island with the grid, the frequency of the island was regulated to match the grid frequency by adjusting generator output. Bus voltage of the 400 kV ISP bus which was a part of the island was at 399 kV while the voltage of the bus which was connected with the grid was 407 kV. So generator excitation was controlled to bring the voltage of island bus to 407 kV. The voltage magnitudes, phase sequences and frequencies across the bus coupler breaker at ISP were closely monitored and it was check-synchronized at 11:02 hrs.

Figure 6 and figure 7 shows the grid frequency and island frequency along with the generation in the island during the mock drill. The first stage of the black start mock drill i.e. controlled separation of the selected system to form the island, its operation followed by its blackout is shown in the figure 6. While, the second stage which involved black start of the unit, island build-up and its resynchronization with the Western Regional grid has been shown in figure 7.

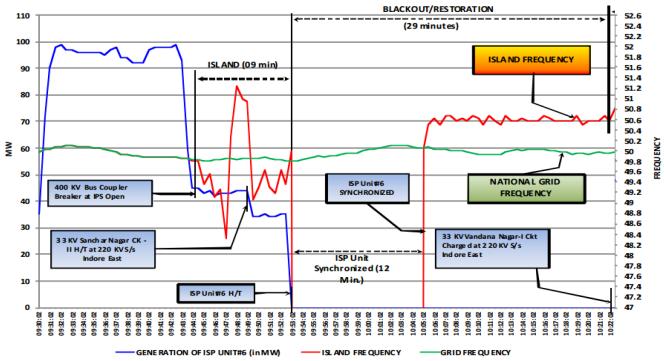

Fig. 6. Frequency of Island and the Grid along with island Generation during the mock drill showing island separation, its operation and blackout.

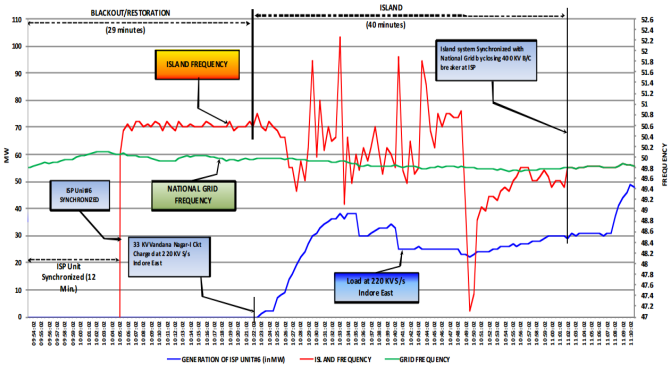

Fig. 7. Frequency of Island and the Grid along with island generation during the black start of the unit, island build-up and its synchronisation with the grid

.

This was the first complete black start mock drill activity at the Indira Sagar Hydropower plant where the island could be successfully synchronized with the grid. This was a step ahead in improving crisis preparedness & resilience of WR grid, particularly considering the fact that it was executed at EHV (400 kV) level of transmission. There was a significant improvement in this exercise of controlled restoration process involving black start & island build-up, which is evident from the comparison of the key indicators for the two exercises on 22.05.2011 & 10.06.2014. This has been illustrated at the at Table 2.

TABLE II. COMPARISION OF KEY INDICATORS

Description	22nd May 2011	10th June 2014
Time taken to start DG set after black out of Island	Instantaneous (Auto Start)	Instantaneous (Auto Start)
Time taken to take Unit in service after DG set self-start (Minutes)	24	2
Time taken to charge dead bus at ISP after starting the Unit (Minutes)	1	4
Time Taken to take 400 kV Line in service after charging of ISP Bus (Minutes)	14	8
Time taken to connect the first load after starting of Unit (Minutes)	55	21
Time taken to synchronize the island with the Grid after blackstart from DG Set (Minutes)	161	59
Max load catered by Island (MW)	12.6 MW	44 MW

Any specific issue observed during check-synchronisation with grid	Generator Tripped during synchronization	Successfully synchronized
Governor operation	Manual	Free Governor Mode
Synchronization Point	Indore	ISP

Thus, it can be observed from table 1 that the lessons learned from previous mock drills has helped in successfully completing all the stages of the black start exercise within considerably less amount of time. This exercise paved the way for conducting similar exercises at other hydropower stations connected at 400 kV level.

The mock drill provided an opportunity for the field test of many of the generator capabilities during black start from a DG set such as regulation of active and reactive power output to operate the island at reduced standards of frequency and voltage, operation of generator under partial loading condition without losing stability, primary frequency response of the generator and healthiness of synchronization facility. On the other hand, the transmission system capabilities that got tested were the ability of the switch gear to charge dead bus, healthiness of bus breakers, flexibility available in protection systems in terms of operating at other than normal settings for a short period. One major challenge of this black start mock drill was to charge a 400 kV long line from a single isolated generator for the formation of an island and then synchronizing this island with the grid at 400 kV level.

VI. Lessons learned and way ahead

The lessons learned from the exercises are summarized as under:

1. Free governor mode of operation is essential for stabilization of island.
2. The excitation control during initiation of the island has to be kept in manual control mode.
3. The energization of ICT has to be done at a reduced voltage rather than the rated level so that the transient overvoltage during resonance could be contained at the lower value.
4. The load type at each of the lower level feeders needs to be known for stabilization of the island.
5. Synchronization should be done such that the smaller island frequency should be slightly higher compared to the larger island.
6. Protection setting of all the elements at the station should be known to analyze any event properly.
7. Communication is of paramount importance during such activities and proper protocol needs to be established to share information between substations so as to reduce the restoration time.
8. The reactive power plays a vital role during the restoration of transmission lines. Therefore, such information needs to be available at each level of the control centers to find out the best restoration path.

The next activity associated with black start exercise of ISP can be planned to provide the startup power to the Satpura thermal power station when one of its generators is under shut down which will further enrich the learning & strengthen the grid restoration procedure.

Conclusion

Blackout in power grid is the worst kind of crisis in integrated grid operation. Since the power systems worldwide are evolving both in size and complexity, the conventionally adopted grid recovery procedures require constant review, up gradation, testing and validation. The black start exercises assume vital importance for any large interconnected power system since not only they do testify the existing restoration facilities but also prepare the system operators to restore the power system in a shortest possible time by identifying deficiencies and suggesting scopes for improvement. The black start drills do involve meticulous planning & coordination in a multi-user, multi-utility environment which goes a long way in reducing the downtime in dealing with a real blackout scenario where every second of delay affects the essential public services apart from causing financial loss to the industry & economy. This paper is in continuation to a series of several papers that has been published by Western Regional Load Despatch Centre with a view to sharing the Indian experience with the system operators and power sector utilities across the globe [4, 6-8].

Acknowledgment

The authors acknowledge with thanks the guidance and support given by managements of POSOCO and POWERGRID and for permitting the publication of this paper. The authors are also thankful to WRLDC, Madhya Pradesh State Load Despatch Centre and NHDC Ltd. for their cooperation & support. The views expressed in this paper are of the authors and not necessarily that of the organizations they represent.

References

[1] Central Electricity Authority, *All India Installed Capacity,* [Online]. Available: www.cea.nic.in/monthlyinstalledcapacity.html

[2] Western regional Load Desptach Centre, *Monthly Report of the Western region.*[Online]. Available : http://wrldc.com/Progresrep/

[3] Report of the enquiry committee on grid disturbance in Northern Region on 30th July 2012 and in Northern, Eastern & North-Eastern Region on 31st July 2012. [Online]. Available: http: // cea.nic.in /reports /articles /god/grid_disturbance_report.pdf

[4] Indian Electricity Grid Code 2010. [Online]. Available: http:// powermin.nic.in/transmission/pdf/Indian_Electricity_Grid_Code.pdf

[5] Pentayya, P.; Gartia, A; Das, AP.; Kumar, C., "Black start exercises experience in Western Region, India," India Conference (INDICON), 2013 Annual IEEE , vol., no., pp.1,5, 13-15 Dec. 2013

[6] Roy, Anjan; Veluchamy, V. K .:, Pentayya, P.; Mediratta, R.K.;Sheshadri, Pushpa; Patel, Haresh,"Restoration of Western Regional Grid – A Case Study of 30.07.02", National seminar on Grid operation and Management,Central board of Irrigation & Power ,Chennai,29th & 30th October 2002

[7] Raoot, M. G.; Pentayya, P.; Mishra, Sachala; Patel, Haresh, "Blackstart Restoration Plans for Western Region and case studies", Fifteenth National Power Systems Conference (NPSC), IIT Bombay, December 2008

[8] Verma, U. K.; Narasimhan, S.R.; Gartia, A; Bende, P. A R; Das, A P.; Gupta, A K., "Black start in power system — A case study in Western Region, India," Energy, Automation, and Signal (ICEAS), 2011