Enhanced Parametric STATCOM Decoupled Current Control Scheme for Voltage Regulation

Aman Ganesh
MMU, Mullana
Ambala, India

Ratna Dahiya
NIT Kurukshetra
Kurukshetra, India

G.K. Singh
IIT Roorkee
Roorkee, India

Abstract—**Using parametric model, this paper presents a design procedure for STATCOM proportional-integral (PI) voltage controller for enhancing the voltage profile of the multimachine system under dynamic disturbances. The proposed design scheme constantly updates the PI controller thus preventing it to integrate or to saturate to a higher value under the condition of uncertainty faced by the controller arising due to change in operating conditions and network configurations. This leads to better stability and enhanced closed loop performance in comparison to the conventional STATCOM linear PI controller and more recently used non-linear multivariable control scheme under different operating conditions. The performance of the proposed enhanced decoupled vector control scheme is evaluated for three phase multimachine system for different operating conditions and a comparison is drawn against conventional linear PI control scheme and multivariable control scheme.**

***Index Terms*— STATCOM, PI controller, voltage regulation, multivariable control.**

I. INTRODUCTION

Static Synchronous Compensator, STATCOM, is a shunt connected FACTS device installed in the transmission system to regulate the voltage at the point of common coupling. This is done by controlling the power flow in the line and the dc link voltage of the voltage source inverter of the STATCOM respectively [1]. Power system besides being nonlinear system owing to the presence of generator and STATCOM, is also a non stationary system owing to the presence of various uncertainties arising due to change in operating conditions and network configurations.

In recent years many researchers have focused on linear control strategy for improving the performance of the STATCOM [2-6]. The linear models are building around fixed operating conditions for which PI controllers are implemented for controlling the ac line voltage, dc link voltage and as internal current controller for STATCOM. Satisfactory dynamic response has been reported using linearized model. But they show degraded performance under varying operating conditions such as loss of generation, load switching or line outage etc. Secondly, tuning of PI controller is also a big research issue as tuning is either based on case by case study or is generally done by hit and trial method.

978-1-4799-5141-3/14/$31.00 ©2016 IEEE

Nonlinear control strategies based on feedback linearization and zero state concepts [7-11] and multivariable non linear controllers [12-14] have been implemented for the improvement in stability margin, power tracking and voltage regulation property of the STATCOM. Such controllers provide better controllability and effectiveness over a wide range of operating conditions. But the implementation of such control scheme is very difficult owing to the complex and sophisticated control structure. Secondly, they also require the mathematical model of the power system to be controlled; which is not always and easily available.

But the entire STATCOM linear, nonlinear or multivariable control scheme is based on rotating synchronous reference frame theory (RSF) which employs PI controllers as central controller [2-14].

In this paper, an enhanced linearized synchronous PI control scheme based on RSF is presented. The proposed synchronous PI controller (SPIC) uses a new control signal that feeds to the integrator of the conventional PI controller which saturates or integrates to a higher value while responding to the shift in operating condition. The performance of the proposed controller is compared against the conventional PI controller and the multivariable control scheme as implemented in [12-13].

The paper organization is as follows. The general structure of the STATCOM is described in section II. Section III A and C presents the brief insight of the benchmark linear and non-linear multivariable current scheme while subsection III.B gives the complete mathematical formulation of proposed enhanced controller. Comparative performance analysis is carried out in section IV followed by conclusion in section V.

II. STATCOM STRUCTURE

STATCOM is a voltage source inverter connected in shunt to the system (or grid) at the point of common coupling (PCC). The principle action of the STATCOM is to control the voltage source inverter in such a way so as to make it deliver the reactive and harmonic currents demanded by the load. For this the STATCOM has to compute the reactive and harmonic current absorbed by the load and has a control strategy which

makes the controller to follow the reference and ultimately this is achieved with the help of the voltage source inverter.

The grid voltage and current vector representation has been shown in Fig.1, where the voltage space vector v^s_{abc} in synchronous coordinates is expressed as (1) and using *Clarke's Transformation* the voltage vector is represented as (2)

$$v^s_{abc} = v_{dq} e^{j\theta} = v_\alpha + jv_\beta \tag{1}$$

$$v^s = \frac{3}{2} V_m e^{j(\omega t - \frac{\pi}{2})} \tag{2}$$

where V_m represents the peak voltage of v^s_{abc}. The current lags the voltage by a phase difference of Φ. Fig. 1 also shows the resolved components of current and voltage, using Park's Transformation, in orthogonal frame. The active current component I_d is in phase with the direct axis voltage V_d. This actually helps in producing a rotating frame since the voltage vector is continuously rotating at an angular frequency ω which happens to be the gird frequency.

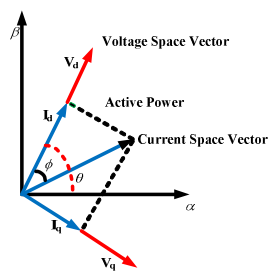

Fig. 1. Vector representations in rotating frame

The reference unit vectors, obtained by Park's Transformation, helps in continuously tracking the angle between the voltage and the load current vector and is represented by (3) where θ is the inclination angle of d-axis to α-axis

$$\cos\theta = \frac{|V\alpha|}{|V|} = \sin\omega t \qquad \sin\theta = \frac{|V\beta|}{|V|} = -\cos\omega t \tag{3}$$

Now under the consideration of the sudden load change or under the transient effect of fault occurrence the frequency of the system will change hence the reference current generation will be affected this is represented by (4) where ω_i represents the arbitrary frequency of load current. The transformation of the current to the d-q axis using unit vectors is

$$\begin{aligned} i_d &= \frac{3}{2} I_m \cos[(\omega_i - \omega)t - \phi] \\ iq &= \frac{3}{2} I_m \sin[(\omega_i - \omega)t - \phi] \end{aligned} \tag{4}$$

Under the balanced steady state condition, when ω_i is equal to ω , i_{dq} are constant quantities. Otherwise sinusoidal variations are shown by (4) because of the frequency difference. Thus the harmonics will appear as ripples in the d and q axis.

The voltage source inverter output equation [24] f the STATCOM on the ac side is represented as (5)

$$\begin{aligned} v_d &= Ri_d + L\frac{di_d}{dt} - \omega L i_q + v_{in} \\ v_q &= Ri_q + L\frac{di_q}{dt} + \omega L i_d \end{aligned} \tag{5}$$

where R and L represents the resistive and the inductive value of the coupling reactor of the STATCOM. The above equation represents voltage references v_d and v_q obtained from the current reference represented by (4) to control the voltage source inverter. For the coupled (initiated by the term ωL) multiple input multiple output system defined by (5) a fully decoupled d-axis and identical q-axis transfer function can be obtained as

$$G_p(s) = \frac{i_d(s)}{v_d(s)} = \frac{1}{(R + sL)} \tag{6}$$

III. Current Controller Design

A. Conventuonal Current Control Design

Since the current measurements are transformed to DC quantities, a simple PI controller is implemented for the obtained transfer function (6) for achieving the pre specified dynamics. Therefore the PI controller is of the type $G_c(s)$

$$Gc(s) = \frac{1 + sTp}{sTn} \tag{7}$$

The controller time constant Tp and integration time constant Tn are usually determined on the criterion based on phase margin. The times constant are generally system dependent.

Conventionally for achieving fully decoupled system feed forward signals, ωL, are adopted for cancelling the effect of coupling as shown in Fig. 2.

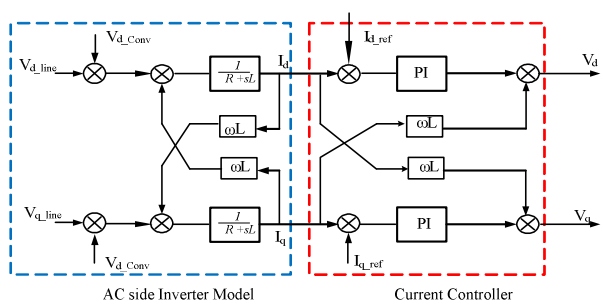

Fig. 2. Conventional Decoupled Control Scheme

But precise measurement and determination of L and instantaneous idq is not possible therefore precise decoupling is not achievable. In order to achieve better decoupling scheme two methodologies can be adopted

(1) By tuning the parameters of PI controller so that better mapping of i_{dq} is done for controlling the injected phase voltage through PWM converter

(2) By redefining the conventional current control scheme

Adopting the first methodology and by simply mapping the closed loop transfer function of Gp(s) and Gc(s) as a low pass filter with bandwidth 'ω' controller parameters are Tp=1/ωL and Tn =1/ωR. The second methodology is given below

B. Synchrnoized PI Controller (SPIC)

Since the coupling is initiated by the term ωL, hence the performance of the scheme is dependent upon the inductor value. For improved decoupling the coupling reactance has to be represented in the stationary *dq* frame. So (5) can be represented as

$$\frac{i_{dq}(s)}{v_{dq}(s)} = \frac{1}{R+(s+j\omega)L} = \frac{1}{(R+sL+j\omega L)} \tag{8}$$

So (5) can now be represented as

$$L\frac{di_{dq}}{dt} = v_{dq} - (R + j\omega L)i_{dq} - v_{in\,dq} \tag{9}$$

Applying Laplace Transform on (9) and obtaining the transfer function of the ac side of inverter as (11) further represented as (11)

$$i_{dq} = \frac{v_{dq} - v_{in\,dq}}{R + sL + j\omega L} \tag{10}$$

$$G_{dq} = \frac{i_{dq}}{v_{in\,dq}} = -\frac{1}{R + sL + j\omega L} \tag{11}$$

1) Cross Coupling Cancellation

The major disadvantage of coupling between the d-axis and q-axis component is that no independent control of active and reactive power flow can be established leading to poor voltage and frequency control. Hence it becomes necessary to minimize or to eliminate the effect of coupling due to the factor jωL. This can be minimized by accurately estimating L as $\vec{L}$ Since using a linear PI controller coupling can be eliminated by estimating the dq voltage E as $\vec{E}$. Thus (9) can now be expressed as

$$v_{dq} = -v^*_{dq} + \vec{E}_{dq} - jw\vec{L}i_{dq} \tag{12}$$

If estimation in L and E hold true then (12) reduces to (13) as

$$i_{dq} = \frac{v^*_{dq}}{R + sL} \tag{13}$$

Giving the new transfer function as

$$G'(s) = \frac{i_{dq}}{v^*_{dq}} = \frac{1}{R + sL} \tag{14}$$

2) Decoupled Current Control

As explained earlier in section III.A controller $G_c(s)$ is a PI type linear controller with proportional gain T_p/T_n and integral gain $1/T_n$ as defined by (7) is implemented for obtaing the decoupled current control. Defining i_{dq}, complex int egrator state variable as $\frac{dI}{dt} = \varepsilon$, (12) can be rewritten including the controller $G_c(s)$ as

$$v^*_{dq} = \vec{E}_{dq} - \frac{T_p}{T_n}\varepsilon_{dq} - \frac{1}{T_n}i_{dq} - j\omega\vec{L}i_{dq} \tag{15}$$

Separating the real (d-axis component) and the imaginary (q-axis component)

$$v^*_d = \vec{E}_d - \frac{T_p}{T_n}\varepsilon_d - \frac{1}{T_n}i_d - j\omega\vec{L}i_q \tag{16}$$

$$v^*_q = \vec{E}_q - \frac{T_p}{T_n}\varepsilon_q - \frac{1}{T_n}i_q + j\omega\vec{L}i_d \tag{17}$$

3) Proposed Control Scheme

In a three phase condition under the severe condition of 3 phase z-fault the voltage drops to zero while the current shoots to a maximum value if the same is transformed in dq axis this can be translated as there is a step change in d-axis current while the q-axis current is zero. So under this condition there is large demand of voltage to overcome the controller uncertainty. For the reference voltage *v*, the controller output is given as:

$$v_{dq}(t) = \frac{T_p}{T_n}\varepsilon_{dq}(t) + \frac{1}{T_n}i_{dq}(t) \tag{18}$$

The integrator of the PI controller saturates if the voltage *v* is limited or saturated. This is because in linear PI controller the integrator integrates to higher value if v does not vary. In order to overcome this saturation the integrator is fed with another error signal $\bar{\varepsilon}$, so that a new reference voltage is $\bar{v}$.

$$\bar{v}_{dq}(t) = \frac{T_p}{T_n}\bar{\varepsilon}_{dq}(t) + \frac{1}{T_n}i_{dq}(t) \tag{19}$$

Then by writing the difference in the reference voltage the new error is

$$\bar{\varepsilon}_{dq} = \varepsilon dq + \frac{\bar{v}_{dq} - v_{dq}}{T_p/T_n} \tag{20}$$

For the decoupled controller as expressed by (12) it can be expressed as

$$v^*_{dq} = \vec{E}_{dq} - \frac{T_p}{T_n}\varepsilon_{dq} - \frac{1}{T_n}i_{dq} - j\omega\vec{L}i_{dq} \tag{21}$$

So after saturation (21) updates to (22) as

$$v^*_{dq} = \vec{E}_{dq} - \frac{T_p}{T_n}\bar{\varepsilon}_{dq} - \frac{1}{T_n}i_{dq} - j\omega\vec{L}i_{dq} \tag{22}$$

So the new signal/error fed to the controller is obtained by finding the difference between reference and the actual value of voltage i.e. $v^*_{dq} - v_{dq}$ is

$$\bar{\varepsilon}_{dq} = \varepsilon dq + \frac{\bar{v}_{dq} - v_{dq}}{T_p/T_n} \tag{23}$$

The Proposed Control Scheme is shown in Fig. 3.

C. Loop Shaping Multivariable PI Controller [12]

Many researchers have elaborated the use of multivariable control scheme which involves the use of plant inversion technique for designing a decoupled current control scheme. Starting with (6) equation (12) is deduced, and is recalled for further analysis.

The dq axis are coupled because of the presence of the term $j\omega L$ For the cancellation of the coupling term the PI controller $G_m(s)$ is so selected that it leads to pole-zero cancellation. The selected PI controller is

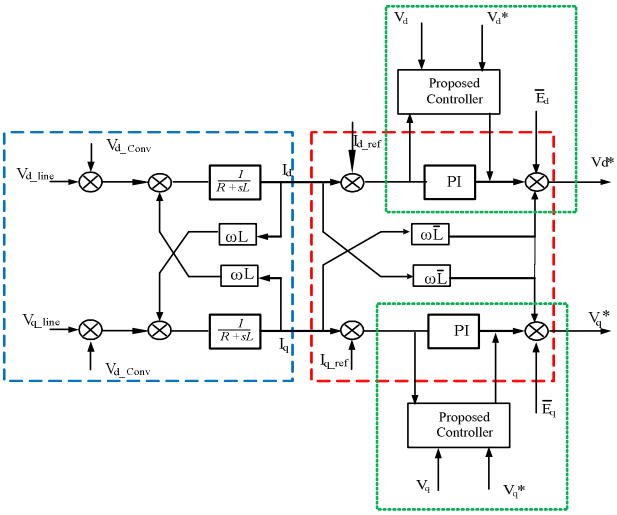

Fig. 3. Synchronized PI Control Scheme

$$G_m(s) = \frac{(1 + sTp + j\omega Tp)}{sTn} \tag{26}$$

$$G_p(s) = \frac{i_d(s)}{v_d(s)} = \frac{1}{(R + sL + j\omega L)} \tag{27}$$

The open loop function $G_p(s)\ G_m(s)$ is so selected that it results in cancellation of the coupling term. The obtained control equations are

$$\begin{aligned} v_d &= \left(\frac{1+sT_p}{sT_n}\right) i_d - \left(\frac{\omega T_p}{sT_n}\right) i_q \\ v_q &= \left(\frac{\omega T_p}{sT_n}\right) i_d + \left(\frac{1+sT_p}{sT_n}\right) i_q \end{aligned} \tag{28}$$

The simplified control structure is shown in Fig. 4.

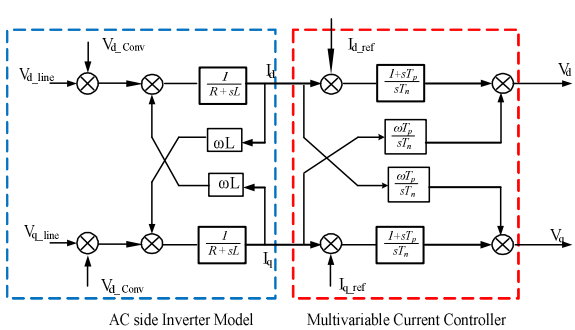

Fig. 4. Multivariable PI Current Control Scheme

IV. Performance Evaluation

A. Test Model

In order to verify the effectiveness of the proposed control strategies a ±100 MVAR STATCOM is implemented with an IGBT bridge based PWM VSC connected to 500 KV bus. The STATCOM is connected for midpoint voltage regulation of 500 KV power grid consisting of 3000 MVA and 2500 MVA equivalents connected to a 600 km transmission line.

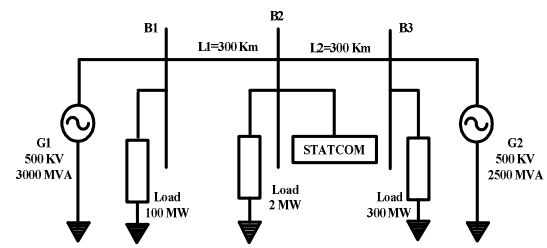

Fig. 5. Test System

The line regulation is achieved with the help of the conventional PI controller installed as voltage and current regulator. The performance of the proposed synchronized PI controller (SPIC) and proposed parametric control (PC) approach is compared with the original system, the conventional system (CS), and the loop shaping multivariable control (MC) approach as adopted in [12-13]

In the current study for the conventional controller Tn =3.3 and Tp= 33, for the Multivariable Control scheme Tn = 1.42, Tp = 28.93 and the SPIC parameters are tuned in terms of coupling reactor having resistance of 0.3 Ω and inductance of 1.3 mH which is same for all the three cases giving Tp =21.22 and Tn=0.10

B. Test Cases and result discussion

The objective is to regulate the bus voltage when subjected to disturbances such as occurrence of fault, line outage and change in generation pattern. For this the steady state voltage is assumed to be 1.0 p.u. The STATCOM will operate immediately after the change in operating condition happens in which the STATCOM is expected to bring the voltage level back around to 1 p.u. For analysis purpose the reference current tracking $i_{dq}*$, active and reactive power flow and lastly the voltage regulation achieved have been included in the simulation study.

The first set of simulation study (Fig. 6 to Fig. 9) corresponds to the line outage for 150 ms disconnecting the generator G2 from 0.5 s to 0.65 s. Under this condition the PCC steady state voltage raises to 1.88 p.u. The STATCOM is unable to overcome this transient condition owing to its capacity limit. But when the line is reconnected the voltage gets back to 1.0 p.u

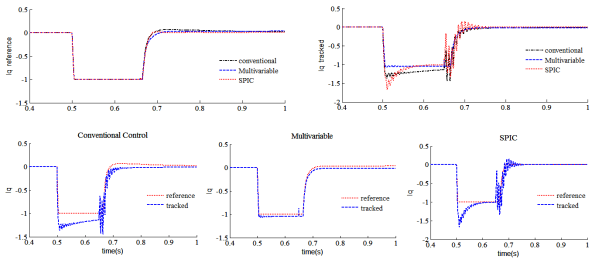

Fig. 6. I_q reference current tracking (line outage)

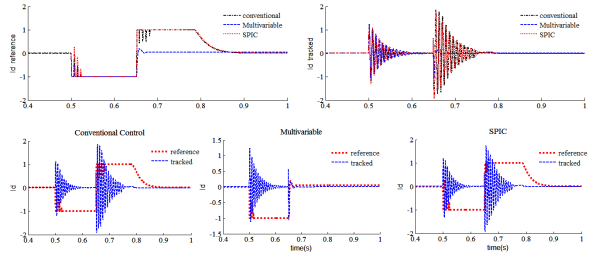

Fig. 7. I_d reference current tracking (line outage)

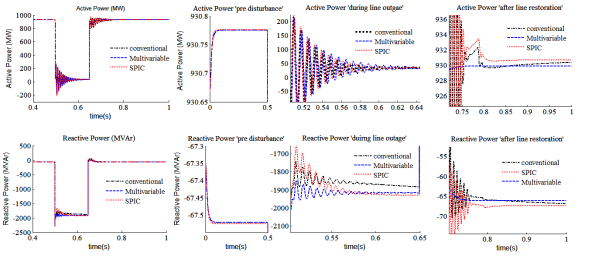

Fig. 8. Active and Reactive Power (line outage)

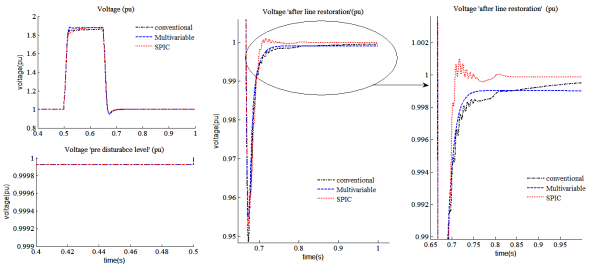

Fig. 9. Voltage profile (line outage)

In the second and the last study (Fig. 10 to Fig. 13) two consecutive disturbances in term of inductive and capacitive loading at bus B3 is applied at 0.5s and 0.8 s for 100 ms.

From the simulation results it is clear that the SPIC controller performs better the conventional and the multivariable controller in terms of reference current tracking, as a result of which the proposed synchronous controller regains the steady state voltage by using higher reactive power demand in comparison to the other two controllers and results in superior voltage regulation ability.

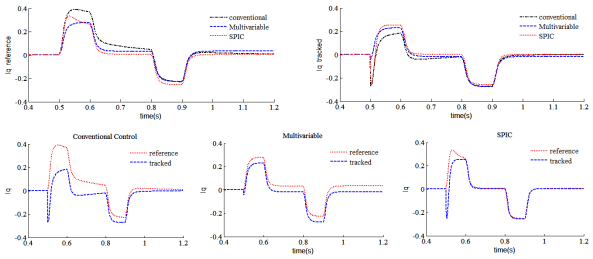

Fig. 10. I_q reference current tracking (step loading)

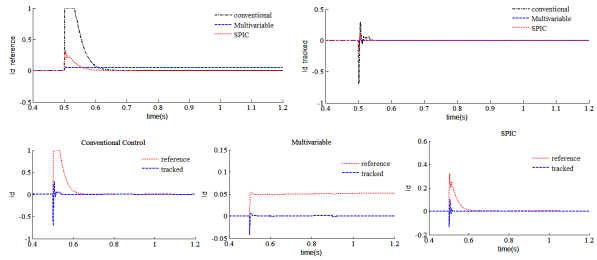

Fig. 11. I_d reference current tracking (step loading)

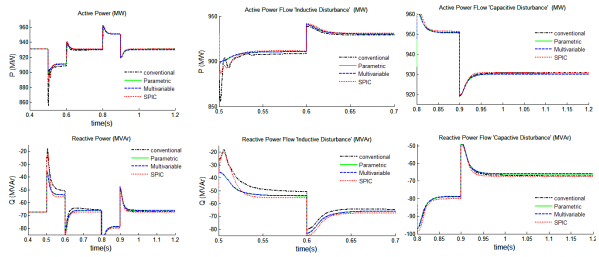

Fig. 12. Active and Reactive Power (step loading)

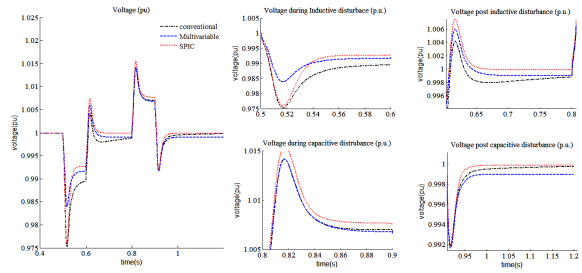

Fig. 13. Voltage profile (step loading)

V. CONCLUSION

In this paper a synchronous PI controller (SPIC) for STATCOM is proposed. The proposed enhanced linear control strategy responds well to the network disturbances by maintaining the steady state voltage level. This is achieved because of better reference current tracking which leads to enhanced reactive power support during contingency period in comparison to the conventional STATCOM linear PI controller and the non-linear multivariable STACOM controller. The proposed control scheme is easy to implement as it does not imposes additional structural complexity and has

plug and play capability as tuning of PI controller requires minimum attention.

REFERENCES

[1] N.G. Hingorani and L. Gyugyi, *Undersatnding FACTS:Concepts* and Technology of Flexible AC Transmission Systems. Standard Publishers Distributors, New Delhi, 2001.

[2] Chatratana "STATCOM Analysis and Controller Design for Power System Voltage Regulation" IEEE/PES Transmission and Distribution Conference, China, 2005.

[3] Amit Jain, Karan Joshi, Aman Behal and Ned Mohan, "Voltage regulation with STATCOMs: Modeling, Control and Results" IEEE transactions on Power Delivery, vol. 21, no. 2, 2006.

[4] B. S. Chen and Y. Y. Hsu, "A minimal harmonic controller for a STATCOM," IEEE Trans. Ind. Electron., vol. 55, no. 2, pp. 655–664, Feb. 2008.

[5] Woei-Luen Chen, Wei-Gang Liang and Hrong-Sheng Gau "Design of a Mode Decoupling STATCOM for Voltage Control of Wind-Driven Induction Generator Systems" IEEE Transactions on Power Delivery, vol.25, no.3 pp.1758–1767, 2010.

[6] Reyes M, Rodriguez P, Vazquez S, Luna A, Teodorescu R and Carrasco JM "Enhanced decoupled double synchronous reference frame current controller for unbalanced grid voltage conditions" IEEE Transaction on Power Electronics, vol. 27, pp. 3934-3943 , 2012.

[7] Edward Song , Alan F. Lynch and Venkata Dinavahi , "Experimental Validation of Nonlinear Control for a Voltage Source Converter" IEEE Tranaction on Control Suystem Technology, vol. 17, no. 5, pp. 1135-1144. 2009.

[8] Vitaly Spitsa, Abraham Alexandrovitz and Ezra Zeheb, "Design of a Robust State Feedback Controller for a STATCOM Using a Zero Set Concept" IEEE Trans. Power Del., vol. 25, no. 1, pp. 456-467, 2010.

[9] Keyou Wang and Mariesa L. Crow, "Power System Voltage Regulation Via STATCOM Internal Nonlinear Control" IEEE Trans. Power Systems, vol. 26, no. 3, pp.1252-1262, 2011.

[10] Y. Han, Y.O. Lee and C.C. Chung, "Modified non-linear damping of internal dynamics via feedback linearisation for static synchronous Compensator" IET Gener. Transm. Distrib., 2011, Vol. 5, Iss. 9, pp. 930–940, April 2011.

[11] Xu, Yao, and Fangxing Li. "Adaptive PI control of STATCOM for voltage regulation." IEEE Transactions on Power Delivery, vol. 29, no. 3, pp. 1002-1011, 2014.

[12] Bahrani B, Maryam Saeedifard, Alireza Karimi and Alfred Rufer, "A Multivariable Design Methodology for Voltage Control of a Single-DG-Unit Microgrid" IEEE Transaction on Industrial Informatics , vol. 9, no. 2, pp. 589-599, 2011.

[13] Behrooz Bahrani, Alireza Karimi, Benoît Rey and Alfred Rufer, "Decoupled dq-Current Control of Grid-Tied Voltage Source Converters Using Nonparametric Models" " IEEE Tranaction on Industrial Electronics, vol. 60, no. 4, pp. 1356-1366, 2013.

[14] Hesam Rahbarimagham, Erfan Maali Amiri, Behrooz Vahidi, Gevorg Babamalek Gharehpetian and Mehrdad Abedi, "Superior decoupled control of active and reactive power for three-phase voltage" Turkish Journal of Electrical Engineering & Computer Sciences, vol. 23, pp.1025-1039, 2013.