Weak Bus-oriented Optimal Var planning based on Grey wolf optimization

Saurav Raj
Department of Electrical Engineering
IIT (ISM)
Dhanbad, India
E-mail: sauravsonusahu@ee.ism.ac.in

Biplab Bhattacharyya
Department of Electrical Engineering
IIT (ISM)
Dhanbad, India
E-mail: biplabrec@yahoo.com

***Abstract*— From last few decades, the frequent occurrence of the voltage collapse has attracted more and more attention. Voltage collapse is the system instability, usually, associated with the shortage of reactive power at the load end involving the entire power systems. The most effective method to counter voltage collapse is to find out the possible locations where voltage collapse may occur i.e. to find the weakest buses existing in the system. Weak bus oriented Var planning by grey wolf optimization (GWO) for system security has been proposed in this paper. Weak buses of the system has been determined by using four different methods, namely, fast voltage stability index (FVSI), line stability factor (LSF), line stability index (LSI) and voltage collapse proximity indicator (VCPI) method. Standard IEEE 57 bus test system is used as the test system to show the applicability of the proposed work. It has been observed that Var planning based on the detection of weak buses by voltage collapse proximity indicator provides the best result among other methods reported in literature.**

Keywords*— *Active power loss; Grey wolf optimization; Var planning; weak bus.

I. INTRODUCTION

The detection of principle cause of voltage instability is the most imperative task in order to check any possibility of possible voltage collapse for the voltage security assessment proper co-ordination of Var planning. One of the effective methods is to find the possible locations where voltage collapse may occur while for Var planning point of view it is suitable to identify the weakest buses in the system. The weakest point provides significant information regarding where voltage collapse appears in severe contingency cases and where reactive power sources needs to be installed in order to reduce active power losses and operating cost of the system. Earlier, reactive power sources locations were simply assumed. Now researchers have introduced some methods to identify weak nodes and new optimization techniques based on Var planning for finding optimum magnitudes of control variables. Optimal reactive power planning is presented using nonlinear programming technique in [1] and successive linear programming in [2]. Line stability factor method is discussed in [3] for predicting voltage collapse. Simulated annealing technique is presented in [4] to determine locations for installing capacitors and to control the variables. Sensitivity parameter method and relative voltage change method is discussed in [5] to detect weak buses. Modal analysis method is shown in [6] which uses reduced Jacobian matrix to analyse and voltage stability evaluation. Voltage collapse prediction is presented in [7-8] which is based on right singular vector corresponding to minimum singular value of Jacobian matrix and voltage collapse proximity indicator. In [9], weak buses are identified using voltage collapse proximity indicator and then simulated annealing approach is applied to obtain optimal Var planning. Line stability index method for the detection of weak bus based on the concept of power flow through single line is presented in [10]. An effective method for real time monitoring of the system and voltage collapse prediction is described in [11]. Reactive power optimization in [12] is done using successive quadratic programming method. Authors have discussed novel fast voltage stability index method for voltage stability analysis in [13]. Principle of Grey wolf optimization technique is introduced in [14]. Swarm intelligence based PSO and its hybrid algorithms has been utilized in [15] for reactive power planning. Authors have presented seeker optimization algorithm for reactive power planning in [16].

In the present work, a standard IEEE 57 bus test system is being presented based on different methods for the identification of weak buses. In the later work, the proposed GWO algorithm is implemented for controlling the Var sources in order to reduce both the active power loss and the operating cost of the test system simultaneously. The diagram for the studied test system is shown in Appendix section.

II. PROBLEM FORMULATION

The mathematical problem of present work presents a methodology to find the optimal positions of Var sources on an existing connected power system network. The objective of optimal positions of Var sources is to optimize certain functions such as minimization of active power loss and operating cost. Hence objective functions can be formulated as follows:

(i) Minimization of active power loss

The main objective of Var planning is to minimize active power loss in the the transmission can be stated as:

978-1-4799-5141-3/14/$31.00 ©2016 IEEE.

$$P_{loss} = \sum_{k=1}^{N_L} g_k \left[V_s^2 + V_r^2 - 2V_s V_r Cos\left(\delta_s - \delta_r\right)\right] \quad (1)$$

The equality and inequality constraints must be satisfied while searching optimal solution. The equality constraints can be defined as:

$$P_{Gs} - P_{Ds} - V_s \sum_{j=1}^{N_B} V_r \left[G_{sr} Cos\left(\delta_s - \delta_r\right) + B_{sr} Sin\left(\delta_s - \delta_r\right)\right] = 0 \quad (2)$$

$$Q_{Gs} - Q_{Ds} - V_s \sum_{j=1}^{N_B} V_r \left[G_{sr} Sin\left(\delta_s - \delta_r\right) - B_{sr} Cos\left(\delta_s - \delta_r\right)\right] = 0 \quad (3)$$

The inequality constraints can be defined as:

$$V_i^{\min} \le V \le V_i^{\max}, i \in N_B$$

$$T_i^{\min} \le T \le T_i^{\max}, i \in N_T$$

$$Q_{G_i}^{\min} \le Q_{G_i} \le Q_{G_i}^{\max}, i \in N_G$$

$$Q_{C_i}^{\min} \le Q_{C_i} \le Q_{C_i}^{\max}, i \in N_{Shunt}$$

Where N_L= Number of lines, N_B= Number of buses, N_T= Number of tap setting of transformer, N_G=Number of generator buses, N_{Shunt}=Number of Shunt capacitors.

(ii) Minimization of operating cost

The operating cost reduction is also an objective function of the present work. This objective function consist of two components. One is cost due to energy loss in the system and another is cost of shunt capacitors installed at weak buses. The data is given below [4].

Cost of energy loss=0.06$/KWhr
Fixed installation cost of shunt capacitors=1000$
Cost of capacitor/KVar=3$
Number of days in a year=365
Number of hours in a day=24

Total operating cost=Energy cost + Cost of capacitor (4)

Where, Energy cost= $P_{Loss} \times 0.06 \times 100000 \times 24 \times 365$

III. IDENTIFICATION OF WEAK BUSES

Identification of weak buses gives information like at first where voltage collapse may occur and need to have new reactive power sources to be installed. These methods are based on the concept of power flow through single line. The single line of two-bus system network is shown in figure-1.

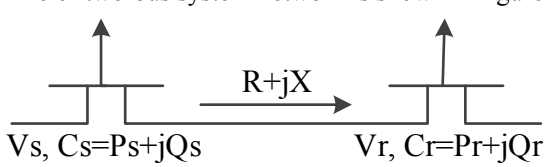

Fig. 1. Two-bus modal representation of single line

The different methods for the identification of weak buses are given below:

(i) Fast voltage stability index (FVSI) method

Authors have proposed [13] novel fast voltage stability index method for detection of weak buses. The index of that line is termed as FVSI. The line should have FVSI value less than unity to avoid voltage collapse. If FVSI value remains less than 1.0 then system is said to be stable. The fast voltage stability index can be defined as:

$$FVSI = \frac{4Z^2 Q_r}{V_s^2 X} \quad (5)$$

Where Q_r= Reactive power at receiving bus, Z=Impedance of line, V_s=Voltage of sending bus, and X=Line reactance of that line.

(ii) Line stability factor (LSF) method

Mohamed and Jasmon [3] introduced line stability factor method. If LSF value remains less than 1.0 then system is said to be stable and when this value become close to 1.0 then that line is approaching its instability point. Hence Line stability factor can be stated as:

$$LSF = 4\left(\frac{X}{V_s^2}\right)\left(\frac{X}{V_s^2} P_s^2 + Q_r\right) \quad (6)$$

(iii) Line stability index (LSI) method

Moghavvemi and Omar [10] proposed Line stability index method. The stability index of that line is termed as LSF. The LSF index value must remain less than unity in order to remain stable. The Line stability index method can be defined as:

$$LSI = \frac{4Q_r X}{\left[V_s Sin(\theta - \delta)\right]^2} \quad (7)$$

(iv) Voltage collapse proximity indicator (VCPI) method

Moghavvemi and Faruque [11] proposed voltage collapse proximity indicator method based on maximum power transfer theory of a line.

$$P_r = \frac{V_s^2 / Z_s}{1 + \left(\frac{Z_r}{Z_s}\right)^2 + 2\left(\frac{Z_r}{Z_s}\right) Cos\left(\theta - \phi\right)} \frac{Z_r}{Z_s} Cos\phi \quad (8)$$

Similarly, power loss in the line is

$$P_l = \frac{V_s^2 / Z_s}{1 + \left(\frac{Z_L}{Z_s}\right)^2 + 2\left(\frac{Z_L}{Z_s}\right) Cos\left(\theta - \phi\right)} Cos\theta \quad (9)$$

Maximum real power that can be transferred to the receiving end can be obtained using boundary condition $\frac{\partial P_r}{\partial Z_L} = 0$ that leads into $\frac{Z_L}{Z_s} = 1$. Substitute it in equation (8),

Maximum transferable power

$$P_{r(\max)} = \frac{V_s^2}{Z_s} \frac{Cos\phi}{4Cos^2\left(\frac{\theta - \phi}{2}\right)} \quad (10)$$

Hence VCPI can be defined as,

$$VCPI = \frac{P_r}{P_{r(\max)}} \tag{11}$$

Where, $Z_s\angle\theta$=Source impedance, $Z_L\angle\phi$=Load impedance. For voltage stability system, VCPI should have value less than unity. If the value exhibits closeness to 1.0 then it implies that it is approaching its instability point.

IV. GREY WOLF OPTIMIZATION IN BRIEF

Grey wolf (*Canis lupus*) optimization algorithm is a new swarm intelligence algorithm technique which is population based and was first introduced by Mirjalili [14] in 2014. GWO algorithm is based on leadership and hunting behaviour of Grey wolf. They live in group and leader of the group is Alpha. The alpha wolf is responsible for taking any decision and it is also known as dominant wolf because his order is followed by the complete group. Beta is the best candidate to become Alpha if Alpha becomes old or dies. Beta acts as an advisor to the Alpha. The lowest ranking Grey wolf is Omega. Delta is just above the rank of Omega. The mathematical models of encircling, hunting and attacking are discussed below:

(i) *Encircling prey*

Mathematical model of encircling behavior is as follows:

$$\vec{D} = \left|\vec{C}.\overrightarrow{X_p}(iter) - \vec{X}(iter)\right| \tag{12}$$

$$\vec{X}(iter+1) = \overrightarrow{X_p}(iter) - \vec{A}.\vec{D} \tag{13}$$

$\vec{X}$ and $\overrightarrow{X_p}$ are the position vectors of grey wolf and prey respectively and iter is the present iteration. The $\vec{A}$ and $\vec{C}$ are coefficient vectors and they are calculated as follows:

$$\vec{A} = 2\vec{a}.\vec{r_1} - \vec{a} \tag{14}$$

$$\vec{C} = 2.\vec{r_2} \tag{15}$$

Where $\vec{r_1}$ and $\vec{r_2}$ are random vectors between 0 and 1, components of $\vec{a}$ are linearly decreased from 2 to 0 over the course of iterations. Grey wolves update its position around the prey in any random location by using equation (12) and equation (13).

(ii) *Hunting*

The mathematical model and updating of the agent's position may be formulated as follows:

$$\left.\begin{aligned} \overrightarrow{D_\alpha} &= \left|\overrightarrow{C_1}.\overrightarrow{X_\alpha} - \vec{X}\right| \\ \overrightarrow{D_\beta} &= \left|\overrightarrow{C_2}.\overrightarrow{X_\beta} - \vec{X}\right| \\ \overrightarrow{D_\delta} &= \left|\overrightarrow{C_3}.\overrightarrow{X_\delta} - \vec{X}\right| \end{aligned}\right\} \tag{16}$$

Following equations will be used to define the position of the Grey wolf during hunting.

$$\left.\begin{aligned} \overrightarrow{X_1} &= \overrightarrow{X_\alpha} - \overrightarrow{A_1}.(\overrightarrow{D_\alpha}) \\ \overrightarrow{X_2} &= \overrightarrow{X_\beta} - \overrightarrow{A_2}.(\overrightarrow{D_\beta}) \\ \overrightarrow{X_3} &= \overrightarrow{X_\delta} - \overrightarrow{A_3}.(\overrightarrow{D_\delta}) \end{aligned}\right\} \tag{17}$$

And the position of the Grey wolf is updated in the manner as shown in equation (18)

$$\vec{X}(iter+1) = \frac{\overrightarrow{X_1} + \overrightarrow{X_2} + \overrightarrow{X_3}}{3} \tag{18}$$

(iii) *Attacking prey (exploitation*

If $\left|\vec{A}\right|$>1, then best candidate solution are diverged from prey to find a fitter prey and if $\left|\vec{A}\right|$<1 forces the wolves towards the prey. After every iteration α, β and δ wolves updates their positions towards the probable positions of the prey. Grey wolves finish the hunt by attacking the prey when it stops moving. Figure 2 shows flowchart of GWO for solving Var planning problem. Here number of grey wolves has been taken as 60 and maximum iteration as 500.

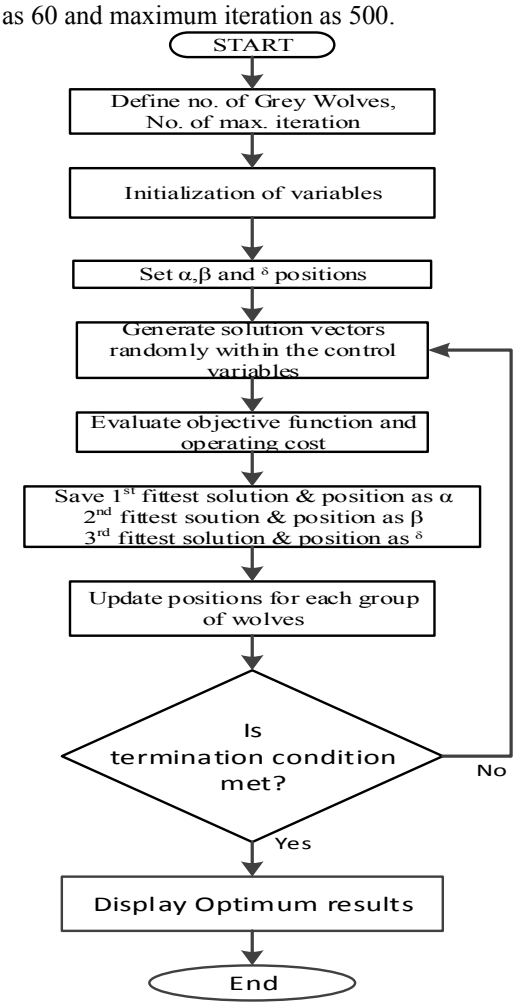

Fig. 2. Flowchart of the GWO for solving Var planning problem

V. RESULTS AND DISCUSSION

The standard IEEE 57 bus test system consists of seven generating units at buses 1, 2, 3, 6, 8, 9 and 12 interconnected with 17 transformers under load tap settings and 80 transmission lines. Bus 1 is selected as slack bus. Here number of search agents taken as 60 for GWO algorithm. The total load demand of this test system is P_{Load} = 12.5170 MW and Q_{Load}=3.3570 MW at 100 MVA base. At first weak buses are identified by using fast voltage stability index (FVSI), line stability factor (LSF), line stability index (LSI) and voltage collapse proximity indicator (VCPI) methods for the studied standard IEEE 57 bus test system. Table 1 shows weak nodes detected by different methods. After the identification of weak buses, reactive source (i.e., shunt capacitors) are installed at these weak buses. Then the proposed GWO algorithm is applied for the minimization of both active power loss and system operating cost while maintaining voltage profile within the limit. Table 2 presents active power loss and operating cost under different methods. Figure 3 shows convergence characteristics curve of active power loss for different methods. Similarly, figure 4 shows convergence characteristics curve of system operating cost for different methods. From these convergence it may be observed that VCPI method gives promising curve. Table 3 demonstrates the statistical comparison of the optimal solution for minimization of active power loss. It may be noted that after the placement of VAR sources at weak buses detected by VCPI method gives minimum active power loss as compared to other methods reported in literature.

TABLE I. DETECTION OF WEAK BUS

Method	Weak bus
FVSI	13, 15, 19, 14
LSF	46, 51, 49, 45
LSI	46, 15, 51, 43
VCPI	23, 48, 38, 39

TABLE II. ACTIVE POWER LOSS AND OPERATING COST

Method	Active Power Loss (in p.u)	Operating Cost (in $)
Planning with FVSI	0.2516	1.3226×10^{7}
Planning with LSF	0.2509	1.3188×10^{7}
Planning with LSI	0.2502	1.3148×10^{7}
Planning with VCPI	0.2489	1.3080×10^{7}

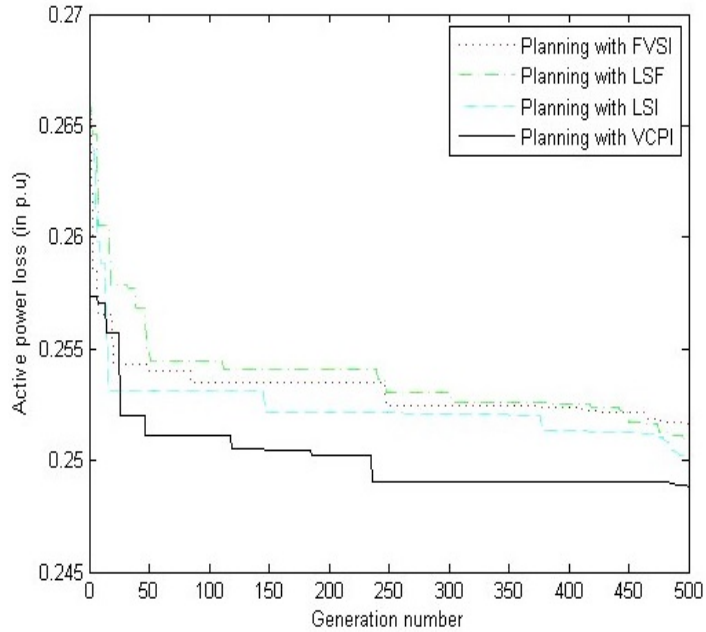

Fig. 3. Variation of active power loss

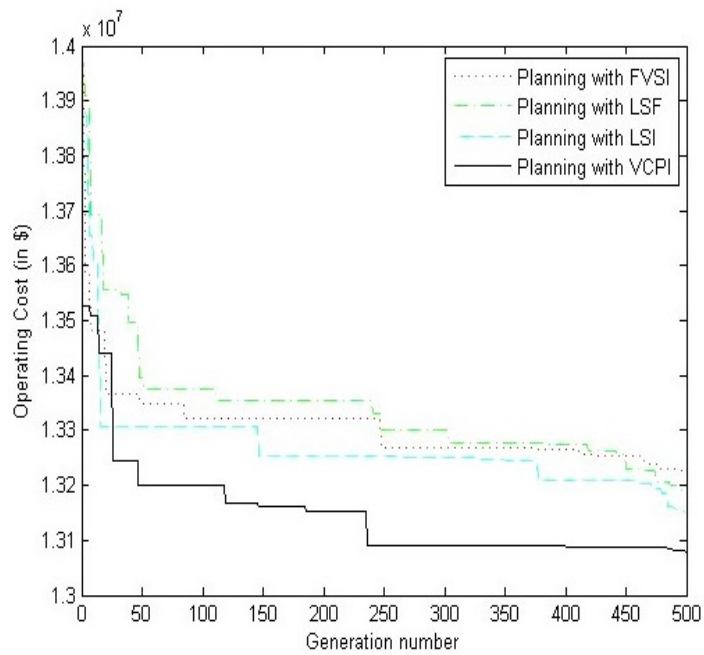

Fig. 4. Variation of Operating cost

TABLE III. COMPARATIVE SIMULATION RESULTS FOR MINIMIZATION OF ACTIVE POWER LOSS

Algorithms	Active Power Loss (in p.u)
Base Case [16]	0.28462
SPSO [15]	0.2522
APSO [15]	0.2495
EPSO [15]	0.2526
L-DE [16]	0.2781264
L-SACP-DE [16]	0.2791553
NLP [16]	0.2590231
CGA [16]	0.2524411
GWO_FVSI	0.2516
GWO_LSF	0.2509
GWO_LSI	0.2502
GWO_VCPI	0.2489

VI. CONCLUSION

In the present work different methods of weak bus detection has been presented based on the novel Grey wolf optimization method for avoiding voltage collapse and solving Var planning problem. It is observed that voltage collapse proximity indicator based detection of weak buses and optimal installation of Var sources at these buses provides best optimum result in terms of reducing active power losses and lower total operating cost of the system compared to other methods presented. To demonstrate the the superiority of the proposed GWO algorithm, results has been compared with those of some classical and meta-heuristic optimization techniques like hybrid forms of PSO, Non-linear programming (NLP) method, hybrid version of Differential evolution with self-adapting control parameters (SACP-DE) and canonical genetic algorithm (CGA). It is may also be concluded that Grey wolf optimization technique may be an effective tool for optimization such problem of power system engineering field.

REFERENCES

[1] S. S. Sachdeva, R. Billinton, "Optimal network VAR planning by nonlinear programming," IEEE Trans. Power Appar. System, PAS-92, No. 4, pp. 1217-1225, 1973.

[2] K. Iba, H. Suzuki, K.I. Suzuki, K. Suzuki, " Practical reactive power allocation/operation planning using successive linear programming," IEEE Trans. Power Syst., Vol. 3, No. 2, pp. 558-566, May 1988.

[3] A. Mohamed, G. B. Jasmon, S. Yusoff, "A static voltage collapse indicator using line stability factors," Journal of Industrial Technology, Vol. 7, No. 1, pp. 77-85, 1989.

[4] H.D. Chiang, J.C. Wang, O. Cockings, H.D. Shin, "Optimal capacitor placements in distribution systems. II. Solution algorithms and numeric results," IEEE Trans. Power Delivery, Vol. 5, No. 2, pp. 643-649, April 1990.

[5] O. O. Obadina, G. J. Berg, "Identifying electrically weak and strong segments of a power system from a voltage stability viewpoint," IEE Proc. Generation, Transmission and Distribution, Vol. 137, No. 3, pp. 205-2012, May 1990.

[6] B. Gao, G.K. Morrison, P. Kundur, "Voltage stability evaluation using modal analysis," IEEE Trans. Power Syst., Vol. 7, No. 4, pp. 1529-1542, November 1992.

[7] Y. L. Chen, C. W. Chang, C. C. Liu, "Efficient methods for Identifying weak nodes in electrical power network," IEE Proc. Generation, Transmission and Distribution, Vol. 142, No. 3, pp. 317-322, May 1995.

[8] Y. L. Chen, "Weak bus oriented reactive power planning for system security," IEE Proc. Generation, Transmission and Distribution, Vol. 143, No. 6, pp. 541-545, Nov. 1996.

[9] Y. L. Chen, "Weak Bus-Oriented Optimal Multi-objective VAR Planning," IEEE Transaction on Power Systems, Vol. 11, No. 4, pp. 1885-1890, Nov. 1996.

[10] M. Moghavvemi, F. M. Omar, "Technique for contingency monitoring and voltage collapse prediction," IEE Proc. Generation, Transmission and Distribution, Vol. 145, No. 6, pp. 634-640, Nov. 1998.

[11] M. Moghavvemi, O. Faruque, "Real-time contingency evaluation and ranking technique,"IEE Proc. Generation, Transmission and Distribution, Vol. 145, No. 5, pp. 517-524, Sep. 1998.

[12] N. Gurudinin, "Reactive power optimization using successive quadratic programming method," IEEE Trans. Power Syst., Vol. 13, No. 4, pp. 1219-1225, November 1998.

[13] I. Musirin, T. K. A. Rahman, "Novel fast voltage stability index (FVSI) for Voltage stability analysis in power system," Student Conference on Research and Development Proceedings, Shah Alam, Malaysia, pp. 265-268, 2002.

[14] S. Mirjalili, S.M. Mirjalili, A. Lewis, "Grey wolf optimizer," Advances in Engineering Software, Vol. 69, pp. 46-61, 2014.

[15] B. Bhattacharyya, S. Raj, "Swarm Intelligence based algorithms for reactive power planning with Flexible AC transmission system devices," Electrical Power and Energy Systems, Vol. 78, pp. 158-164, 2016.

[16] C. Dai, W. Chen, Y. Zhu, X. Zhang, "Seeker optimization algorithm for Optimal reactive power dispatch," IEEE Transactions on Power Systems, Vol. 24, No. 3, pp. 1218-1231, Aug. 2009.

APPENDIX

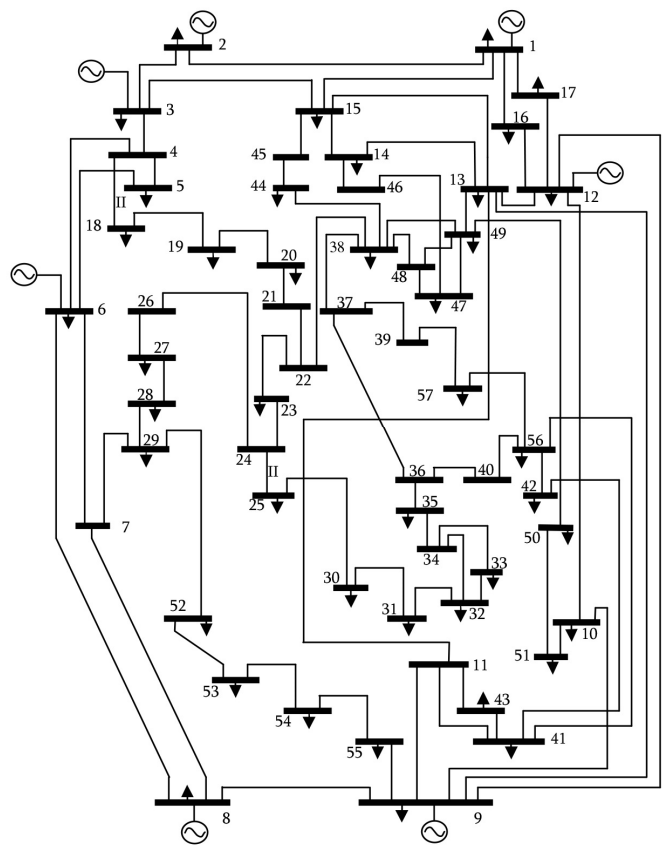

Fig. 5. Single line diagram of the studied IEEE 57 test bus system.