Wide Area Adaptive Neuro Fuzzy STATCOM Controller for Dynamic Stability Enhancement

Aman Ganesh
MMU, Mullana
Ambala, India

Ratna Dahiya
NIT Kurukshetra
Kurukshetra, India

G.K. Singh
IIT Roorkee
Roorkee, India

Abstract— **The objective of this paper is to develop an adaptive intelligent controller for STATCOM installed in multimachine system to damp inter area low frequency oscillations over wide operating range using wide area signals. The paper highlights the hybrid tunable controller where the performance of well designed Takagi-Sugeno fuzzy controller is enhanced by using the same training data that is used for designing a neural controller. Based on back propagation algorithm and method of least square estimation the fuzzy inference rule base is tweaked according to the data from which they are modeled. Thus leading to better system identification and providing better control characteristics. Based on eigenvalue sensitivity the wide area signals are selected as input to the hybrid controller. The effectiveness of the proposed controller is tested on IEEE 12 bus benchmark system and is compared with the conventional fuzzy and neural controller where all the controller are fed with selected wide area signals.**

***Index Terms*— STATCOM, hybrid controller, adaptive neuro fuzzy controller, interarea low frequency oscillation, wide area signals**

I. INTRODUCTION

Power system besides being a complex nonlinear system owing to the presence of generator, stressed transmission lines and intruding renewable sources is also a non stationary system owing to the presence of various uncertainties arising due to change in operating conditions and network configurations. Such dynamic disturbances can trigger oscillations. Dominant inter area swing modes are associated in large power systems which appear as the system loading is varied across the weak transmission links [1]. Such oscillation may make the power system unstable which may lead to partial or total power interruption.

Locally tuned power system stabilizer (PSS) which are conventionally equipped with each generator [2] in the multimachine system fails to damp interarea oscillations since they are tuned for fixed operating conditions and they use local signals as inputs. Wide area signals available through phasor measurement units (PMU) have also been used as stabilization signals for PSS controllers [3]. Control schemes based on linear phase compensation technique based PSS controller and non-linear controller based on Linear matrix inequality (LMI) and H∞ technique employing wide area signals have also been suggested in literature [4-6] to damp interarea oscillations. Flexible AC controllers (FACTS) are installed in power system for regulating the active and the reactive power flow using the series, shunt or series-shunt compensators are also used for damping oscillations either using the direct or the supplementary controller. Static synchronous compensators (STATCOM) besides working as usual bus voltage controller are also used to enhance dynamic stability by using supplementary controller [7-9]. Supplementary linear PI control have been implemented as external controller using the local signal for the STATCOM [7] to damp low frequency inter area oscillation in single machine infinite bus system. A coordinated linear control scheme employing the local signals as the input for both the PSS and STATCOM damping controller [8-9] was also proposed for damping local oscillations. Such controllers were designed to operate for fixed operating conditions. But since power system is non stationary system because of numerous possibilities such as load variation or line outage etc. hence operating conditions also varies. Hence it is neither desirable nor economical to design or implement a controller for a single or particular operating condition.

Intelligent controllers based fuzzy logic control and artificial neural network have been used in designing supplementary controller for STATCOM to damp the inter area oscillations [9-16]. Since such controllers employs multimodal approach which is capable to explain the global behavior of the control system. So such controllers provide damping over wide operating range.

For the fuzzy system the choice and selection of membership function greatly affects the effectiveness of the fuzzy interface system, which solely depends upon the user's prior knowledge of the system to be controlled [17]. The fuzzy inference engine can be made more effective if its membership functions and/or the rule base are tuned as per single modal approach thus generating an array of training data and adding to the degree of freedom and controllability [18]. The advantage of such adaptive fuzzy system is that the inference system can easily curve fit with relatively small training data by tweaking the rule base in comparison to neural network

978-1-4799-5141-3/14/$31.00 ©2016 IEEE

based controller which needs large data set for training and adaptation.

The adaptive controller thus derived or developed gives enhanced performance in comparison to singular fuzzy or neural controller. Such controller have an added advantage that they are easy to build and easy to modify according to small data samples thus making it to perform well under varying operating points or conditions.

Although adaptive controller have been implemented with both local and global signals but the adaptation process was made for the membership function [10-16] and secondly, the controller output was given to both the automatic voltage regulator and STATCOM controller but in this paper the rule base of the zero order TS fuzzy system is made to adapt and secondly the controlled output is fed only to the adaptive STATCOM supplementary controller, while the AVR and PSS are locally fed this reducing the complexity. The effectiveness of the proposed scheme is tested on IEEE 12 bus benchmark system for different operating conditions and the performance comparison is done against fuzzy and neural network based wide area supplementary controller.

II. STATCOM STRUCTURE

A STATCOM is basically a voltage source converter (VSC) connected through a low leakage reactance to the transmission line at the point of common coupling (PCC). The comprehensive STATCOM control scheme is shown in Fig.1.

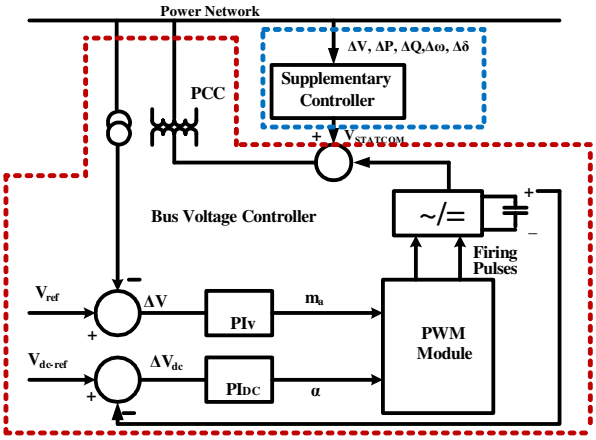

Fig. 1. Comprehensive STATCOM Internal and External Control Scheme

The conventional decoupled control scheme based on synchronous reference frame theory is used to regulate the voltage at the PCC. The control is achieved with the help of simple PI controller which is employed for both the dc link voltage control (PI_{DC}) and for line voltage control (PI_V). The PWM switching of the VSC is controlled by the modulation index m_a and the phase shift α which is computed as the output of the PI controllers as per the deviation in the dc link voltage and line voltage respectively.

For improving the dynamic stability of the power system external supplementary controller for STATCOM employing different feedback signals available from PMUs is used.The control signal generated by the supplementary controller supplements the usual bus voltage controller.

III. WIDE AREA DAMPING CONTROLLER DESIGN

A. Test Case

To validate the performance of the proposed scheme IEEE 12 bus benchmark system shown in Fig. 2 is selected. It is divided into three areas. Generator G2 along with buses 1,2,7, 9 and 10 are in area 1 while area two consist of buses 3-5, 8 and 11 along with generator G3. Area three consist of buses 6 and 12 and generator G4. One tie line group connects area 1 and 2 through buses 7-8 and 2-5. The second tie line group 1-6 and 6-4 interconnect the three areas. From the load flow studies it was observed that area 2 is the weakest and voltage support is needed at bus 4 and 5. Bus 4 is selected for

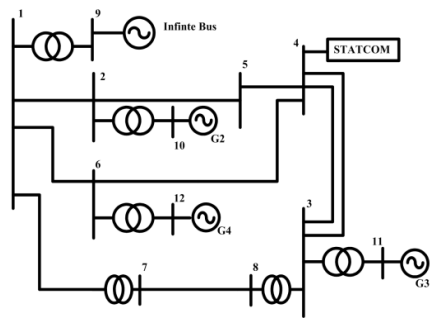

Fig. 2. IEEE 12 Bus Benchmark System

installing the STATCOM since one of the tie line at bus 4 interconnects the all three areas while bus 5 only connects area 1 and 2 only [19].

B. Selction of input stabalizing signal for Supplementry Controller

After selecting the location of the STATCOM to be installed in the selected power system the next important consideration is on the selection of the feedback signal to be used as input to the STATCOM supplementary controller. Since many signals such as bus voltage and angle, line active and reactive power, line frequency and generator speed deviation etc. are available from the installed phasor measurement unit to be used as input signal for the foresaid controller. So selection has to be done so that the selected input signal has the ability to affect the system performance and dynamics. In this paper modal analysis of the selcted power system is done using state space equations for the selection of feedback signal using participation index defined in terms of eigenvalue sensitivity based on the modal analysis of the selected power network.

The state space representation of the power system can be expressed as

$$\Delta \dot{x}(t) = A\Delta x(t) + B\Delta u(t)$$
$$\Delta y(t) = C\Delta x(t) + D\Delta u(t) \quad (1)$$

where Δx(t) represents the state vector, Δu(t) represents the input vector and Δy(t) represnts the output vector. A is the state matrix of order n with Ψi and Φi assumed to be the right and

lefteigenvector corresponding to eigenvalue λi of the state matrix A.

The participation factor denotes the eigenvalue sensitivity with respect to the diagonal element of the state matrix A. For any given eigenvalue λi the participation factor p, for the kth element is defined as Pki defined by (2)

$$p_{ki} = \phi_{ki}\psi_{ik} = \frac{\partial \lambda_i}{\partial a_{kk}} \quad (2)$$

The high value of the participation index implies better stability of the selected signal. In this paper, only the generator speed with the highest participation in the system swing mode is selected as stabilizing signal. For the selected test case of IEEE 12 Bus Benchmark System there are three modes of oscillations owing to the presence of three synchronous generators G2, G3 and G4 as shown in table I. The participation factor of each generator speed deviations Δω2, Δω3, Δω4 corresponding to the three oscillation is also shown alongwith.

TABLE II OSCILLATION MODES OF IEEE 12 BUS BENCHMARK SYSTEM

System modes	*Damping (%)*	*Frequency (Hz)*	*Participation Factor*		
			Δω2	*Δω3*	*Δω4*
-0.19 ±j4.982	3.81	0.792	0.459	0.0002	0.0021
-0.318 ± j7.436	4.27	1.183	0.0049	0.426	0.0451
-0.143 ± j4.449	3.21	0.708	0.016	0.0978	0.311

Based on participation factor Δω3 and Δω4 are selected as input for the supplementary controller for damping these local mode oscillations. Becasue Δω3 and Δω4 have prominat particiapation in mode II and mode III having the frequency 1.183 and 0.708 respectively in comprision to Δω2 which has significant particiaption only in mode I with frequency 0.792. Hence the speed deviation of generator 3 and 4 are selected as input signals.

IV. SUPPLEMENTRY STATCOM FUZZY CONTROLLER

Fuzzy controller are non-linear controller which have the ability to map the input-output relationship of the controller as defined by the expert depending upon his interpretation of the system variable and knowledge of the system process or dynamics. It can be regarded as as simple gain scheduling controller. In the present case it is implemented to enhance the dynamic stability of the power network for different operating conditions

As explained in previous section the generator speed deviations are taken as input for the supplementary fuzzy damping controller represented as vector U_i

$$U_i=[\Delta\omega 1, \Delta\omega 2,\ldots, \Delta\omega n] \quad (3)$$

Similarly the vector Y_o corresponds to STATCOM line voltage controller and synchronous generator terminal voltage

$$Y_o=[\Delta v_l, \Delta vg1, \Delta vg2 ,\ldots \Delta vgn] \quad (4)$$

If the generators of the power network are in synchronism only then the system is stable. Accordingly the selected objective function

$$Uo = [\Delta\omega_1(t) - \Delta\omega_2(t)] - [\Delta\omega_1(t-1) - \Delta\omega_2(t-1)] \quad (5)$$

The cost function involved in designing the zero order Takagi-Sugeno fuzzy inference system is to reduce the successive error between Uo i.e.

$$e_i = U_{or}(t) - U_{or}(t-1) \quad (6)$$

The dynamics of the power system can be expressed in companion form(7) since power system is nonlinear in nature as

$$\bar{y}_o^n = \bar{f}(x) + \bar{g}(x)u_i \quad (7)$$

where $U_i \in R^n$ is the control input, $Y_O \in R^n$ is the plant output, $x \in R^n$ is the state vector and $\bar{f}(x)$ and $\bar{g}(x)$ are the nonlinear function of $\bar{y}$.

So a zero order TS fuzzy system is employed to linearize the functions *f(x)* and *g(x)* having the Gaussian membership function for the antecedent part and singleton membership function as the consequent part. The centroid method is employed for defuzzification.

Let *t* be the number of applicable fuzzy rule. The pth rule for fuzzy system identifying f(x) and g(x) is of the form

Rule p: If x_i is $\bar{F}_1^p$ and x_2 is $\bar{F}_2^p$ then $\hat{f}$ is a_p

Rule p: If x_i is $\bar{G}_1^p$ and x_2 is $\bar{G}_2^p$ then $\hat{g}$ is b_p

where a_p and b_p are weights of consequent membership functions and $\bar{F}_1^p$ and $\bar{G}_2^p$ are fuzzy sets for the kth universe of discourse in the pth rule.

For the Gaussian input membership function the $\bar{F}$ and $\bar{G}$ are characterized as

$$\mu_n = diag\,[\mu_1\ \mu_2 \ldots \mu_t] \text{ and } v_n = diag\,[v_1\ v_2 \ldots v_t] \quad (8)$$

Applying the product T-norm, the antecedent value of the pth rule base for $\hat{f}$ and $\hat{g}$ are

$$\mu = \det\left| diag\left(\exp\left(-\frac{0.5(x_k - c_k^p)^2}{\sigma_k^2} \right) \right) \right|$$
$$v = \det\left| diag\left(\exp\left(-\frac{0.5(x_k - d_k^p)^2}{q_k^2} \right) \right) \right| \quad (9)$$

where the mean values are represented by *c* and *d* while the variance of the antecedent part is represented by *σ* and *q* of the fuzzy sets $\bar{F}$ and $\bar{G}$ respectively. The corresponding control surface of fuzzy controller is shown in fig 3.

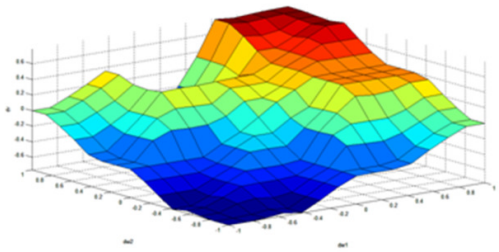

Fig. 3. Control Surface of STATCOM Fuzzy Controller

V. SUPPLEMENTRY STATCOM NEURAL CONTROLLER

A. *Neural net Structure and traing data*

The feature of generalization and adaptaibility through learning and training are unique feature of intelligent controller based on Artificial neural network (ANN). Just like fuzzy controller ANN controller can be directly used as input-output controller where learning can be made using both the online and offline method. In the present study the offline method of training is adopted for direct neural net controller. A simple two layer perceptron feed forward back propagation network using Levenberg-Marquardt training algorithm is adopted. The gradient descent with momentum weight and bias learning function is used for adaptation.

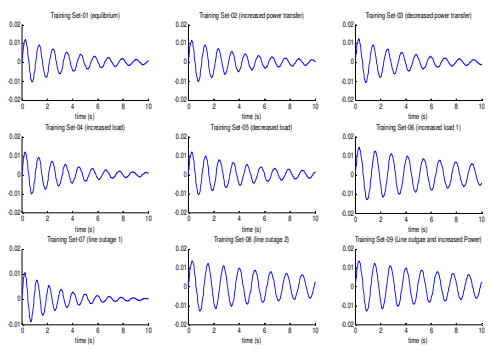

Fig. 4. Training set for ANN based STATCOM damping controller

For the offline training of the ANN based direct STATCOM damping controller training data sets are generated emulating the actual power system dynamics for varying operating conditions of power transfer, loading, line outage, fault etc. Figure 4 represents the different training sets for neural controller.

VI. WIDE AREA ADAPTIVE NEURO FUZZY CONTROLLER

The lack of any systematic design approach for configuring a fuzzy based control system including the selection of membership function and framing up of rule base is a major limitation of fuzzy system since all this is dependent upon the user or the expert knowledge. Similarly ANN controller are based on learning for which the data set is generated either offline or online.

The fuzzy based controller can be made effective if its limitation of framing up the rule base is made in accordance to the training data set available for ANN controller [18]

So the direct ANN based supplementary STATCOM controller developed in the previous section can be implemented as identifier for fuzzy controller developed in section IV.

The adaptive neuro fuzzy STATCOM supplementary controller is shown in fig. 5. The feedforward neural network consists of five layers. The membership functions as defined by (8) are first generated in layer 1 then in layer 2 their respective firing strength is generated. The normalization of the corresponding weights is carried out in layer 3 while the consequent parameters of the rule (are then computed in layer 4 and layer 5 finally computes the estimated plant.

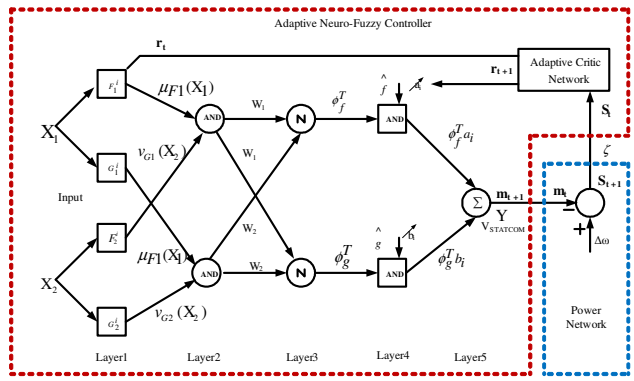

Fig. 5. Adaptive Neuro Fuzzy STATCOM supplementary Controller

The performance of the fuzzy controller is computed over a sensor sample period while interacting with power network. If at any time *t*, the power network state for given operating condition is represented by S_t driven by the STATCOM fuzzy supplementary controller action m_t. Then the current state is then evaluated by the adaptive critic network which accordingly generates a control action r_t which tweaks the rule base that is both the antecedent part ($\overline{F}$ and $\overline{G}$) and the consequent part (a_p and b_p) of the rule base and accordingly the state changes from S_t to S_{t+1} so as to effectively minimize the involved cost function (6) thus the adaptive critic network updates the reward form r_t to r_{t+1} so that the supplementary fuzzy controller generates a new control siganl/action m_{t+1}.

For a given operating condition the process is repeated till the cost function is minimized to the set tolerance level. The process of tuning the rule base is repeated for all the defined operating conditions that was used for generating the training data set for the ANN based controller as explained in section V. In this way the rule base is updated for the defined member ship function of the fuzzy system

The cost function involved in the adaptive critic network is the mean squared error function, where the error

function is same (6) as defined in the fuzzy controller design. So the relevant cost function is defined as (10)

$$\zeta t_{tot}(n_o, n_k) = \frac{1}{2} \sum_{n=n_o}^{n_k} \sum_{j \in A} e_i^2(n) \tag{10}$$

The cost function is minimized for A set of indices from the start of epoch n_o to the end of epochs n_k and n_j represents the start and end of epoch.The cost function is minimized by the adaptation of the fuzzy rule base. This is done by tuning the mean (c and d) and variance (σ and q) of the antecedent part and tuning the weights a and b of the consequent part of the fuzzy set $\overline{F}$ and $\overline{G}$ as defined in the rule base and by (9). So the developed objective function for the neural network to minimize the cost function is expressed as (11)

$$\delta_{ant} = [c_k^p \;\; d_k^p \;\; \sigma_k^p \;\; q_k^p] \text{ and } \delta_{con} = [a_p \;\; b_p] \tag{11}$$

The Levenberg Marquardt algorithm and gradient descent with momentum functions are employed for the training and adaptation of the neural network. The same functions were used for designing the neural controller as explained in section V. The fuzzy rule base parameters are updated as (12)

$$\delta_{ac}(k+1) = \delta_{ac}(k) - [J^T J + \gamma I]^{-1} J^T \tag{12}$$

where δ_{ac} represents the antecedent and the consequent part of the rule base and J is the Jacobin matrix of partial derivates of errors and is computed in negative direction as (13)

$$\delta ac_k(n) = -\eta \frac{\partial \zeta t_{ot}(n_o, n_k)}{\partial v_k(n)} \tag{13}$$

where η is the acceleration/momentum provided in each epoch for better and faster adaptation. δant an δcon are updated for each sample the process continues till the cost function reduces to user defined tolerance level which is 0.01 in the present study.

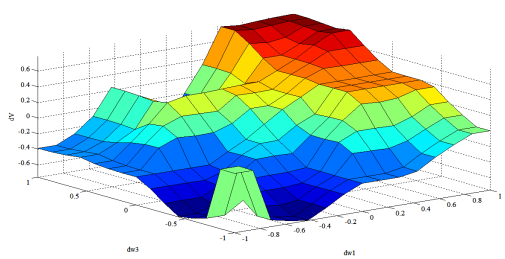

Fig. 6. Control Surface of STATCOM Fuzzy Controller

The obtained tuned fuzzy control surface is shown in fig 6

VII. Performance Analysis

The adaptive neuro fuzzy controller has been designed with the objective to effectively enhance the dynamic characteristic of the power system using wide area signals. To validate the performance of the proposed adaptive controller under different operating conditions such as (i) variation in generation/power, (ii) variation in load, (iii) line outage and (iv) line short circuits, IEEE 12 bus system is selected.

The performance of the proposed adaptive STATCOM supplementary controller is compared with Fuzzy based supplementary STATCOM controller and neural net based supplementary STATCOM controller all using the participation factor based selected generator speed deviation as input. MatLab simulations are performed using two axis classical model for generators each equipped with tuned PSS controller.

A. *Case I:Varaitaion in power*

The active power flow between area 1 and 2 is changed by altering the active power references of the two generators G2 and G3 of both the respective areas. The system settles to new steady state value. The obtained simulation results are shown in fig 7 below. The adaptive controller has better damping characteristic in comparison to fuzzy and neural based wide damping STATCOM controller.

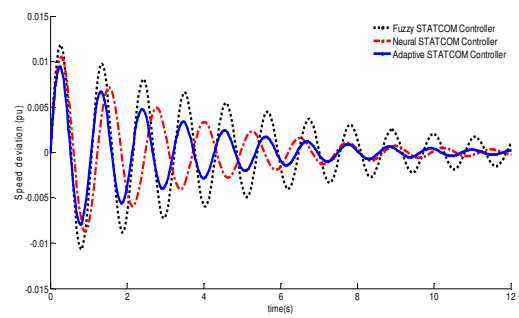

Fig. 7. Speed deviation under variation in power

B. *Case II: Load variation*

The shunt load connected at bus 4 is disconnected. The power system exhibits damped oscillation behavior while settling to new steady state value. Lesser overshoot and better damping is provided by the adaptive neuro fuzzy controller in comparison to the other two intelligent STATCOM controller as shown in fig 8.

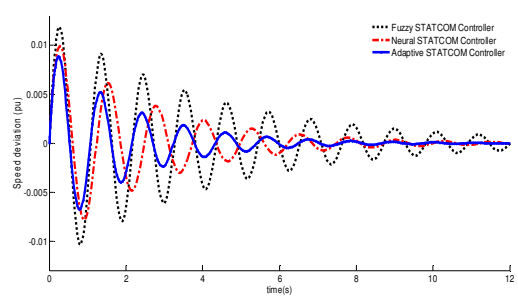

Fig. 8. Speed deviation under variation in load

C. Case III: Line outage

The controller performance has been tested for more critical condition of line outage .The network topology is undergoes major change when the transmission line 4-6 is disconnected the effect is more severe the results in more oscillations. Here also the wide area adaptive STATCOM controller provides enhanced angular stability in comparison to other fuzzy and neural net based supplementary STATCOM controllers. The results are shown in fig 9.

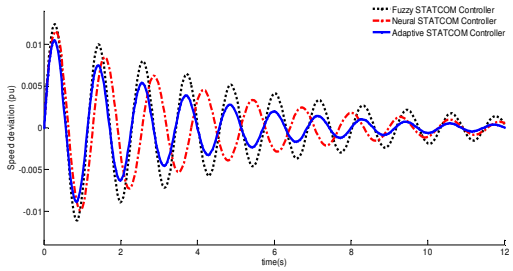

Fig. 9. Speed deviation under line outage

D. Case IV: Three phase fault

A three phase fault is applied at bus 3-4 for duration of 100ms and after that the line is disconnected. In this case also the network configuration changes and the system settles to a new

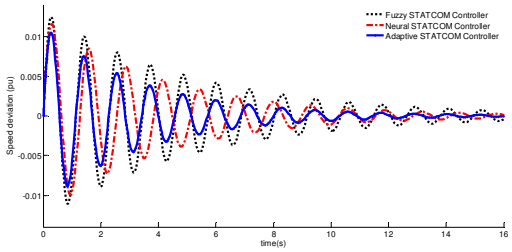

Fig. 10. Speed deviation under line outage

equilibrium point. Enhanced damping characteristics, as shown in fig. 10, are provided to the system with the help of adaptive neuro fuzzy STATCOM controller against the individual fuzzy and neural based STATCOM controllers.

VIII. CONCLUSION

This paper presents an adaptive STATCOM supplementary controller for the dynamic stability enhancement. The adaptive controller is hybrid in nature and uses neural network based tuning of fuzzy rule base of STATCOM damping controller installed in a multimachine network. The wide area stabilizing input signal for the proposed controller are selected on the basis of eigenvalue sensitivity which have maximum impact on system modes of oscillation. The validation of the control scheme is done on IEEE 12 bus system. Enhanced damping characteristics are exhibited by the adaptive neuro fuzzy controller in comparison to fuzzy and neural network based controller under varying operating conditions of power, load, fault and line outage.

REFERENCES

[1] Klein, M., Rogers, G. J. et al. ‘A fundermental study of inter-area oscillation in power systems’, IEEE Transaction on Power System, vol.6, pp. 914–921.

[2] Kundur, P. *Power System Stability and Control*, McGraw Hill, New York, 1994.

[3] Ree, J. De La, Centeno, V., James, S. Thorpe and Phadke, A . G. "Synchronized phasor measurement applications in power systems," IEEE Transaction Smart Grid, vol. 1, no. 1, pp. 20–27, 2010.

[4] Majumder R., Chaudhuri, B., Zobaidi, H. El and Pal, B.C., "LMI approach to normalized H-infinity loop shaping design of power system damping controllers," Inst. Electr. Eng.—Gen., Transm., Distrib., vol. 152, no. 6, pp. 952–960, 2005.

[5] Zhang, Yang and Bose Anjan, "Design of wide-area damping Controllers for interarea oscillations," IEEE Transaction on Power System, vol. 23, no. 3, pp. 1136-1143, 2008.

[6] Padhy, B. P., Srivastava S. C. and Verma, Nishchal K., "Robust Wide-Area TS Fuzzy Output Feedback Controller For Enhancement Of Stability," IEEE Systems Journal, vol. 6, no. 3, pp. 426-435, 2012.

[7] Rohani, Ahmad and Tirtashi, M. Reza Safari, "Combined Design of PSS and STATCOM Controllers for Power System Stability Enhancement," , Journal of Power Electronics, vol. 11, No. 5, pp. 734- 742,2011.

[8] Li Wang and Dinh-Nhon Truong, "Dynamic stability improvement of four parallel-operated PMSG-based offshore wind turbine generator fed to a power system using STATCOMs," IEEE Transaction on Power Deivery, vol. 28, no. 1, pp. 111-119, 2013.

[9] Mohagheghi, S. , Venayagamoorthy, G.K. and Harley, R. G., "An adaptive Mamdani fuzzy logic based controller for STATCOM in a multimachine power system," International Conference on Intelligent Systems Applications to Power Systems , pp. 228–233, 2005.

[10] Chandrakar, V.K., and Kothari, A.G., "Comparision of RBFN and Fuzzy based STATCOM for Transient stability improvement," International Aegean conference on Electrical Machines and Power Electronics, pp. 520-525, 2007.

[11] Mohagheghi, S., Venayagamoorthy, G. K. and Harley, Ronald G., "Optimal Wide Area Controller and State predictor for a Power system,", IEEE Transaction on Power System, vol. 22, no. 2, pp. 693–705, 2007.

[12] Mohagheghi, S., Venayagamoorthy, G. K. and Harley, Ronald G., "Fully evolvable optimal neurofuzzy controller using adaptive critic designs,", IEEE Transaction on Fuzzy System, vol. 16, no. 6, pp. 1450–1461, 2008.

[13] Ray, S., Venayagamoorthy, G.K., Chaudhuri, B. and Majumder, R., "Comparison of Adaptive Critic-Based and Classical Wide-Area Controllers for Power Systems," IEEE Transaction on Systems, Man and Cybernatics- Part B Cybernatics, vol. 38, no. 4, pp. 1002-1007, 2008.

[14] Harikrishna, D., Sahu, Kamal Narayan and Srikanth, N V, "Power System Dynamic Stability Enhancement Using Fuzzy Controlled STATCOM’ Electrical and Electronic Engineering, vol. 1, No. 2, pp. 72-78, 2011.

[15] Dhal, P.K. and Rajan, C.C.A, "Transient stability improvement using neuro-fuzzy controller design for STATCOM," Interantional Conferecne on Adavances in Engineering, Science and Management, pp. 510-515, 2012.

[16] Ganesh, A., Dahiya R. and Singh G. K. "A Comparison of Novel Optimal Fuzzy and LMI Based Wide Area Controller for Stability Enhancement with STATCOM," IEEE International Conference on Recent Advances in Engineering and Computational Sciences, India,2007, pp. 1-5, 2014.

[17] Rajesekaran, K. and Pai, G.A. Vijayalakshmi Neural networks, Fuzzy logic, and GeneticAlgorithms: Synthesis and applications PHI , NewDelhi, 2004.

[18] Angelov, P. P. and Filev, D. P., "An approach to online identification of Takagi–Sugeno fuzzy models," IEEE Transaction on Syst., Man, Cybernatics. B, vol. 34, no. 1, pp. 484–498, 2004.

[19] Ganesh, A., Dahiya R and Singh G. K., "A Novel Robust STATCOM Control Scheme for Stability Enhancement in Multimachine Power System," Elektronika ir Elektrotechnika (Electronics and Electrical Engineering) vol. 20, no. 4, pp. 22-28, 2014.