# Frequency Response Improvement in Microgrid Using Optimized VSG Control

B. Rathore, S. Chakrabarti, *Senior Member*, *IEEE,* S. Anand, *Member*, *IEEE*,
Department of Electrical Engineering
Indian Institute of Technology
Kanpur, India.
bhavnar@iitk.ac.in, saikatc@iitk.ac.in, and asandeep@iitk.ac.in

***Abstract*—In the recent years, the disadvantages of the inverter based distributed energy resource, such as less inertia and lower available kinetic energy as compared to synchronous generator (SG), have been addressed by researchers. As a result, the virtual synchronous generator (VSG) or virtual synchronous machine (VSM) is suggested in literature. VSG controller allows the inverter to mimic the characteristic of the synchronous generator by emulating the swing equation of SG. In case of VSG control, one can change the parameters of swing equation in real-time to improve the transient response of the system, which is not possible in an actual synchronous machine. Based on this concept, an optimized VSG control is discussed in this paper, in which the inertia constant and damping factor are altered between two values based on relative virtual angular velocity and its rate of change. The optimized values of virtual inertia constant and virtual damping factor are obtained, by formulating, aggregated fitness function of frequency deviation and voltage deviation. Particle Swarm Optimization (PSO) technique is used to minimize the function. Lyapunov direct method is used for the transient stability analysis of the system**

***Index Terms*-- Distributed Energy Resource (DER), droop control, inertia, frequency stability, transient response, Virtual Synchronous Generator (VSG).**

## I. Introduction

A microgrid typically consists of distributed generators (DGs), energy storage units, and distributed loads that may operate in grid-connected mode or standalone mode [1]. Interconnection of various types of DGs, such as photovoltaic (PV) panels, wind turbines, fuel cells, micro turbines, and energy storage to the network are done through power electronic converters. Conventionally, power sharing among these converters in a microgrid is realized by frequency-real power and voltage-reactive power droop controllers [1]. Various modifications to droop is suggested to overcome the problems in power sharing due to unequal line impedance between sources, different response time of inertial and non-inertial sources, harmonic current sharing, and resistive line impedance [3]–[8].

Due to less inertia or negligible kinetic energy of inverter based distributed energy resources (DERs), frequency regulation and system stability are main concerns for microgrid operation [7][8]. In grid-connected operation, the main grid dominates the system dynamics due to high inertia compared to small DERs. In stand-alone mode, these DERs, and to some extent the network itself, govern the system dynamics. The synchronous generators help in reducing frequency deviation during transient condition at the expense of an increase in settling time of the oscillations because of their stored kinetic energy. The converter-interfaced DERs may not be able to supply excess current during the fault, or and regulate the system frequency, in the case of large disturbances, because of their low inertia. In stand-alone mode, when inverter based sources paired with synchronous generator operate in voltage control mode, they provide poor transient load sharing. Inverter based sources respond more quickly and shares the majority of the load demand and the synchronous generators' output power increases gradually. This poor load sharing with the limited size of the inverter based DERs affects the system frequency profile during a large load change. Researchers have suggested the various methods to improve the transient performance of microgrids. Modified droop control techniques [7]-[8], synchronverter [9], virtual synchronous generators (VSGs) [10] or virtual synchronous machines (VSMs) [11]-[18], and modified VSG control [19] are used to enhance the system inertia virtually.

A derivative of the active power in the frequency droop is suggested in [7], to avoid the confliction between the inertial and non-inertial sources to share the load demand. In [8], it is reported that instead of using an inertial source, virtually inertia is used by modifying the existing control strategy of inverters. The author suggested a modified droop characteristic as a function of the rate of change of frequency, a small value of droop coefficient is adopted during transient condition to enhance system inertia virtually when the rate of change of frequency exceeds a threshold value. This method improves the system transient stability and reduces unwanted outage of the source during a transient case. It also reduces the short-term storage requirement [8]. Other approaches to enhance system inertia virtually are reported in [11]-[18]. In these papers, the concept of Virtual Synchronous Machine (VSM) or Virtual Synchronous Generator (VSG) and synchronverter is presented. The main concept of VSM or VSG control is to mimic the steady-state as well as transient properties of a synchronous generator on an inverter.

978-1-4799-5141-3/14/$31.00 ©2016 IEEE

In [9]-[11], the complete modelling of a DER unit as a synchronous generator (SG) is used, which increases the system algorithm complexity. In [12]-[15], only the parameters of swing equation are considered to calculate the virtual rotor angle frequency and hence the modelling is easy with simple calculations. The disadvantage of a VSG or VSM technique with fix value of inertia constant and damping factor is that it takes large time to settle down or to absorb the oscillation. To obtain faster and smoother operation, one can change the parameters of swing equation in real-time, which is not possible in an actual synchronous machine. This feature of VSG control is used to introduce adaptive virtual inertia based VSG control. An alternating moment of inertia scheme is suggested to improve the transient response during sudden load changes [19]. Based on the relative virtual angular velocity and its rate of change, the value of the virtual moment of inertia is altered between two values [19].

The swing equation expresses that the value of a damping factor also plays an important role together with inertia constant to improve the transient response. The alternating moment of inertia based VSG control becomes more advantageous if the damping is added in the controller because it helps to absorb the oscillation. A VSG controller, with alternating virtual damping factor and alternating virtual inertia constant is proposed in this paper. Maximum values of inertia constant and damping factor are used during acceleration period to reduce acceleration time and minimum values are considered during deceleration period to boost the deceleration. It is observed that in the case of VSG control, during sudden load change, there is a drop in the terminal voltage similar to SG due to the presence of virtual inertia. Inertia in SG and virtual inertia in VSG do not allow them to supply the power to load during a sudden change. A large amount of current flows, resulting drop in terminal voltage because of output impedance between the inverter and PCC terminal. In this scheme, the optimal maximum and minimum values of virtual inertia constant and virtual damping factor are obtained by using Particle Swarm Optimization (PSO) technique.

The arrangement for basic VSG control and droop control is given in Section II. The concept of VSG control having maximum and minimum values for both virtual inertia constant and virtual damping factor is given in section III. Problem formulation and its solution using PSO is discussed in section IV. In Section V, the simulation results for a sample microgrid structure are compared for proposed control, droop control, and alternating inertia constant based VSG using MATLAB/Simulink environment. Finally, the conclusion is drawn in Section VI.

## II. Principle of Droop and VSG Control

In a microgrid, having both an inverter and synchronous generator based distributed sources; the power-sharing is realized using either droop control [2] or VSG control [11]. In droop control, frequency and magnitude of the PCC voltage are regulated by adjusting real power, $P$ and reactive power, $Q$ of the inverter independently, according to the droop equations as given below [4].

$$\left(\omega_{ref} - \omega_g\right) = k_p\left(P - P_{ref}\right) \tag{1}$$

$$\left(v_{ref} - v\right) = k_q\left(Q - Q_{ref}\right) \tag{2}$$

where, $\omega_{ref}$ and $v_{ref}$ are the rated frequency and rated voltage of the system, respectively. $P_{ref}$ and $Q_{ref}$ are the set points for the real and reactive power of the inverter, respectively. $k_p = \Delta\omega / P_{max}$, is the active power droop coefficient and $k_q = \Delta v / Q_{max}$, is the reactive power droop coefficient [4]. $P_{max}$ and $Q_{max}$ are the rated active and reactive power of the inverter, and $\Delta\omega$ and $\Delta v$ are the allowable variation ranges in frequency and voltage magnitude, respectively.

As inverter based sources respond more quickly and share the majority of the load demands as compared to synchronous generators, when paired with SG in islanded mode. This poor load sharing with limited size of inverter based DER affects the system frequency profile during a large load change. As a result VSG method is suggested to maintain the microgrid stability while increasing the integration of inverter based DERs. The block diagram of VSG control is shown in Fig. 1. Here VSG control block emulates the swing equation to increase the system inertia virtually. PWM scheme is used to generate the firing pulse for the DER unit and frequency detector is used to continuously track the frequency of PCC point.

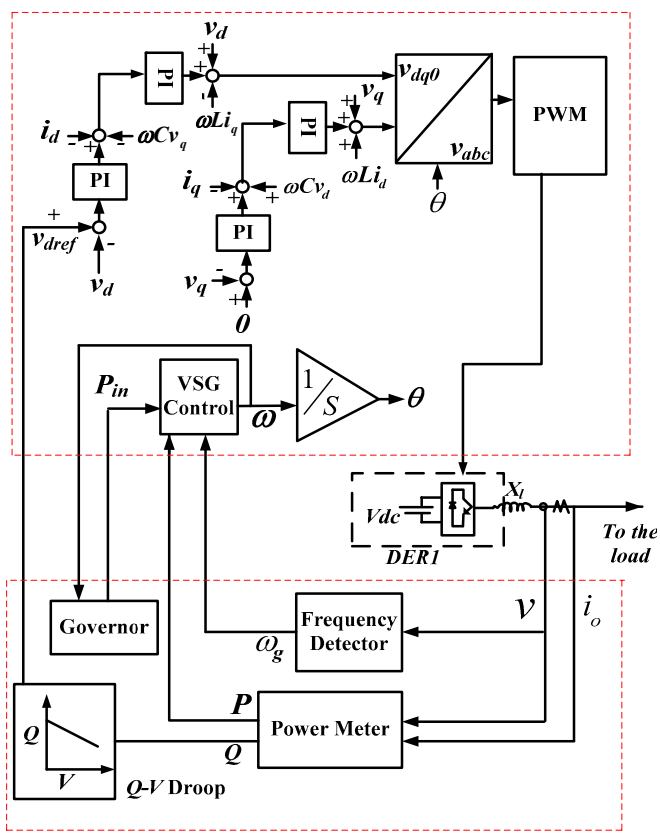


Fig. 1. VSG control of inverter

In the VSG control, according to the swing equation of synchronous generator, virtual inertia is embedded into the control of inverter based DER to emulate the inertial nature of the synchronous generator. The active power-frequency control of VSG is expressed as [17],

$$2H_V \frac{d\omega}{dt} = \left(P_{in} - P\right) - K_{d,V}\left(\omega - \omega_{ref}\right) \quad (3)$$

where, $H_V$ is the virtual inertia constant. $P_{in}$, the virtual input power to the shaft, $P$ is the active power supplied by the DER, $\omega$ is the virtual rotor angular frequency, and $K_{d,V}$ is the virtual damping factor constant. When the inverter based DER paired with a synchronous generator, is operated in voltage control mode, it should be able to support the frequency of system for the stable operation of the microgrid. Therefore, droop characteristic is introduced into the active power-frequency control block and given by (1).

From (1) and (3), the virtual governor model is obtained, and the virtual angular frequency of the output voltage in VSG control can be obtained by taking integration of (4) [17].

$$\left[\frac{1}{k_p}\left(\omega_{ref} - \omega_g\right) + \left(P_{ref} - P\right) - K_{d,V}\left(\omega - \omega_g\right)\right]\frac{1}{2H_V} = \frac{d\omega}{dt} \quad (4)$$

## III. VSG Conrol With Dynamic Inertia and Damping Coefficients

During a sudden change in load and faulty condition, there will be an oscillation in the output frequency and power of VSG control, similar to a synchronous generator. The transient tolerance limit of an inverter-based DER is restricted due to its lower inertia and less kinetic energy as compared to SG. To obtain faster and smoother operation, the swing equation parameters of VSG control can be changed in real time, which is not possible in a real synchronous machine. To introduce adaptive virtual inertia and alternating inertia based VSG control is used [19]. An alternating inertia constant and alternating damping factor based VSG is suggested in this paper. The values of the virtual inertia constant and virtual damping factor are dynamically modified in this scheme by considering the sign of relative virtual angular velocity and its rate of change.

In Fig. 2, when a sudden change in prime mover is introduced from $P_{in}$ to $P_{in1}$, the operating point oscillates from point '$a$' to '$c$' and then from '$c$' to '$a$' along the power curve. Four segments are considered in each cycle of the oscillation, and summarized in Table I. The proposed control technique is shown in Fig. 3, it is similar to VSG method with additional control block. The acceleration or deceleration mode of operation in each segment is decided by the sign of the $d\omega/dt$ along with the sign of the Δω.

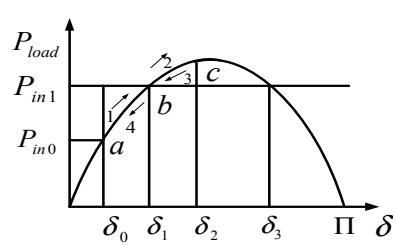


Fig. 2. Power-angle curve for a synchronous machine

TABLE I. Modes Of Operation

| Segment | Δω | $d\omega/dt$ | Mode | $H_V$ | $K_{d,V}$ |
|---|---|---|---|---|---|
| $a \to b$ | $\Delta\omega > 0$ | $d\omega/dt > 0$ | Accelerating | High | High |
| $b \to c$ | $\Delta\omega > 0$ | $d\omega/dt < 0$ | Decelerating | Low | Low |
| $c \to b$ | $\Delta\omega < 0$ | $d\omega/dt < 0$ | Accelerating | High | High |
| $b \to a$ | $\Delta\omega < 0$ | $d\omega/dt > 0$ | Decelerating | Low | Low |

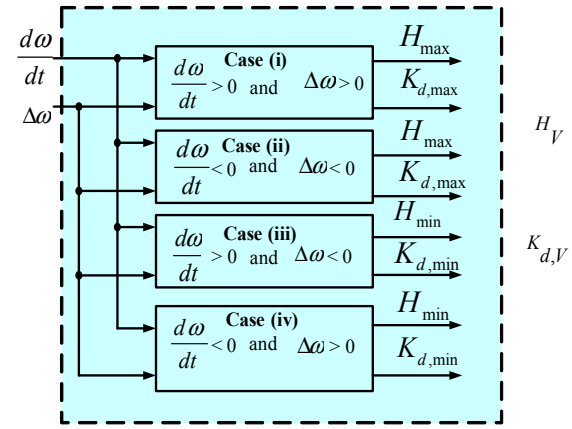


Fig. 3. Control logic

The main function of the proposed controller is to damp out frequency oscillation quickly, by monitoring the acceleration or deceleration period, and providing the values of virtual inertia constant and damping factor.

- During any transient condition, the rotor angle deviation in the SG is restricted by its inertia constant. In a similar way, the frequency deviation or voltage angle deviation of the output voltage of DER unit is reduced by using virtual inertia concept. It can easily understand by the swing equation (3), according to that one can consider that the rate of change of virtual angular frequency is inversely proportional to the inertia constant $H_v$ in VSG control.
- Based on this fact, a maximum value of $H_v$ is used during acceleration phases ('$a$' to '$c$' and '$c$' to '$b$') to reduce the acceleration and a minimum value is considered in '$b$' to '$c$' and '$b$' to '$a$' segments to boost the deceleration.

Oscillations in the SG can also reduce by introducing the damping; it also helps to reduce the settling time. Similar to alternating inertia concept, maximum and minimum values of the damping factor are used during acceleration periods ('$a$' to '$c$' and '$c$' to '$b$') and deceleration periods ('$b$' to '$c$' and '$b$' to '$a$'), respectively.

Due to the presence of inertia and damping in SG and virtual inertia and virtual damping in VSG, they do not permit sudden injection of power to the load. A large amount of current flows, resulting in a drop in the terminal voltage because of the output impedance between the inverter and PCC terminal. Therefore, in this paper, the values of virtual alternating inertia constant and virtual alternating damping factor are obtained by formulating minimization problem of aggregated function of frequency deviation and voltage deviation using Particle Swarm Optimization (PSO)

technique. After offline PSO analysis, the obtained maximum optimal values of $H_v$ and $K_{d,V}$ are chosen as $H_{max}$ and $K_{d,max}$ respectively to reduce acceleration and minimum values $H_{min}$ and $K_{d,min}$ are used to boost deceleration.

## IV. Optimization Problem Formulation And PSO Algorithm

As discussed in previous section, the inclusion of virtual inertia and virtual damping factor in VSG control results in improvement of the frequency response at the cost of decrement in the terminal voltage during sudden load switching. Therefore, it is necessary to find out the optimal values of virtual inertia and virtual damping factor to get a compromised solution for frequency and voltage improvement. This is achieved by minimizing the aggregated weighted function of, square of frequency deviation and square of voltage deviation. Here, the minimization problem is multi-objective non-convex type, therefore evolutionary optimization techniques should be used. Compared to the other evolutionary optimization strategies the attributes of the PSO is simpler to implement with fewer parameters to tune up in finding a number of high quality solution [20]. PSO is more efficient in maintaining the diversity of the swarm, since each particle uses the information related to the most effective particle in order to improve them. Using PSO, the obtained optimal values are considered as high values for damping factor and inertia constant. There are two objective functions, which helps to define main objective function are given by,

$$f_1(H_V, K_{d,V}) = \Delta\omega^2 \text{ and } f_2(H_V, K_{d,V}) = \Delta V^2 \tag{5}$$

As these two problems converge for two different values of $H_v$ and $K_{d,V}$, and do not provide a common solution for the suggested control, aggregated weighted function of these two functions is considered as main function,

$$\min(J) = w_1 f_1(H_V, K_{d,V}) + w_2 f_2(H_V, K_{d,V}) \tag{6}$$

subject to:

$$2 < H_V < 10 \text{ and } 100000 < K_{d,V} < 950000$$

Both weight factors $w_1$ and $w_2$ are decided on the basis of the individual impacts and importance of the particular index on the frequency deviation. The main aim is to minimise the overall function. So the $f_1$ gets the highest weight of 0.85 and $f_2$ gets lowest weight of 0.15.

Optimal values of the virtual inertia constant and virtual damping factor, found after execution of PSO algorithm, considered as constants values for VSG control. For alternating virtual inertia constant and virtual damping factors the optimal values of $H_v$ and $K_{d,V}$ are considered as $H_{max}$ and $K_{d,max}$, respectively. And the observed smallest values of $H_v$ and $K_{d,V}$ after offline PSO analysis are considered as $H_{min}$ and $K_{d,min}$, respectively.

## V. Transient Stability Assesment By energy Function Analysis

The main concern of transient stability is to maintain the rotor angle of SG under synchronism (and reduce the angle and frequency deviation of terminal voltage of inverter in case of VSG), when a large disturbance is introduced, such as sudden large load change, fault, islanding, etc. Lyapunov direct method may use for the transient stability analysis of the system [21]. In Lyapunov method, a system can be considered a set of nonlinear differential equation, and expressed as;

$$\dot{\boldsymbol{y}} = \boldsymbol{f}(\boldsymbol{y}) \tag{7}$$

where, $\boldsymbol{y}$ is a state variable vector and $\boldsymbol{f}(\boldsymbol{y})$ is system function. The equilibrium point of such system is obtained as;

$$\boldsymbol{f}(\hat{\boldsymbol{y}}) = 0 \tag{8}$$

here, $\hat{\boldsymbol{y}}$ is the equilibrium point. From initial point to equilibrium point the solutions of the system forms a trajectory. According to Lyapunov stability theorem, a system is asymptotically stable if;

1) The trajectory reaches at the equilibrium point of the system as time, $t \to \infty$.
2) A continuous differentiable function $\boldsymbol{E}(\boldsymbol{y})$ should exist,
3) $\dot{\boldsymbol{E}}(\boldsymbol{y}) \le 0$.

For the transient stability analysis of a synchronous generator, an energy function is calculated at the first equilibrium point '*b*' of the power-angle curve as shown in Fig. 2, by integration of a function, obtained by multiplying the swing equation with ω (removing damping factor). The energy function is given by [19],

$$E = E_k + E_p = \frac{1}{2}\omega_0 2H_V \Delta\omega^2 - \left[P_{in}(\delta - \delta_1) + B(\cos\delta - \cos\delta_1)\right] \tag{9}$$

where, $E$ is the transient energy function of the system after a change in input shaft power at point '*b*' shown in the power-angle curve. $E_k$, is the kinetic energy and virtual kinetic energy in SG and VSG, respectively. $E_P$, is the potential energy stored in the system. In [20], it is shown that $E$ satisfies the Lyapunov function criteria. In proposed method an assumption is made; $H_v > 0$ and $K_{d,V} > 0$. At point '*b*' all the transient energy is in the form of kinetic energy as ω increases and $(\delta - \delta_1)$ decreases with large values of $H_v$ and $K_{d,V}$. At this point, the values of $H_v$ and $K_{d,V}$ are switched to minimum values. Therefore, after point '*b*' the transient in the form of kinetic energy decreases to small value with the same $\omega$ but with $H_{min}$ and $K_{d,min}$. The total transient energy is transformed in the form of potential energy at point '*c*', $H_v$ and $K_{d,V}$ adopt their large values. However, the total transient energy of the system is in the form of potential energy at point '*c*' as $\omega = 0$, and $\delta - \delta_1$ has its maximum value. Therefore, the maximum values of $H_V$ and $K_{d,V}$ do not increase energy level

of the system according to (9). This process continues in every half-cycle of oscillation until $\omega$ reaches a desired value.

To analyze the positive effect of the alternating inertia constant and alternating damping factor scheme on frequency oscillation, Lyapunov's third criteria is considered. According to it, the first derivative of energy function should be negative, which shows reduction in energy function during time until its state variables are converged at the equilibrium point of the system. For alternating $H_v$ and alternating $K_{d,V}$ based VSG, the derivative of $E$ is expressed as,

$$\frac{dE}{dt} = \frac{\omega_0}{2}\Delta\omega^2 \frac{2dH_V}{dt} + \Delta\omega^2 \frac{dK_{d,V}}{dt} \tag{10}$$

As the values of $H_v$ and $K_{d,V}$ vary discretely, the values of $dH_V/dt$ and $dK_{d,V}/dt$ are given by their average value at the points, at which $H_v$ and $K_{d,V}$ are altered dynamically.

- At points '$a$' and '$c$', $H_v$ and $K_{d,V}$ change their values from $H_{min}$ to $H_{max}$ and $K_{d,min}$ to $K_{d,max}$, respectively. But these changes do not affect the system transient energy function as $\Delta\omega$ is zero at these points.
- Whereas, at point '$b$', $H_v$ and $K_{d,V}$ varied from $H_{max}$ to $H_{min}$ and $K_{d,max}$ to $K_{d,min}$ respectively. At '$b$', $\Delta\omega$ has its maximum value and the change in inertia constant and damping factor are negative. Therefore, the terms $dH_V/dt$ and $dK_{d,V}/dt$ are effective and make the system transient energy function negative, and satisfy Lyapunov third criterion.

## VI. Results And Discussion

The microgrid, having inverter based DER and synchronous generator, is simulated using MATLAB/ Simulink software to compare the operation of proposed controller with droop control, and alternating inertia constant based VSG control. The microgrid structure used is shown in Fig. 4. Where, DER and SG operate in parallel to share the active and reactive power of the load and maintain the voltage and frequency within the allowable range at PCC. Here both R-L load and Induction motor load are considered to analyze the controller's performance under load disturbances.

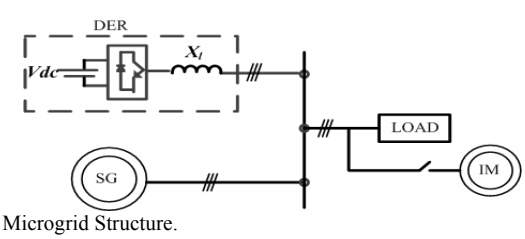

Fig. 4. Microgrid Structure.

In suggested control, at the initial stage of operation, the optimal values of virtual inertia time constant and virtual damping factor of a single unit of 85 kVA are calculated using PSO. The parameters used for the operation is given in Table II. In the operation of microgrid, an initial R-L load of 5.385 kVA with 0.92 lagging power factor is considered. An induction motor load with 15% loading is switched at t= 1.5 sec.

TABLE II
Parameters Used For Different Control Techniques

| Parameters | | Droop | Alternating H based VSG | Proposed |
|---|---|---|---|---|
| $k_p$ (Hz/kW) | | 2.5e-5 | 2.5e-5 | 2.5e-5 |
| $k_q$ (volt/kVar) | | 5e-4 | 5e-4 | 5e-4 |
| DER (kVA) | | 85 | 85 | 85 |
| SG (kVA) | | 8.1 | 8.1 | 8.1 |
| $V_{DC}$ (Volt) | | 700 | 700 | 700 |
| IM Load (kW) | | 7.5 | 7.5 | 7.5 |
| R-L Load (kVA) | | 7.35 | 7.35 | 7.35 |
| $V_{LL}$ (rms) | | 415 | 415 | 415 |
| $H_V$ (sec) | $H_{max}$ | - | 7.6 | 7.6 |
| | $H_{min}$ | - | 4.2 | 4.2 |
| $K_{d,V}$ (Nm/(rad/s)) | $K_{d,max}$ | - | 9.12e5 | 9.12e5 |
| | $K_{d,min}$ | - | - | 3e5 |

Fig. 5, shows the frequency response of the system for droop control, alternating H based VSG control, and for proposed control. It is observed that the frequency deviation just after the $t$= 1.5 sec is more in alternating $H$ based VSG control as compared to proposed VSG control and lesser than droop control. The proposed control has large settling time as compared to droop control because of virtual inertia and virtual damping factor, which makes its response slow. The droop control has large peak overshoot in frequency during switching of IM due to its fast action to supply the load demand. IM with 15 % loading is switched to see the transient performance of the controllers. As the total active power change is less, there is no significant change in steady state frequency.

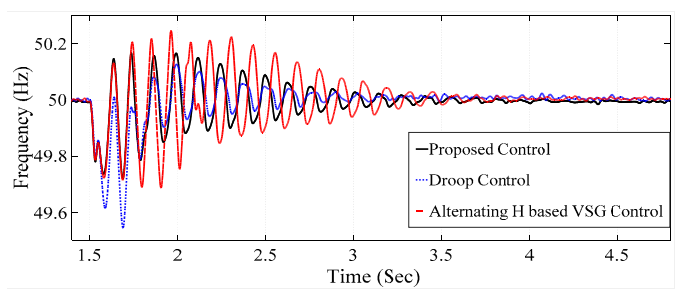

Fig. 5. Frequency response for different control schemes under disturbances.

Fig. 6 shows the power injected by the DER unit for different control schemes. In all the schemes, at t = 1.5 sec the power injected by DER unit is very high because IM requires a large amount of current during starting (approximately 5 to 7 times of full load current). It is observed that in alternating virtual inertia based VSG and proposed control schemes, the injected powers take the larger time to reach the steady-state level as compared to droop control. After few seconds, it is observed that peak overshoot in the power is the largest in alternating inertia based VSG control. It also takes the large settling as compared to droop

control and proposed control. From the result, one can conclude that proposed control has less frequency deviation with reasonable settling time. Table III summarizes the simulation results.

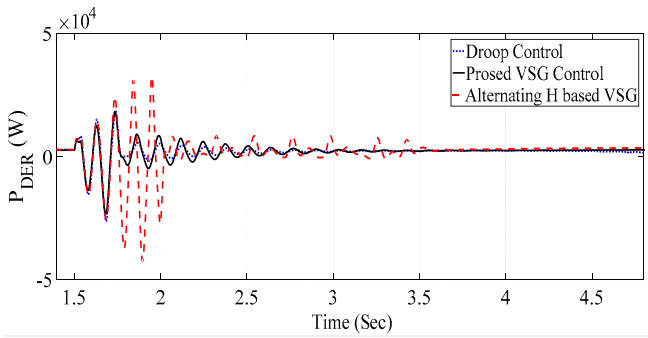


Fig. 6. Injected active power by the DER for different control schemes

TABLE III
SIMULATION RESULTS FOR DIFFERENT CONTROL

| PARAMETERS | Max. freq. deviation (Hz) | Settling Time (sec) |
|---|---|---|
| Droop | 0.47 | 2.1 |
| Alternating H based VSG Control | 0.34 | 2.9 |
| Proposed Control | 0.28 | 2.6 |

## VII. CONCLUSION

A microgrid consisting of a VSC based DER unit with SG is considered and is simulated in MATLAB/Simulink environment. The results show that by emulating swing equation in controller to enhance system inertia, the DER unit allows it to share the large amount of load, with reduced frequency deviation at the cost of large settling time. The alternating virtual inertia constant and alternating virtual damping factor based scheme adopts the appropriate values of the inertia constant and damping factor of the VSG during acceleration/deceleration period in each cycle of oscillation. From the results it is observed that proposed scheme having lesser frequency deviation during transient condition as compare to alternating inertia based VSG and droop control.

## ACKNOWLEDGMENT

The authors would like to thank the Department of Science and Technology, New Delhi, India for providing financial support to carry out this research work under project no. DST /EE /2016137.

## REFERENCES

[1] R. Majumder, " Some Aspects of Stability," *IEEE Trans on Power Sys.*, vol. 28, no. 3, August 2013.

[2] A. Engler and N. Soultanis, "Droop control in LV-grids," *in Proc. Int. Conf. Future Power Syst.*, 2005, pp. 1–6.

[3] J. M. Guerrero, J. Matas, V. L. Garcia de, M. Castilla, and J. Miret, "Decentralized control for parallel operation of distributed generation inverters using resistive output impedance," *IEEE Trans. Ind. Electron*., vol. 54, pp. 994–1004, 2007.

[4] J. M. Guerrero, L. García de Vicunaa, J. Matas, M. Castilla, and J. Miret, "Output impedance design of parallel-connected UPS inverters with wireless load-sharing control," *IEEE Trans. Ind. Electron.*, vol. 52, no. 4, pp. 1126-1135, Aug. 2005.

[5] A. M. Salamah, S. J. Finney, and B. W. Williams, "Autonomous controller for improved dynamic performance of AC grid, parallel-connected, single-phase inverters," *IET Gen., Transm., Distrib.*, vol. 2, no. 2, pp. 209–218, 2008.

[6] K. Debrabandere, B. Bolsens, J. Van den Keybus, A.Woyte, J. Driesen, and R. Belmans, "A voltage and frequency droop control method for parallel inverters," *IEEE Trans. Power Electron.*, vol. 22, no. 4, pp. 1107-1115, Jul. 2007.

[7] R. Majumder, A. Ghosh, G. Ledwich, and F. Zare, "Power Sharing and Stability Enhancement of an Autonomous Microgrid with Inertial and Non-inertial DGs with DSTATCOM," *Third International Conference on Power Systems*, pp. 1-6, 2009.

[8] N. Soni, S. Doolla, "Improvement of Transient Response in Microgrids Using Virtual Inertia," *IEEE Trans on Power delivery*, vol. 28, no.3, July 2013.

[9] Y. Xiang-Zhen, S. Jian-Hui, D. Ming, L. Jin-Wei, and D. Yan, "Control strategy for virtual synchronous generator in microgrid," in *Proc. 4th Int. Conf. Elect. Utility Dereg. Restruct. Power Technol.*, 2011, pp. 1633-1637.

[10] Q.C. Zhong and G. Weiss, "Synchronverters: Inverters that mimic synchronous generators," *IEEE Trans. Ind. Electron.*, vol. 58, no. 4, pp. 1259–1267, Apr. 2011.

[11] J. Driesen and K. Visscher "Virtual synchronous generators," in Proc. IEEE Power Energy Soc. Gen. Meeting - Convers. Del. Elect. Energy 21st Century, 2008, pp. 1-3.

[12] H. P. Beck and R. Hesse, "Virtual synchronous machine," *in Proc. IEEE EPQU Conf.*, 2007, pp. 1–6.

[13] M. P. N. Van Wesenbeeck, S. W. H. De Haan, P. Varela, and K. Visscher, "Grid tied converter with virtual kinetic storage," in *Proc. IEEE Powertech Conf.*, 2009, pp. 1-7.

[14] J. Meng, X. Shi, Y. Wang and F. Chao, " A Virtual Synchronous Generator Control Strategy for Distributed Generation," *China International Conference on Electricity Distribution( CICED)*, pp.495-498, September- 2014.

[15] Jia Liu, Y. Miura, and T. Ise, "Dynamic characteristics and stability comparisons between virtual synchronous generator and droop control in inverter-based distributed generators," in *Proc. Int. Power Electron. Conf. (IPEC-Hiroshima)*, 2014, pp. 1536-1543.

[16] M. Torres and L. A. C. Lopes, "Virtual synchronous generator control in autonomous wind-diesel power systems," in *Proc. IEEE Elect. Power Energy Conf.*, 2009, pp. 1-6.

[17] T. Shintai, Y. Miura, and T. Ise, "Oscillation damping of a distributed generator using a virtual synchronous generator," *IEEE Trans. Power Del.*, vol. 29, no. 2, pp. 668-676, Apr. 2014.

[18] D. Yan, J. M. Guerrero, L. Chang, J. Su and M. Mao, "Modelling, Analysis, and Design of a frequency- Droop Based Virtual Synchronous Generator for Microgrid Application," *ECCE Asia Downunder (ECCE Asia )*, pp: 643 – 649, 2013.

[19] J. Alipoor, Y. Miura, and T. Ise, "Power system stabilization using virtual synchronous generator with alternating moment of inertia," *IEEE J. Emerg. Sel. Topics Power Electron.*, vol. 3, no. 2, pp. 451-458, Jun. 2015.

[20] Y.D. Valle, G.K. Venayagamoorthy, S. Mohagheghi, J.C. Hernandez, and R.G. Harley, "Particle swarm optimization: basic concepts, variants and applications in power systems," *IEEE Trans. Evolutionary Computation*, Vol. 12, No. 2, pp. 171 – 195, Apr. 2008.

[21] J. Machowski, J. Bialek, and J. Bumby, *Power System Dynamics: Stability and Control*, 2nd ed. Chippenham, U.K.: Wiley, 2008, pp. 222–230.