# A New Classification Model based on SVM for Single and Combined Power Quality Disturbances

Karthik Thirumala
Dept. of Electrical Engg.
IIT Indore
Indore, India 453552
phd1301102004@iiti.ac.in

Amod C. Umarikar
Dept. of Electrical Engg.
IIT Indore
Indore, India 453552
umarikar@iiti.ac.in

Trapti Jain
Dept. of Electrical Engg.
IIT Indore
Indore, India 453552
traptij@iiti.ac.in

***Abstract*—The simultaneous occurrence of power quality (PQ) disturbances is increased in recent times, and the detection of combined disturbances has become a pressing concern. A new model based on support vector machine (SVM) for classification of single and combined PQ disturbances is proposed in this paper. The classification of $k$ disturbances with any of the conventional multiclass SVM approaches demands the utilization of at least $k$ binary SVMs. This increase in the number of SVMs with an increase in classes will affect not only the classification time but also the recognition accuracy. The proposed classification model overcomes this limitation by employing a number of binary SVMs significantly less than the number of classes to be classified. The classification of sixteen disturbances is considered in this paper by utilizing only nine binary SVMs, which facilitates better detection of the combined disturbances with fewer computations. To validate the performance of the proposed SVM model, it has been tested on a wide variety of synthetic signals and a few real signals. Further, the results obtained are compared with the one-against-one approach based multiclass SVM technique.**

***Index Terms*—empirical wavelet transform (EWT), power quality (PQ), power quality disturbances, support vector machines (SVM).**

## I. Introduction

The term power quality (PQ) has gained a vital importance since the late 1980s [1]. The growing dependency on sophisticated fast control equipment and consistent increase in penetration of renewable energy sources have led to various PQ issues. In general, the disturbances like voltage sag, voltage swell, interruption, and transients exist only for certain duration whereas, the steady state disturbances such as harmonics, interharmonics and voltage fluctuation may continue for a longer time in the system. Besides, the events like voltage interruption, sag, and swell in the real power system are mostly associated with transients or distortion. As a result, there are greater possibilities for the simultaneous occurrence of two or more PQ disturbances, which have been noticed in the recent years. Consequently, this degradation in the quality of power due to PQ disturbances triggered an initiative for the system operators to monitor their occurrence [2], which requires an intelligent adaptive technique for automatic detection of multiple PQ disturbances.

Diagnosis of the PQ disturbances requires a preliminary analysis of the signal by a signal processing technique like fast Fourier transform (FFT), discrete wavelet transform (DWT), wavelet packet transform (WPT), empirical mode decomposition (EMD), and Stockwell transform (ST) [3]–[7]. Thereafter, the next stage is the extraction of some relevant features from the processed signals that reflect the disturbances. These features are later fed as inputs to a classifier based on decision tree (DT), fuzzy logic (FL), artificial neural network (ANN) and support vector machines (SVM), etc. [8]–[15] for classification of the PQ disturbances. The recognition accuracy depends not only on the classifier but also on the features extracted [16], which in turn relies on the decomposed frequency components. The well-known computationally efficient FFT has problems of spectral leakage, picket fencing, and loss of time information. The most commonly employed techniques for feature extraction, DWT and WPT uses pre-defined filters and thereby extracted components cover a wide band of frequencies. Further, the other shortcoming of DWT and WPT is their inability to recognize the disturbance if it is highly contaminated with noise. The other most popular technique utilized for PQ analysis is EMD, but it suffers from mode mixing problem; same is the case with ST. Therefore, the simple features extracted may not represent the characteristics of disturbance and demands for complex and novel features. Nevertheless, the well-known basic features are adequate for recognition of significant PQ disturbances if the filtering approach is adaptive and the fundamental component extracted is accurate.

The recently proposed empirical wavelet transform [17] has gained a greater attention for signal analysis in various applications because of its simple, fast and adaptive filter design procedure. The frequency estimation procedure of the EWT was modified in [18] to make it suitable for power quality analysis. However, the fixed thresholds, conceived to estimate the harmonics and interharmonics accurately, may give erroneous results for the assessment of disturbance signals of 200 ms. This can be overcome by an adaptive frequency threshold, which is estimated according to the signal amplitude modulation, as explained in section II. Therefore, a modified EWT approach termed as generalized empirical wavelet transform (GEWT) is utilized for assessment of nonstationary signals containing disturbances.

The most promising learning system, SVM employed for

978-1-4799-5141-3/14/$31.00 

classification has an additional feature of structural and experimental risk minimization [19]. Further, it changes the complex problem into a linearly separable case by mapping the features into high dimensional space. Most of the classification techniques based on SVM [13]–[15] either utilized more than five features or limited to classify at most ten disturbances. The classification of $k$ number of classes requires the construction of at least $k$ binary SVMs, which increases the computational time proportionally. Also, there are chances of misclassification if a combined disturbance is considered as a separate class, as it contains mixed characteristics of both the single disturbances. In general, there exist only eight single disturbances and all the combined disturbances comprise at least two of these single disturbances. It is observed that by taking advantage of the property of the binary SVM, any combined disturbance can be detected with two or more binary SVMs, each dedicated for a single disturbance. Hence, the proposed model employs only nine SVMs, one for each single disturbance and normal class to classify sixteen PQ disturbances. This significant reduction in the number of SVMs will decrease the computational complexity while improving the accuracy. Moreover, the number of SVMs utilized is independent of the number of the combined disturbances considered.

## II. Methodology

### A. Generalized Empirical Wavelet Transform

The step-by-step procedure of generalized empirical wavelet transform (GEWT) is as follows

1) First, apply FFT to the signal $x(n)$ and estimate the frequencies present, $f = \{f_i\}_{i=1,2..,N}$ with the help of a magnitude and frequency thresholds. The minimum magnitude threshold is set to $2\%$ of fundamental frequency magnitude, and the frequency threshold $(dF)$ is adaptively obtained as explained in the next subsection.
2) Then, segment the Fourier spectrum by finding the local minima $\Omega_i$ between two consecutive frequencies $f_i, f_{i+1}$ that separate the components perfectly.
3) Now, with these frequencies and boundaries estimated N wavelet filters (one low pass filter and N-1 band pass filters) are designed in the frequency domain using a scaling function $\phi_i(\omega)$ and empirical wavelets $\psi_i(\omega)$ [17] defined as

$$\phi_1(\omega)=\begin{cases} 1, & if\,|\omega| \le (1-\gamma)\Omega_1 \\ \cos\left(\frac{\pi}{2}\beta(\gamma,\omega,\Omega_1)\right), & if\,(1-\gamma)\Omega_1 \le |\omega| \le (1+\gamma)\Omega_1 \\ 0, & \text{otherwise} \end{cases} \tag{1}$$

and

$$\psi_i(\omega)=\begin{cases} 1, & if\,(1+\gamma)\Omega_i \le |\omega| \le (1-\gamma)\Omega_{i+1} \\ \cos\left(\frac{\pi}{2}\beta(\gamma,\omega,\Omega_{i+1})\right), & if\,(1-\gamma)\Omega_{i+1} \le |\omega| \le (1+\gamma)\Omega_{i+1} \\ \sin\left(\frac{\pi}{2}\beta(\gamma,\omega,\Omega_i)\right), & if\,(1-\gamma)\Omega_i \le |\omega| \le (1+\gamma)\Omega_i \\ 0, & \text{otherwise} \end{cases} \tag{2}$$

Where, $\beta(\gamma,\omega,\Omega_i) = \beta\left(\frac{1}{2\gamma\Omega_i}\left(|\omega| - (1-\gamma)\Omega_i\right)\right)$ is an arbitrary function, fulfilling the properties given in [17]. The parameter $\gamma$ ensures a minimal overlap between two consecutive frequency components in a transition band and its selection is based on the boundaries estimated.
4) Finally, obtain the approximate and detail coefficients using the below-defined equations

$$GEWT(1,n) = IFFT\left(X(\omega)\phi_1(\omega)\right) \tag{3}$$

$$GEWT(i,n) = IFFT\left(X(\omega)\psi_i(\omega)\right) \tag{4}$$

Thus, the time-varying mono-frequency components extracted using adaptive filters involve fewer computations.

### B. Adaptive frequency threshold

The GEWT mainly aims to extract the fundamental frequency component perfectly by decomposing the power signal into its mono-frequency components. The extraction of the fundamental component without any overlapping of its nearby frequency components is possible only if the filter design is adaptive according to the interharmonics present in the vicinity of fundamental. These interharmonics can be seen from the Fourier spectrum, but the spectral components present may be spectral leakage of the fundamental component and not necessarily the actual interharmonics. It is a known fact that the existence of low-frequency interharmonics will cause amplitude variation of the signal. Therefore, the presence of interharmonics near fundamental can be investigated from the time domain amplitude variation as well. Thus, an extensive study has been carried out to relate amplitude modulation of the signal to the frequencies present near fundamental and thereby estimate the new frequency threshold $(dF)$. The frequency threshold is nothing but the spectral separation of the fundamental frequency from its nearest frequency components. It has been realized that a signal containing an interharmonic of frequency, $f_i$ in the range of 25 to 75 Hz will cause a significant amplitude variation at a rate of $|50 - f_i|$ Hz (for the 50 Hz system). Therefore, the $dF$ can be obtained from the signal RMS variation vector ($\mathbf{SV}$) by calculating the number of sign changes $(NS)$ of the $\mathbf{SV}$ as follows.

First, compute the root mean square (RMS) value for each fundamental cycle of the input signal defined as

$$X_{rms}(i) = \sqrt{\frac{1}{S}\sum_{(i-1)S+1}^{iS} x(n)^2} \tag{5}$$

Where $i$ represents order number of signal cycles, $S$ is the number of samples in a cycle of the sampled signal $x(n)$. The RMS vector $\mathbf{X_{rms}}$ of the signal having ten values calculated for a 200 ms duration input signal is

$$\mathbf{X_{rms}} = [X_{rms}(1), ..., X_{rms}(i), ..., X_{rms}(10)] \tag{6}$$

Then the signal variation ($\mathbf{SV}$) which reflects the low-frequency interharmonics is obtained by shifting the RMS vector to the zero-axis by deducting with its mean [3] as

$$\mathbf{SV} = \mathbf{X_{rms}} - mean(X_{rms}) \tag{7}$$

Thereafter, the number of sign changes $(NS)$ is calculated for the signal RMS variation ($\mathbf{SV}$), which confirms the existence of low-frequency interharmonics. For a 50 Hz signal of

200 ms duration, the $NS < 3$ indicates that no interharmonics exist in the signal near fundamental frequency and the peaks in the spectrum are spectral leakage of the fundamental frequency due to nonstationary behavior. Hence, the $dF$ is chosen as 25 Hz to extract the fundamental component accurately. On the other hand, for a signal containing interharmonics ranging 25 Hz to 75 Hz, $NS$ is found to be varied between 3 and 9 for which the $dF$ should be chosen between 0 and 25 Hz. This is to avoid the overlap of interharmonics with the fundamental frequency component. Therefore, the equation correlating the $dF$ to $NS$ is

$$dF = (quot(NS, 2) + rem(NS, 2) - 1)\,\Delta f \tag{8}$$

Where, $\Delta f$ is the frequency resolution, which is 5 Hz in this work, $quot(NS, 2)$ is the quotient of $NS$ and 2 and $rem(NS, 2)$ is the remainder of $NS$ and 2. This procedure helps in finding out the genuine interharmonics by overcoming the problem of spectral leakage due to FFT. Since the modes extracted, contain only one frequency component, five basic features are adequate to detect the most significant disturbances.

## III. Feature Extraction

It is a fact that the features majorly influence the recognition capability of a classifier. The features extracted should be informative and able to reflect the disturbances accurately. The following five features have been chosen as inputs for the classifier.

**F1**: The feature $F1$ represents the deviation in the per cycle RMS of the signal [9]. It is computed as the difference of consecutive RMS values.

$$Sd(i) = X_{rms}(i) - X_{rms}(i-1) \tag{9}$$

Where, $X_{rms}(i)$ is $ith$ cycle RMS of the signal as defined in (5). The absolute maximum variation of the signal is considered as the first feature.

$$F1 = max\,(|\mathbf{Sd}|) \tag{10}$$

For a 200 ms window, RMS per cycle of steady state disturbances such as harmonics, interharmonics, notch, and spike remains approximately same for all cycles. Hence, this feature plays a key role in distinguishing the voltage sag, interruption, swell, voltage fluctuation and transient from the steady state disturbances.

**F2**: This feature is utilized to differentiate the fundamental magnitude based disturbances. It represents the minimum rms value of the fundamental frequency component extracted from the disturbance signal using GEWT. The RMS value of the $ith$ cycle fundamental component is defined as

$$X_{1rms}(i) = \sqrt{\frac{1}{S}\sum_{(i-1)S+1}^{iS} x_1(n)^2} \tag{11}$$

Where, $x_1(n)$ is the fundamental frequency component obtained from the GEWT. $\mathbf{X_{1rms}}$ is an RMS vector having values of all ten cycles defined as

$$\mathbf{X_{1rms}} = [X_{1rms}(1), ..., X_{1rms}(i), ..., X_{1rms}(10)] \tag{12}$$

The second feature particularly selected for classifying voltage sag and interruption is

$$F2 = min\,(\mathbf{X_{1rms}}) \tag{13}$$

**F3**: The maximum rms value of the fundamental component is required to separate the voltage swell from the rest. Hence, it is selected as one of the features

$$F3 = max\,(\mathbf{X_{1rms}}) \tag{14}$$

**F4**: This feature, high-frequency harmonic distortion (**HHD**) separates all the harmonics related signals from other class of signals.

$$HHD(i) = \frac{X_{Hrms}(i)}{X_{1rms}(i)} \tag{15}$$

Where, $X_{Hrms}(i)$ is per cycle RMS of the distorted signal $x_h(n)$ containing only components of frequency $\geq$ 300 Hz. Finally, the feature is mean of the ten **HHD** values.

$$F4 = mean\,(\mathbf{HHD}) \tag{16}$$

**F5**: This last feature is same as the pre-computed number of sign changes of signal variation vector.

$$F5 = NS \tag{17}$$

For a 50 Hz signal of 200 ms duration, $F5 \geq 3$ represents the presence of voltage fluctuation or flicker.

## IV. Classifiers

The classes are labeled as C1 - normal signal, C2 - voltage interruption, C3 - sag, C4 - swell, C5 - harmonics, C6 - flicker, C7 - oscillatory transient, C8 - notch, C9 - spike, C10 - sag with harmonics, C11 - sag with flicker, C12 - sag with transient, C13 - swell with harmonics, C14 - swell with flicker, C15 - swell with transient and C16 - flicker with harmonics.

### A. Support Vector Machines

SVM developed by Vapnik et al. is a supervised machine learning algorithm framed on statistical learning theory [19] or Vapnik-Chervonenkis theory. The potentiality of SVM lies in mapping the linearly inseparable input data to a high-dimensional feature space using kernel function $K(u_i, u_j)$. This increase in the dimensionality of the data by nonlinear feature mapping helps in constructing a linear hyperplane separating the classes. More to that the chances of misclassification are minimized by finding an optimal separating hyperplane with maximum margin i.e., the distance between the optimal hyperplane and the bounding planes. The most commonly employed kernel functions are

1) Linear Kernel: $K(u_i, u_j) = u_i u_j$
2) Polynomial: $K(u_i, u_j) = (\gamma u_i u_j + c)^d$
3) Radial basis function: $K(u_i, u_j) = exp\left(-\gamma |u_i - u_j|^2\right)$
4) Sigmoid: $K(u_i, u_j) = tanh\,(\gamma u_i u_j + c)$

SVM, originally developed for binary classification are later successfully extended for classification of multiple classes by combining many binary classifiers. The most commonly used

methods based on SVM for multiclass classification are one-against-all, one-against-one, and directed acyclic graph SVM (DAGSVM). The earliest method, one-against-all constructs $k$ binary SVMs for classification of $k$ classes, one dedicated for each class. Hence, requires solving of k quadratic programming problems to find the optimal hyperplanes. Another method one-against-one uses $(k(k-1))/2$ classifiers for $k$ classes, where each SVM is trained with data of two different classes. The prediction of classes for the testing data is based on Max Wins voting [20]. This approach is more complex than the earlier as it involves solving of $(k(k-1))/2$ quadratic programming problems. The training of the third method DAGSVM is same as the one-against-one method while its testing takes a bit less time than the one-against-one method [20].

Despite its computational complexity, the one-against-one method is considered as the most suitable one for multiclass classification problems [20]. Hence, it has been opted for comparison with the proposed model.

### B. Proposed Classification Model

In general, the combined disturbance, which contains two or more single disturbances will exhibit characteristics of all its individual disturbances. For example, sag with harmonics signal will have reduced voltage magnitude and harmonic distortion as well. In such cases, considering the combined disturbances as new classes not only decreases the overall accuracy due to misclassification among the SVMs but also demands more classifiers. Instead, the combined disturbance can be assessed by detection of the individual disturbances. Therefore, a new SVM classification model is proposed utilizing only nine SVMs for classification of single as well as combined disturbances. Each SVM is dedicated to the detection of a single disturbance, flags either 0 or 1 specifying its presence as shown in Fig. 1. To enable the detection of flicker with harmonics, the outputs of both SVM-5 and SVM-6 should be triggered one and rest all to zero. For this to obtain, each SVM is trained with data of classes containing that disturbance with the target as 1 and all other classes with 0. For instance, SVM-3 is trained with all the training data in such a way that the output is one only for C3, C10, C11 and C12 classes. Thus, this model may reduce the misclassification of the combined disturbances and improves the recognition accuracy considerably.

Although, lot of possible combinations of PQ disturbances are available, they can be still detected with the same nine SVMs. Hence, the number of SVMs utilized in the proposed model are independent of the number of combined disturbances and therefore, computationally less expensive when compared to the conventional approaches. The SVMs are implemented with the help of LIBSVM toolbox [21] in MATLAB.

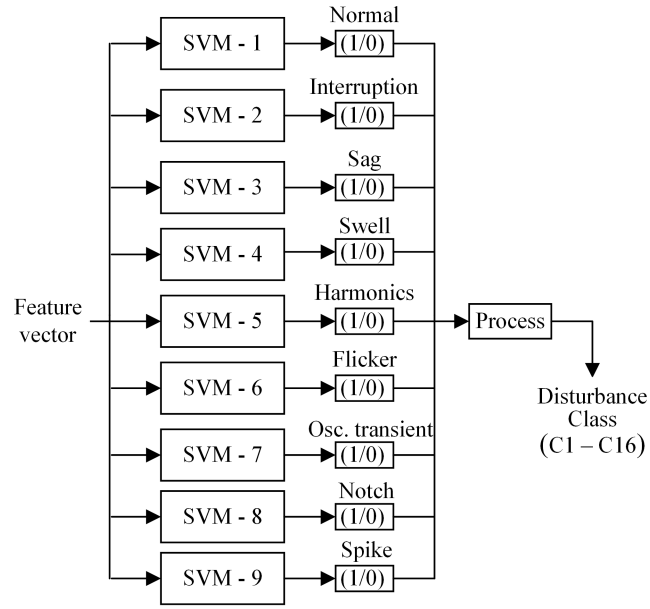


Fig. 1. Proposed classification model based on SVMs.

## V. Results and Discussions

To evaluate the performance of the proposed approach, a broad range of disturbance signals sampled at 10 kHz have been considered for the analysis. A complete set of 6400 signals with 400 signals of each class are generated in MATLAB by varying signal parameters in accordance with the standards and definitions [16]. The signals generated contain fundamental frequency variations of $\pm$ 0.25 Hz and different phase angles. Furthermore, to show the robustness of the proposed approach towards the noise, the generated signals are added with white Gaussian noise of signal-to-noise ratio (SNR) ranging from 25 dB to 50 dB. For each class, 50 % of the data is used for training and the rest 50 % for validation. Finally, the proposed method has also been tested on six real signals acquired in the laboratory using a data acquisition card. The input signal is either voltage or current; it is first normalized and then processed for detection of disturbances. The proposed method is implemented on a PC with an Intel Core i5 3.1 GHz processor and 4 GB RAM.

Table I presents results of the proposed classification model with different kernel functions at 35 dB SNR. The optimum SVM regularization parameters $(\gamma, C)$ shown in the table are obtained by performing a fine search within the intervals. It can be inferred that nonlinear kernels perform better with an average accuracy greater than 93 % for the proposed model. It is also evident from the results that the proposed model shows an improved performance over the conventional one-against-one (OAO) method. Of all the kernel functions employed, the second order polynomial kernel gives better results in the case of OAO method. Finally, concerning classification accuracy, the proposed SVM model with RBF kernel outperforms the other classifier and kernels with the highest classification accuracy of 97.44 %.

The individual classification accuracies of the classes at different SNRs obtained by the proposed model with the RBF

TABLE I
OVERALL ACCURACIES OF THE PROPOSED MODEL WITH DIFFERENT KERNELS

| Kernel | Overall Accuracy (%) | | Training time (s) | | Testing time (s) | |
|---|---|---|---|---|---|---|
| | *PM* | *OAO* | *PM* | *OAO* | *PM* | *OAO* |
| Linear C=40 | 91.36 | 89.1 | 27.1 | 11.394 | 0.013 | 0.021 |
| Polynomial d=2, $\gamma$=0.9, C=8 | 96.71 | 94.59 | 126.8 | 36.27 | 0.011 | 0.025 |
| RBF $\gamma$=0.07, C=90 | 97.44 | 92.38 | 2.03 | 0.219 | 0.018 | 0.057 |
| Sigmoid $\gamma$=0.001, C=95 | 93.25 | 90.4 | 0.614 | 0.353 | 0.019 | 0.119 |

PM: Proposed Model, OAO: one-against-one, and C: cost of constrains violation

TABLE II
CLASSIFICATION ACCURACY RESULTS FOR ALL DISTURBANCES

| Class labels | Classification Accuracy (%) at different SNRs | | |
|---|---|---|---|
| | **25 dB** | **35 dB** | **50 dB** |
| C1 | 96 | 99 | 99 |
| C2 | 97 | 99 | 100 |
| C3 | 95 | 98 | 98 |
| C4 | 96 | 98 | 99 |
| C5 | 98 | 99 | 99 |
| C6 | 97 | 100 | 100 |
| C7 | 94 | 97 | 97 |
| C8 | 95 | 99 | 100 |
| C9 | 96 | 98 | 100 |
| C10 | 94 | 99 | 99 |
| C11 | 90 | 95 | 94 |
| C12 | 93 | 97 | 98 |
| C13 | 92 | 97 | 97 |
| C14 | 91 | 93 | 95 |
| C15 | 92 | 95 | 96 |
| C16 | 93 | 96 | 98 |
| Overall Accuracy | 94.31 | 97.437 | 98.06 |

kernel are listed in Table II. In the case of signals with 50 dB SNR, the overall average recognition accuracy is 98.06 % while a minimum accuracy of 94 % is noticed for a combined disturbance containing sag and flicker. The sag with flicker signals may be misclassified as only voltage sag due to the insignificant fluctuations in voltage, and same is the case for swell with transient class. Otherwise, the proposed model works well for all the single disturbances. In a noise case of 25 dB SNR, the overall classification accuracy drops to 94.31 %, which is still considerable. The reduction in overall accuracy is mainly due to the combined disturbances.

To further exploit the performance of the proposed model for more disturbances, experiments are performed with additional classes of flicker + transient, harmonics + transient, sag + harmonics + flicker, swell + harmonics + flicker. It was observed that the proposed classifier shows reduced performance than the 16 classes with the inclusion of four new classes. However, the results of the proposed model are still better than that of the one-against-one method with a difference of approximately 9 %.

In the second performance evaluation, the feature extraction, training and testing time are investigated. As the features utilized for both the classifiers are same, the feature extraction time also remains same. The feature extraction time including signal decomposition using GEWT and extraction of all the features is found to be around 27.3 ms on an average. It is obvious that the time required for training a classifier is more than the testing time, and the same is evident from the Table I. Though one-against-one method trains 120 SVMs for 16 classes, as each SVM is trained with only data of two classes, the total training time is relatively less than the proposed model. This is because SVM in the proposed model is trained with complete data thus takes more time for training. The situation is too worst with the polynomial kernel as it takes 126.8 s to train the SVMs. However, the key observation is that the proposed model is fast in testing and takes not more than 20 ms. As the training is performed only once and that too offline, the feature extraction and testing time play a major role in deciding the ability of the approach for real-time analysis. The overall classification time of the proposed model with RBF kernel including signal decomposition, feature extraction, and testing is obtained as approximately 50 ms, which proves its competence for online application. Finally, the proposed classifier has been tested on six real disturbance signals of harmonics, harmonics with interharmonics, a transient with harmonics acquired from the laboratory setups. It is observed that the proposed approach can recognize the disturbances correctly, proving its practicality.

## VI. CONCLUSION

The paper presents an approach with generalized empirical wavelet transform (GEWT) and a new classification model based on SVM. The GEWT is completely adaptive from the frequency estimation stage to filter design and doesnt require any prior information. This adaptiveness and the computational efficiency of FFT make the GEWT advantageous for assessment of non-stationary signals. The use of only nine SVMs, each dedicated for a single disturbance helps in the better recognition of the combined disturbances with reduced misclassification. Also, the testing time of the proposed classifier is less than the one-against-one method. Finally, the experimentations carried out on the simulated as well as a few real signals clearly reveal the speed, accuracy and practical applicability of the proposed approach.

## REFERENCES


[1] R. C. Dugan, M. F. McGranaghan, S. Santoso, and H. W. Beaty, *Electrical Power Systems Quality*. New York, NY: McGraw-Hill, 2012.

[2] J. Milanovic, J. Meyer, R. Ball, and et al, "International Industry Practice on Power-Quality Monitoring," *IEEE Trans. Power Del.*, vol. 29, no. 2, pp. 934–941, 2014.

[3] M. Kezunovic and Y. Liao, "A Novel Software Implementation Concept for Power Quality Study," *IEEE Trans. Power Del.*, vol. 17, no. 2, pp. 544–549, 2002.

[4] L. C. Andrade, M. Oleskovicz, and R. A. Fernandes, "Adaptive threshold based on wavelet transform applied to the segmentation of single and combined power quality disturbances," *Applied Soft Computing*, vol. 38, pp. 967–977, 2016.

[5] G. S. Hu, F. F. Zhu, and Z. Ren, "Power quality disturbance identification using wavelet packet energy entropy and weighted support vector machines," *Expert Syst. Appl.*, vol. 35, no. 1, pp. 143–149, 2008.

[6] S. Shukla, S. Mishra, and B. Singh, "Empirical-Mode Decomposition With Hilbert Transform for Power-Quality Assessment," *IEEE Trans. Power Del.*, vol. 24, no. 4, pp. 2159–2165, 2009.

[7] S. He, K. Li, and M. Zhang, "A real-time power quality disturbances classification using hybrid method based on s-transform and dynamics," *IEEE Trans. Instrum. Meas.*, vol. 62, no. 9, pp. 2465–2475, 2013.

[8] S. R. Samantaray, "Decision tree-initialised fuzzy rule-based approach for power quality events classification," *IET Gener., Transm., Distr.,*, vol. 4, no. 4, pp. 530–537, 2010.

[9] M. Zhang, K. Li, and Y. Hu, "A real-time classification method of power quality disturbances," *Elect. Power Syst. Res.*, vol. 81, no. 2, pp. 660–666, 2011.

[10] M. S. Manikandan, S. Samantaray, and I. Kamwa, "Detection and classification of power quality disturbances using sparse signal decomposition on hybrid dictionaries," *IEEE Trans. Instrum. Meas.*, vol. 64, no. 1, pp. 27–38, 2015.

[11] B. Biswal, P. K. Dash, and B. K. Panigrahi, "Power quality disturbance classification using fuzzy C-means algorithm and adaptive particle swarm optimization," *IEEE Trans. Ind. Electron.*, vol. 56, no. 1, pp. 212–220, 2009.

[12] M. Valtierra Rodriguez, R. de Jesus Romero Troncoso, and et al, "Detection and Classification of Single and Combined Power Quality Disturbances using Neural Networks," *IEEE Trans. Ind. Electron.*, vol. 61, no. 5, pp. 2473–2482, 2014.

[13] Z. Liu, Y. Cui, and W. Li, "A Classification Method for Complex Power Quality Disturbances Using EEMD and Rank Wavelet SVM," *IEEE Trans. Smart Grid*, vol. 6, no. 4, pp. 1678–1685, 2015.

[14] W. M. Lin, C. H. Wu, C. H. Lin, and F. S. Cheng, "Detection and classification of multiple power-quality disturbances with wavelet multiclass svm," *IEEE Trans. Power Del.*, vol. 23, no. 4, pp. 2575–2582, 2008.

[15] D. De Yong, S. Bhowmik, and F. Magnago, "An effective power quality classifier using wavelet transform and support vector machines," *Expert Syst. Appl.*, vol. 42, no. 15, pp. 6075–6081, 2015.

[16] C. Y. Lee and Y. X. Shen, "Optimal Feature Selection for Power-Quality Disturbances Classification," *IEEE Trans. Power Del.*, vol. 26, no. 4, pp. 2342–2351, 2011.

[17] J. Gilles, "Empirical Wavelet Transform," *IEEE Trans. Sig. Process.*, vol. 61, no. 16, pp. 3999–4010, 2013.

[18] K. Thirumala, A. Umarikar, and T. Jain, "Estimation of Single-Phase and Three-Phase Power-Quality Indices Using Empirical Wavelet Transform," *IEEE Trans. Power Del.*, vol. 30, no. 1, pp. 445–454, 2015.

[19] C. Cortes and V. Vapnik, "Support-vector networks," *Machine learning*, vol. 20, no. 3, pp. 273–297, 1995.

[20] C. W. Hsu and C. J. Lin, "A comparison of methods for multiclass support vector machines," *Neural Networks, IEEE Transactions on*, vol. 13, no. 2, pp. 415–425, 2002.

[21] C. C. Chang and C. J. Lin, "LIBSVM: A library for support vector machines," *ACM Trans. Intell. Syst. Technol.,*, vol. 2, no. 3, pp. 1–27, 2011.