Seismic Performance of Steel Bridge Piers Containing Composite Connections

S.J. Fulmer, M.J. Kowalsky & J.M. Nau
Department of Civil, Construction and Envinronmental Engineering, North Carolina State University, Raleigh, NC, USA

SUMMARY:
This paper describes original research conducted to evaluate the seismic performance of composite connections designed to capacity protect critical welded interface regions between the pipe pile and cap beam elements of steel bridge piers. Past research has shown that directly welding circular hollow steel piles to a steel cap beam, regardless of weld configuration, does not mitigate the undesirable failure mode of brittle cracking in the welded region. Hence, specific attention should be given to capacity protecting critical welds. One such option, utilizes an annular grouted region with shear stud connectors that facilitate force transfer from the pile to a larger stub pile component that is welded to the cap beam in a capacity protected manner. Through full scale quasi-static testing and non-linear FEA, the connection has been shown to adequately develop flexural hinging in the form of pile wall local buckling while avoiding undesirable failure modes.

Keywords: Steel, Bridge, Connection, Pile, Pipe

1. INTRODUCTION

1.1. Research Scope

The primary focus of the research discussed in this paper was to improve the seismic performance of steel bridge piers by developing a more ductile connection configuration than had been employed in past construction practice. The steel bridge piers under consideration consist of driven hollow circular steel pipe piles and double HP section cap beams as shown in Fig. 1.1. These multi-column piers are expected to behave as moment resisting frames intended to restrain lateral loading generated by shaking of the super structure during a seismic event. As is typical in bridge design, flexural hinges are expected to develop in the column elements which serve as fuse links to limit the forces which may be developed in the rest of the system. Consequently, the connection between the driven steel pipe piles and steel cap beam soffit must not only be capable of developing the full plastic moment capacity of the pile, but must also be able to accommodate large inelastic rotations to ensure that adequate system displacement ductility capacity can be achieved.

1.2. Past Research

Past experimental and analytical research, discussed in detail in (Fulmer, et al. 2010; Cookson 2008), has shown that directly welding steel pipe piles to the steel cap beam without explicit consideration for protecting the welded region, results in an undesirable brittle cracking ultimate limit state. Multiple weld configurations were considered in the past study including a fillet weld, a complete joint penetration (CJP) weld, a CJP weld with a reinforcing fillet weld outside of the pile, and a CJP weld with reinforcing fillet welds inside and outside of the pile. Regardless of the weld configuration, the same undesirable brittle cracking failure mode was experienced primarily at the toe of weld region, as shown in Fig. 1.1, as well as through the weld itself in the case of the fillet configuration. Although minor levels of pile wall local buckling were experienced in the cases that included a CJP weld, in no case did this more desirable mode of failure control the upper-bound limit state of the system.

Figure 1.1. Left: Driven Pile Steel Pier (Compliments of AKDOT); Right: Cracking at Toe of Welded Connection

2. DEVELOPMENT OF STEEL BRIDGE PIER COMPOSITE CONNECTIONS

2.1. Design Model Concept – Grouted Shear Stud Connection

In order to effectively protect the critical welded regions of the steel pipe pile to cap beam connection, a capacity design philosophy was applied to develop a new configuration which would satisfy two key criteria. First, the location of damage in the pile element would be moved below the welded region and secondly, the welded region would be strengthened to remain in the elastic range of response taking into account the increased bending moment demand generated by forcing flexural hinging lower in the pile element. It was postulated by the researchers that following these two key criteria would allow the more desirable failure mode of flexural hinging, in the form of pile wall local buckling, to control the ultimate limit state of the system given that the welded connections had been shown to avoid cracking in the elastic range of loading in past research.

One connection configuration option that was developed and anticipated to meet these two key criteria was a grouted pocket style connection which uses larger stub pile components that are directly welded to the cap beam as shown in Fig. 2.1. During construction, the cap beam is placed over the driven steel piles which fall inside the stub components forming the pocketed connection. The annular region between the I.D. of the larger stub pipe and the O.D. of the driven pile contains shear stud connectors which, after grouting the annular region, facilitate force transfer from the pile element to the larger stub pile section that is welded to the cap beam and is capacity protected due to its larger diameter.

Figure 2.1. Grouted Shear Stud Connection Components

The shear stud connectors contained in the annular region between the two pipe sections are welded in a symmetrical pattern on the outside of the driven steel pile with a matching pattern of shear studs, radially and vertically offset, placed inside the larger stub pipe pile. The annular space is filled with

flowable high strength grout to complete the connection and allow for force transfer between the two sets of shear stud connectors in a strut and tie mechanism. The configuration lets the full over-strength plastic bending moment capacity of the pile section to be developed below the connection region with no required welding of the driven pile to the cap beam.

The design model developed to determine the actual details of the connection was based on the simple assumption that the total nominal strength of the shear stud connectors, on the pile side, should be capable of developing yielding of the gross cross section of the pile element. This concept resulted in Eqn. 2.1 where the required number of pile side shear connectors (N_{req}) is a function of the anticipated yielding force of the gross cross section of the pile (T_y) and the nominal strength of a single shear connector (Q_n) which are determined by Eqn. 2.2 and Eqn. 2.3 respectively. To determine the anticipated yielding force, expected material yield stress ($f_{y,exp}$) considering appropriate material over-strength factors should be utilized along with the gross area of the pile ($A_{g,pile}$). The shear stud capacity model presented in Eqn. 2.3 was adopted from the provisions of "AASHTO LRFD Bridge Design Specifications" (AASHTO, 2007) Section 6.10.10.4.3 as well as the *ANSI/AISC 360-05* (AISC, 2005) Section I3 both of which provide the same model. As shown, the model is a function of concrete compressive strength (f'_c), the cross sectional area of the shear stud connector (A_{sc}), the tensile stress capacity of the shear stud connector (F_u) and an empirical modulus (E_c) given in Eqn. 2.4. Although the model is intended for use (in both code specifications) for composite construction between beams and a concrete slab or bridge deck, it was judged to be conservative for use in this design given the highly confined nature of the annular grout pocket.

$$N_{req} = T_y / Q_n \tag{2.1}$$

$$T_y = f_{y,ex} A_{g,pile} \tag{2.2}$$

$$Q_n = 0.5 A_{sc} \left(f_c' E_c \right)^{0.5} \leq A_{sc} F_u \quad \text{(ksi units)} \tag{2.3}$$

$$E_c = 1746 \left(f_c' \right)^{0.5} \quad \text{(ksi units)} \tag{2.4}$$

Detailing requirements of the design model with respect to the placement of the stud connectors was based on engineering judgment as well as an effort to generate an omnidirectional moment resisting connection. These requirements resulted in an even placement of shear studs at 30 degrees on centers around the circular pile with a vertical spacing of 5" (12.7 cm) to facilitate construction. As has been noted, a matching pattern of shear studs is placed on the inside of the stub pile component offset vertically by 2-1/2" (6.4 cm) and radially by 15 degrees. The final design consideration in the model consisted of checking the stub pile component to ensure that the section remains elastic as the full over-strength moment capacity of the pile section develops at the base of the connection assuming composite action between the two pipe sections does not occur at the extremities of the connection.

2.2. Experimental and Analytical Research Details

In order to evaluate the ability of the grouted shear stud connection configuration to achieve the intended research goals, both experimental and analytical evaluations were conducted. Full scale experimental tests were conducted at North Carolina State University's Constructed Facilities Laboratory (CFL) on specimens consisting of ASTM A500 Gr. B HSS16x0.500 pipe piles with a double ASTM A572 Gr. 50 HP14x117 cap beam. As shown in Fig. 2.2, pinned base supports were used as boundary conditions to mimic the point of contraflexure that would develop in the double bending moment demand pattern of an actual driven pile system. No additional axial load was applied. A 440 kip (2000 kN) actuator was used with a reaction wall to generate lateral loading at the cap beam level following a three cycle set load history. This load history is defined by single reverse cyclic force-controlled steps that increase by increments of ¼ first yield force until a full first yield force cycle is conducted, followed by three cycle sets of displacement ductility increments. In this protocol a displacement ductility of 1 is defined as the experimental first yield displacement extrapolated by the ratio of nominal system strength to the first yield system strength. Increasing

levels of displacement ductility were imposed in the order of 1, 1.5, 2, 3, 4, 6, etc. until failure. This style of balanced load history effectively evaluates the full reverse cyclic capabilities system.

In addition to the experimental evaluations which have been described, analytical finite element modeling (FEM) was conducted to better understand the connection behavior. The program Abaqus was used to develop a 3 dimensional FEM using a combination of shell and solid elements to model the entire experimental specimen. Material non-linearity was considered in the modeling process utilizing a non-linear isotropic/kinematic combined hardening model, appropriate for cyclic loading of metals, which was calibrated with laboratory tensile test data from pile material. Geometric non-linearity was also considered in order to not only properly model the global behavior at large deformations but also to appropriately capture the limit state of pile wall local buckling associated with flexural hinging of the pile components.

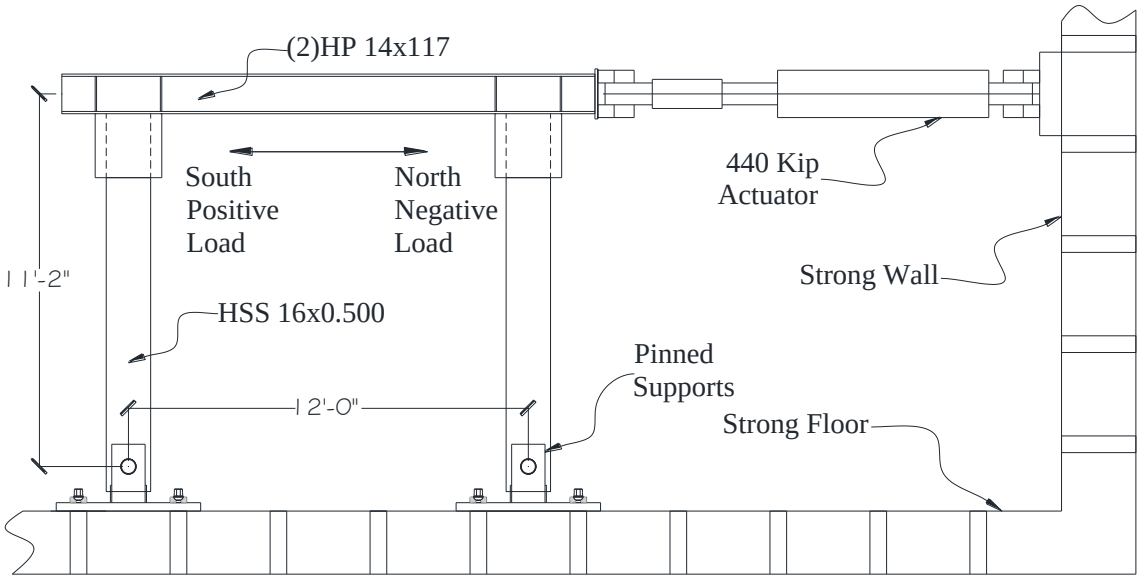

Figure 2.2. Laboratory Set-Up Configuration

Applying the design model concept described in the prior section of this paper to the experimental specimen with material over-strength factors from (AISC, 2010), resulted in the connection design detailed in Fig. 2.3. As is shown, (96) 3/4" shear studs were found to be necessary for each connection and were evenly distributed around the pile section. A 24" O.D. ASTM A500 Gr. B. stub pile component was chosen to provide a reasonable annular gap and to ensure the critical CJP weld between the stub pile and cap beam remained elastic. A shear stud length of 2-1/2" was chosen to ensure that regardless of the tolerance in the system, a minimal overlap of 1/2" between the opposing sets of shear studs would exist. All welding associated with the construction of the specimens was done by steel fabricators in a shop environment and all welds were subject to full visual and ultrasonic inspection. The test piers were constructed at NCSU's CFL where grout was placed in the annular region to complete the connection. This was done using BASF Masterflow 928 high strength flowable grout which was pumped from the bottom of the connection to ensure minimal air voids would exist in the grout block.

3. SEISMIC PERFORMANCE EVALUATION

3.1. Evaluation of a Nominally Ideal Connection Configuration

The first experimental test conducted focused on evaluating a nominally ideal connection with minimal tolerance misalignment, as shown in Fig. 3.1, in an effort to evaluate the best possible performance of the proposed connection design methodology. The results of the experimental test

showed the connection to be capable of successfully developing a flexural hinging mode of failure in the form of pile wall local buckling at the intended region immediately below the connection as shown in Fig. 3.2. Although cracking of the grout leading to eventual dislodging below the initial layer of shear studs did occur at levels of response as low as the first yield loading cycles, this damage was not associated with any strength loss or hysteretic stiffness degradation and would at most constitute a damage control limit state depending on the design requirements of a given project.

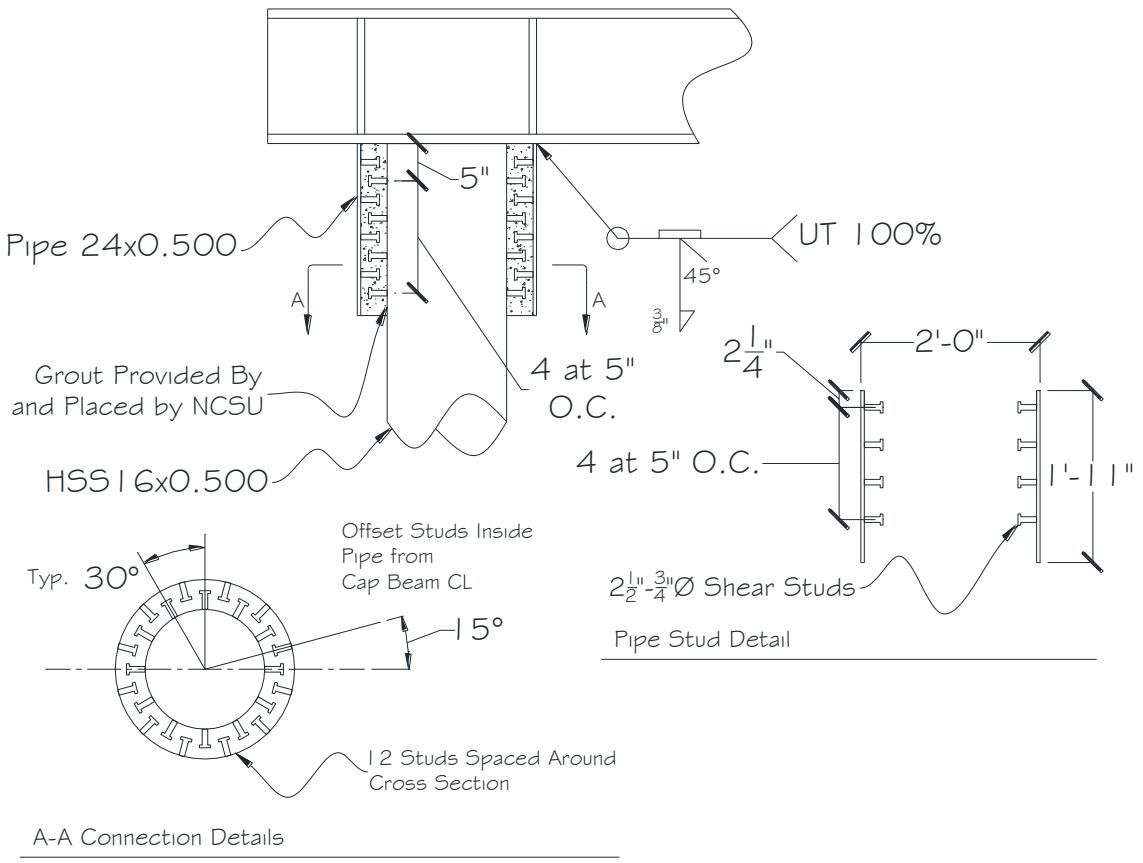

Figure 2.3. Experimental Specimen Connection Details – Grouted Shear Stud Connection

Ultimately, the limit state of pile wall local buckling was shown to control at a reliable displacement ductility level of 3 to 4 depending on the assumed allowable level of strength degradation as shown in Fig. 3.3 which provides the hysteretic force-displacement response and back-bone curves from the experimental test. This range of reliable response was associated with 8.44” (21.4 cm) to 11.26” (28.6 cm) of cap beam displacement or 8.1% to 10.8% drift. Although associated with large levels of damage and loss of strength, the specimen was able to remain in-tact at a displacement ductility of 6 associated with 16.88” (42.9 cm) of displacement. It is important to note that regardless of the reliable displacement capacity of the system, the connection design was able to achieve to the two key goals of the design methodology. First, the critical welded region of the stub pipe to cap beam connection was shown to remain in the elastic range of loading as is shown in Fig. 3.4 which provides an example strain elevation plot from data collected during the test along the north extreme fiber of the south pile. As is shown, the entire capacity protected region of the connection remained in the elastic range of loading as flexural hinging developed in the pile section as was the design intention. This was shown to be the case on each extreme fiber of each pile. Secondly, damage in the form of pile wall local buckling associated with flexural hinging was shown to be successfully relocated to the intended hinging region immediately below the connection region.

In an effort to verify the results of the experimental test and more importantly to better understand the behavior of the connection region, FEM of the entire test pier was conducted with the details discussed

previously in this paper. The results of the model showed local buckling to occur at the base of the connection producing a similar deformed shape and hysteretic response to that of the experimental specimen as shown in Fig. 3.5. Given the apparent accuracy of the model when comparing general behavior to that of the test, the results were used to investigate behavior which was not easily captured by laboratory instruments. In particular, Von Misses stresses were evaluated in the grout block to better understand the connection behavior. Given the positive results of the experimental test with respect to the connection design methodology, the resulting question was whether or not the design could be optimized by reducing the required number of shear stud connectors.

Figure 3.1. Ideal Grouted Shear Stud Connection Test Pier

Figure 3.2. Buckling of Pile Wall at Base of Connection with Dislodging of Cover Grout

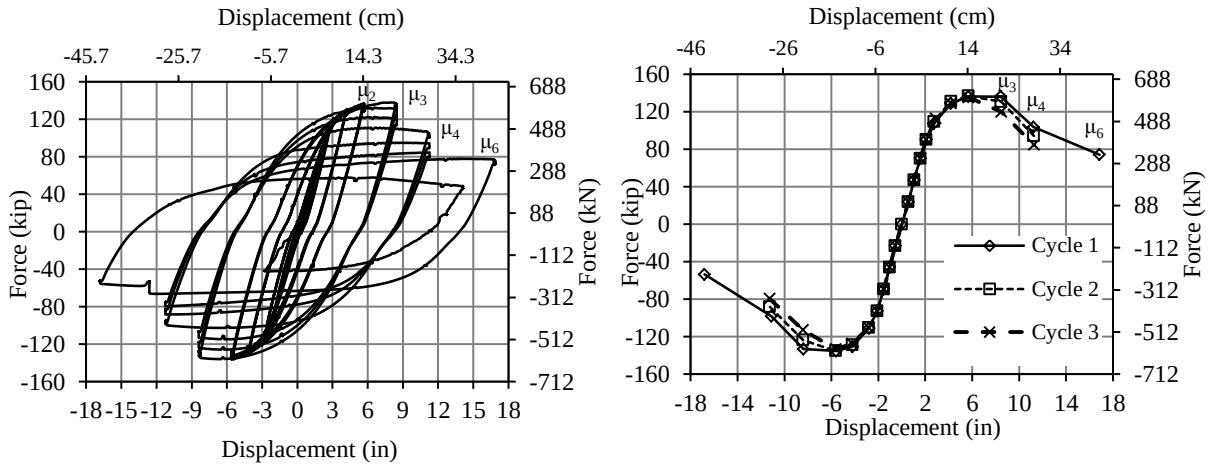

Figure 3.3. Left: Ideal Configuration Hysteretic Response; Right: Cycle 1,2,&3 Back-Bone Curves

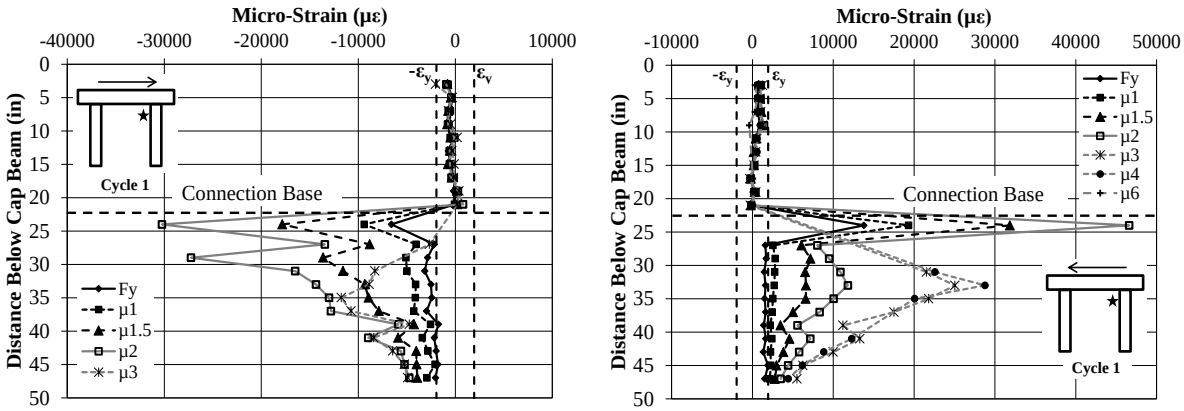

Figure 3.4. Example Strain Elevation – Ideal Configuration South Column – North Extreme Fiber

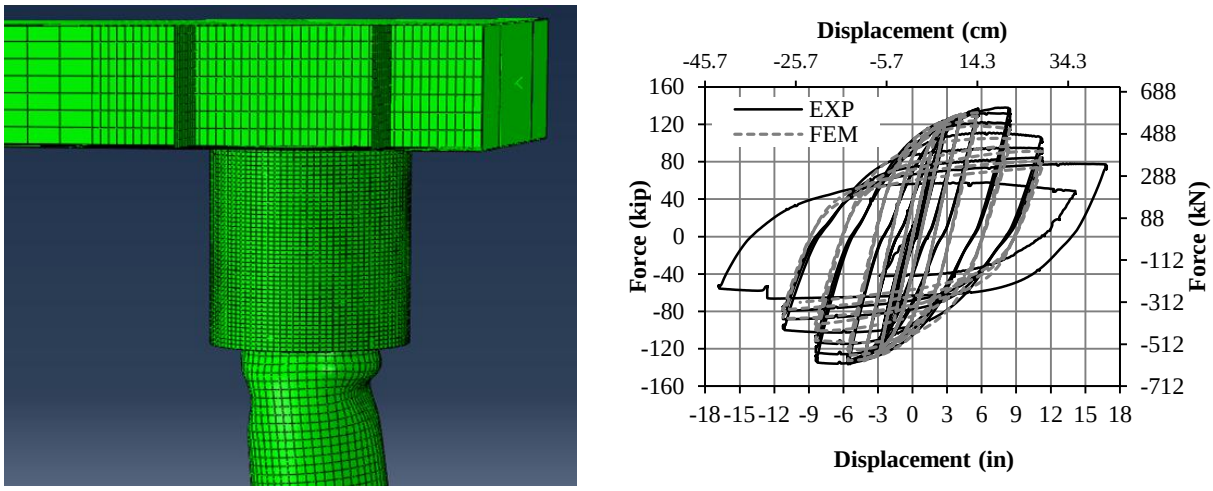

Figure 3.5. Left: FEM Buckling at Base of Connection; Right: FEM vs. Experimental Hysteretic Response

In an effort to answer this question, Von Mises stresses within the grout block were reviewed at a displacement ductility level of 2 as this level is expected to correspond to maximum system forces. Given the modelling assumption of an elastic grout material, which was necessary for computational efficiency, the actual stress value magnitudes are considered to be less important than the stress pattern of Fig. 3.6 which clearly shows the location and efficiency of the shear stud connectors from both the pile side and pipe stub side of the connection. As would be expected, the largest levels of stress are experienced at the stud connectors near the base of the connection on the pile side and near the top of the connection on the pipe stub side of the grout block. However, the farthest levels of shear connectors on either side of the connection are shown to still experience a noticeable level of stress when reviewing the pattern in Fig. 3.6. Therefore, it was not immediately apparent that any level of stud connectors was being grossly under-utilized and should be removed except those near the neutral axis. However, this would be expected and does not warrant removal given the intention to ensure that an omnidirectional moment resisting connection is maintained as previously discussed.

3.2.Evaluation of a Fully Offset Construction Tolerance Configuration

The second experimental test of the grouted shear stud connection was aimed at evaluating the capabilities of the connection configuration to replicate the successful results of the ideally constructed specimen when a maximum possible construction tolerance offset was present. In order to perform the experiment, during construction the cap beam was shifted south longitudinally to the test frame such that maximum gapping and minimum shear stud overlap existed at the south extreme fiber within the

connection of each pile as shown in Fig. 3.7. For the test specimen this offset corresponded to a construction tolerance of +/- 1” (2.54 cm) and a minimum shear stud overlap of 1/2" (12.6 mm).

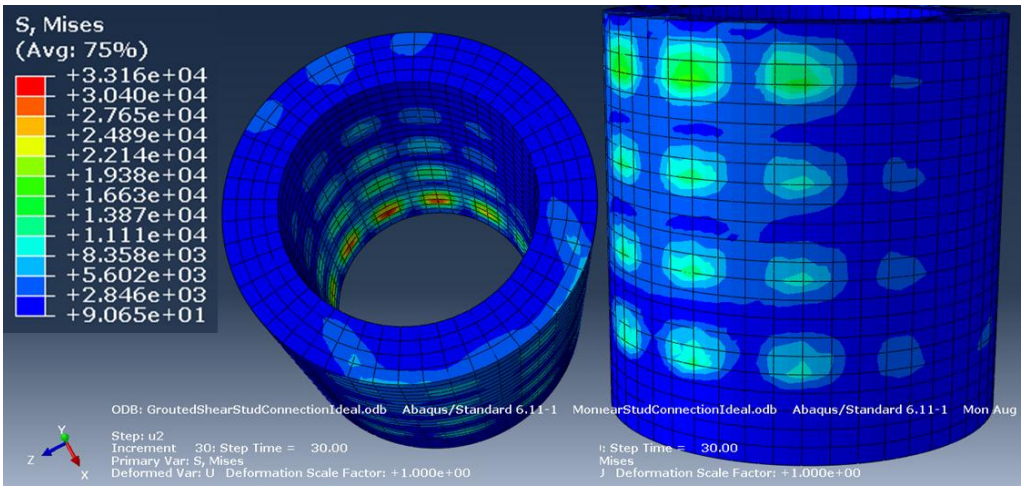

Figure 3.6. FEM Results – Von Mises Stresses in the Grout Material

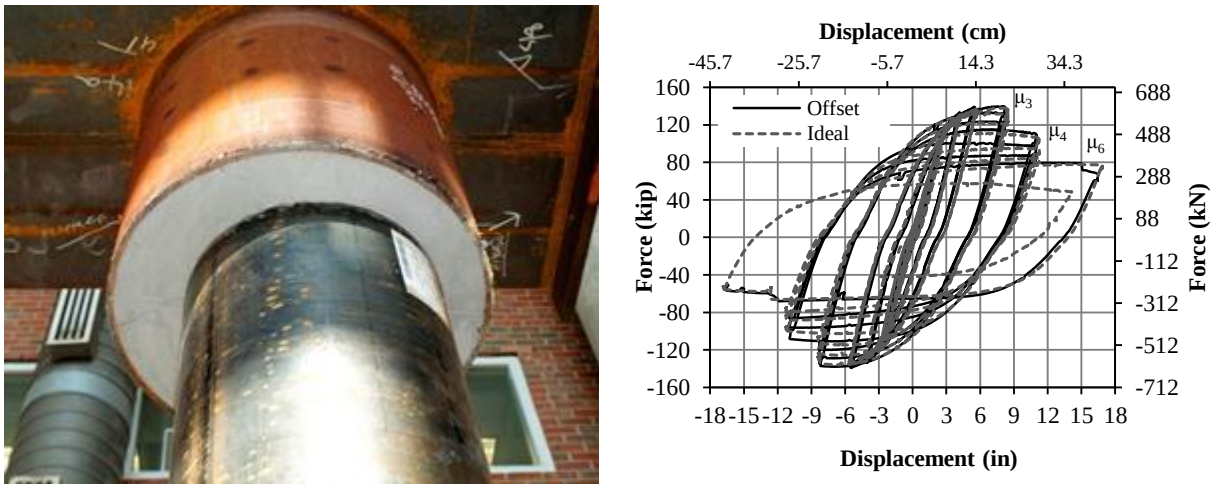

Figure 3.7. Left: Offset Grouted Shear Stud Specimen; Right: Offset vs. Ideal Hysteretic Response

The experimental test showed the performance of the pier as well as that of the connection to be essentially identical to that of the ideal configuration resulting in matching hysteretic response shown in Fig. 3.7. Damage was again successfully relocated to the intended hinging region immediately below the connection and strains were again shown to remain the elastic range at the interface weld between the stub pile element and the cap beam soffit. Dislodging of the cover grout below the first layer of shear stud connectors was experienced but again produced no effects on the strength, stiffness, or ultimate limit state of the system. The successful results of this experimental test can be considered beneficial in a design scenario since adequate connection performance was achieved at a maximum possible construction tolerance offset of +/- 1” (2.54 cm). Further, since the annular gap sizing and shear stud length are functions of the design process the designer inherently controls the maximum possible construction tolerance within in the joint region as opposed to the case of basic welded connections which would rely solely upon rigorous inspection for the engineer to verify as built construction tolerance.

3.3. Evaluation of Altered Buckling Restrained Configuration

The third experimental test conducted focused on the evaluation of a modified buckling restrained (B.R.) configuration of the grouted shear stud connection intended to mitigate post buckling strength

degradation by controlling the propagation of pile wall local buckling. It was shown by (Nishikawa, K., et. al. 1998) that a possible retrofitting technique where an outer steel ring is placed around an existing circular single column steel bridge pier may provide a marginal increase to the ductility capacity of the system without increasing the strength. The scheme was intended to control the growth of local buckling by placing the retrofitting steel ring around the intended damage region of the column and leaving a small gap such that the initial stiffness and ultimate strength of system remained unaltered. The study found the method to be successful. However sizing of the gap was found to be a critical component of the process to ensure that the local buckling was adequately restrained prior to the accumulation of strength loss.

Applying this concept to the grouted shear stud connection design generated a configuration that was 10” (25.4 cm) longer than the standard configuration. Within this extra length, a 1/2" (12.6 mm) annular block-out was placed between the HSS16x0.500 pile wall and the grout block to provide a restraining ring similar to the steel ring used by (Nishikawa, K., et. al. 1998). It was recognized that the smallest possible annular gap should be provided while avoiding contact of the pile wall to the grout block due to typical flexural displacements over the 10” (25.4 cm) block-out length to avoid altering the behavior of the system and the connection prior to the development of local buckling. FEM was utilized to determine an optimal solution which was found to be a gap size of 1/2" (12.6 mm) which provided a reasonable post buckling stiffening effect, as shown in Fig. 3.8, while avoiding premature contact of the pile.

The results of experimental testing and data analysis indicated that the buckling restrained configuration was effective at properly locating damage in the form of pile wall local buckling within the intended block-out location. As was the case with the standard configuration, undesirable failure modes such as weld cracking were avoided. Restraint provided by the grout block did produce a post-buckling stiffening effect in the hysteretic response, as shown in Fig. 3.9, resulting in the restoration of some system strength as was the design intention. However, the magnitude of strength that was restored in the system was insufficient to produce a significant improvement in the system behavior particularly at the higher levels of response. This lack of impact is particularly evident in the comparison of normalized force-displacement envelopes between the standard configuration and buckling restrained configuration as shown for cycle 1 in Fig. 3.9 which indicates considerable similarity in the post buckling performance of both configurations as did cycles 2 and 3 not shown here. Considering this result along with the additional labor required to form the block-out region, the standard connection is recommended over the buckling restrained configuration. Based on this conclusion, it may be necessary to consider lower D/t values should an increased deformation capacity be required beyond that which is provided by the standard grouted shear stud detail.

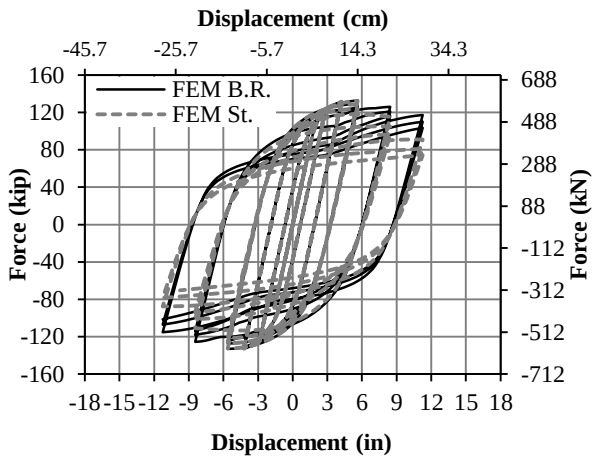

Figure 3.8. Left: Standard vs. B.R. FEM Hysteretic Response Right: Grouted Shear Stud Connection with Buckling Restraint Annular Block-Out

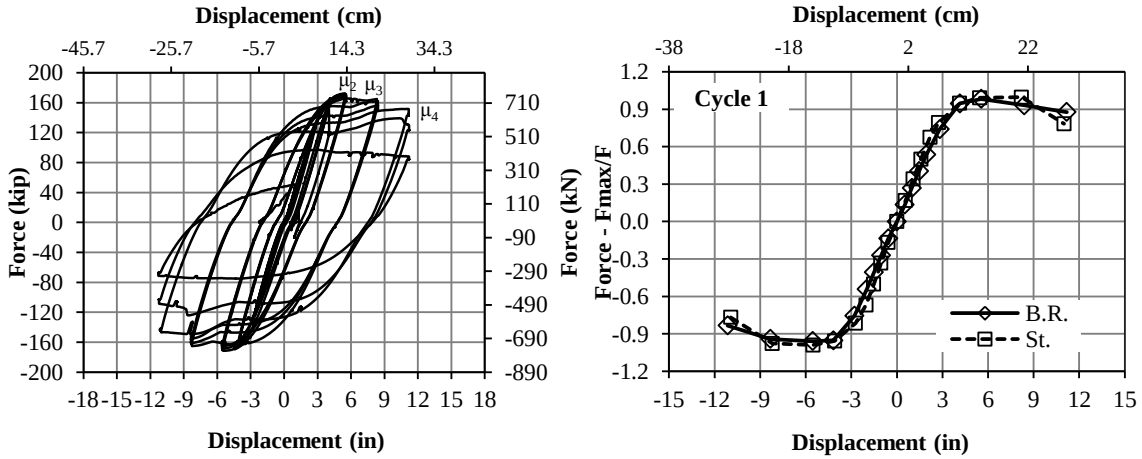

Figure 3.9. Left: B.R. Configuration Hysteretic Response Right: BR. vs. St. Ideal Normalized Cycle 1Back-Bone Curves

4. CONCLUSIONS AND RECOMMENDATIONS

As has been discussed, the grouted shear stud composite connection has been shown to perform in a more ductile and stable manner than standard welded connections in circular driven pile steel bridge pier systems by avoiding brittle cracking failure modes prior to the more desirable failure mode of flexural hinging in the form of pile wall local buckling. The improved performance was achieved by ensuring that the two keys goals of relocating damage away from the cap beam soffit and ensuring critical welded regions remain in the elastic range of loading were fulfilled by the design methodology. Further, the design procedure presented in this paper was shown to produce a connection configuration robust enough to achieve the intended performance goals not only when constructed with ideal alignment, but also with maximum possible construction tolerance offsets. Although an attempt was made to develop a modified detail which would mitigate post buckling strength loss by controlling the propagation of pile wall local buckling, the magnitude of strength restoration associated with the stiffening effect was too low to produce a major change as was apparent when comparing the response of the buckling restrained to the standard configuration.

AKCNOWLEDGEMENT

The authors wish to acknowledge Alaska DOT&PF and Alaska University Transportation Center (AUTC) who supported this research through a series of grants. Special acknowledgement goes to Elmer Marx of Alaska DOT&PF who was closely involved in this research as the primary technical contact. The assistance of the entire staff of the Constructed Facilities Laboratory is appreciated.

REFERENCES

American Association of State Highway and Transportation Officials (AASHTO). (2007). AASHTO LRFD Bridge Design Specifications. 4th Edition. Washington, D.C.

American Institute of Steel Construction (AISC). (2010). ANSI/AISC341-10 Seismic Provisions for Structural Steel Buildings. Chicago, IL.

American Institute of Steel Construction (AISC). (2005). ANSI/AISC360-05 Specifications for Structural Steel Buildings. Chicago, IL.

Cookson, K.A. (2009). Seismic performance of steel bridge bent welded connections. M.S. Thesis. Department of Civil, Environmental, and Construction Engineering North Carolina State University

Fulmer, S.J., Kowalsky, M.J., Nau, J.M., Hassan, T. (2010). Ductility of welded steel pile to steel cap beam connections. *ASCE/SEI Structures Congress*. **Vol I:** 216-227.

Nishikawa, K., Yamamoto, S., Natori, T., Terao, K., Yaunami, H., Terada, M. (1998). Retrofitting for seismic upgrading of steel bridge columns. *Engineering Structures* **20:4-6**,540-551.