AN APPROACH TO EVALUATION OF THE STABILITY OF RADIO-ACTIVE WASTE STORAGE CAVERNS IN GEOLOGICAL TIME PERIOD

Ikuo Katayama (I)
Tadashi Annaka (II)
Yoshiji Fujii (III)
Yutaka Kishida (IV)
Presenting Author: Ikuo Katayama

SUMMARY

This paper presents a simple and conceptual approach to evaluate the stability of radioactive waste storage caverns in seismically active region for crustal movements in geologic time span. Unit coseismic deformations of rock surrounding the cavern assembly were calculated for two typical great earthquakes and applied to the nodal points along the finite element model boundary of a representative cross section of the cavern in the center of the assembly, by using FEM model reduction technique. The results showed that the induced tensile and shear stresses reached a level to which some adequate reinforcement might be needed to avoid cracking of lining concrete for such extra loads besides the ordinary loads.

INTRODUCTION

The possible sites for large scale radioactive waste storage facilities are expected in underground. Considering the difficulty to move a large amount of radioactive waste once stored in a particular site to other places, it seems that such facilities should remain sound enough for a far longer time span compared with other ordinary ones.

Should they remain with the waste for over hundred or thousand years since construction, they will possibly be affected by some geologic hazard due to an abrupt strain change by earthquake around the cavern assembly if they were located in the region where large or great earthquakes have occurred since historical times.

In the following section, authors present a very simple but practical approach for evaluating the stability of such underground facilities during geologic time span against natural phenomenon like repetitive crustal movements. And a hypothetically designed cavern assembly is chosen for illustrating the analysis procedure and the needs for engineering review of this type of disturbance in the feasibility study of siting these facilities.

(I) Consulting earthquake engineer, Manager, Tokyo Electric Power Services Co., Ltd. (TEPSCO), Tokyo, Japan

(II) Seismologist, Executive chief engineer, TEPSCO, Tokyo, Japan

(III) Civil engineer, Taisei Corporation, Tokyo, Japan

(IV) Civil engineer, Penta Ocean Construction Co., Tokyo, Japan

EXPRESSION OF CRUSTAL MOVEMENTS AND INTRODUCTION INTO ANALYSIS

The present topographic features of Japan Island shows a good coincidence with the upheaval and subsidence in the last 2 million years and has often been interpreted mainly as the result of crustal movements which have been continuing during the Quaternary period. The fundamental characteristics of the Quaternary crustal movements is well explained by the 'accumulation law' by Kasahara et al (Ref. 1); as shown by various evidence, the crustal movements during the very long time period of the last 2 million years in the Quaternary period are considered as the result of accumulation of repeated 'Unit deformation', and the occurrence of earthquake becomes the basic element among the cause of the unit deformation.

Therefore, in case that it is necessary to review the stability of the caverns against crustal movements in the very long time span which is followed by large earthquakes that have return period of some hundred to few thousand years, it may become possibly a first approach to estimate the behavior of the caverns affected by this unit deformation accompanied by large or great earthquakes.

Following the above recognition, first we calculate the unit deformations caused by two typical great earthquakes Japan has experienced and the fault models of which have been known. Next, the distribution of deformation surrounding the cavern assembly being located fairly close to the fault plane is used as the boundary conditions of the three dimensional finite element model of the cavern assembly and the surrounding rock, for each type of the earthquake.

Calculation of the unit deformation

Recent development in the area of dislocation theorem application has made it possible to calculate the coseismic crustal deformation of fairly realistic layered elastic half-space by Sato and Matsu'ura (Ref. 2) and Matsu'ura and Sato (Ref. 3)

It is reported that the premise of a homogeneous half-space and that of a realistic layered half-space did not cause a significant discrepancy in the estimate of crustal deformation change before and after earthquakes and also the assumption of rectangular fault plane model with uniform dislocation throughout the plane could be an efficient approximation of more realistically treated models.

Therefore we used rectangular fault plane model in an elastic homogeneous half-space for the calculation of coseismic displacement and strain changes by following theoretical formula after Mansinha and Smylie (Ref. 4), Sato and Matsu'ura (Ref. 5) and Iwasaki and Sato (Ref. 6).

Fault model and the location of the assembly

The fault models corresponding to the great earthquakes of Nankaido earthquake (1946; Type I-thrusting fault) and Nobi earthquake (1891; Type II-lateral fault) are selected as typical great earthquake models of

interplate and intraplate earthquake which accompany remarkable coseismic crustal deformations. For each earthquake, the fault models have been studied by Kanamori (Ref. 7), Fitch and Scholz (Ref. 8) and Ando (Ref. 9), and Mikumo and Ando (Ref. 10) respectively. By following their works, we assumed fault models for each type of earthquake as shown in Fig. 1.

The resultant deformations for each type of earthquake model are plotted by displacement vectors on the two orthogonal planes as shown in Figs. 2 and 3. The location of the cavern assembly is chosen for each case as X = 130km, Y = 55km, Z = 200m for Type I and X = 30km, Y = 10km, Z = 200m for Type II respectively on the cartesian coordinate system attached to these figures.

In locating the assembly, we considered a possibility of reutilization of abandoned production mines and the not so extremely short distance to the fault planes.

Then, at the origin of the coordinate system of the subsequent three dimensional finite element model of the assembly, the magnitude of displacement and strain changes became as below;

For Type I (thrusting fault); u_x=34cm, u_y=-272cm, u_z=127cm
$e_{xx}=7.57\times10^{-6}$, $e_{yy}=2.87\times10^{-5}$, $e_{zz}=-1.21\times10^{-5}$
$e_{xy}=1.87\times10^{-5}$, $e_{yz}=3.76\times10^{-7}$, $e_{zx}=-1.56\times10^{-7}$

For Type II (lateral fault); u_x=-126cm, u_y=-47cm, u_z=-1.5cm
$e_{xx}=4.03\times10^{-5}$, $e_{yy}=-7.38\times10^{-6}$, $e_{zz}=-1.10\times10^{-5}$
$e_{xy}=2.71\times10^{-5}$, $e_{yz}= 1.77\times10^{-8}$, $e_{zx}=-6.83\times10^{-7}$

STRUCTURAL ANALYSES

The central portion of an assumed cavern assembly shown in Fig. 4 is extracted and idealized in the finite element model (model-1) as shown in Fig. 5, in which the definition of the cartesian coordinate system and dimensions are indicated. In this model, individual caverns are treated simply as cavities. The displacement distributions calculated by foregoing analyses are introduced in the boundary nodes of this model-1 and then the resultant displacements of the nodes close to a cavity in the central part of the model-1 are transmitted to the boundary nodes on the detailed model (model-2) shown in Fig. 6 which includes the lining concrete and the surrounding rock boundary.

The analyses are carried out for Type I and Type II earthquakes. The material properties used for analyses are shown in Table 1.

Analyses on Model-1 and Model-2

Model-1 involves 7 caverns in 3 rows arranged in a longitudinal direction of the cavern which are extracted from the central part of the cavern assembly. The calculated unit crustal deformations at the site for each

earthquake were applied to the boundary nodes of the model as the relative values to those described in the foregoing section at the origin of the coordinate.

The resultant displacements of the nodes on the model-1 were applied to the boundary nodes on the model-2 as shown in Figs. 7(a) and (b). In this model, the initial stress of the rock surrounding the cavern due to overburden pressure of subsurface layer were calculated on the transverse section of the cavern by assuming a plane strain state and the initial stress of lining concrete were neglected in this analyses because the normal design loads due to heterogeneity of rock formation and time dependent change of stress and deformation of the rock just surrounding the lining concrete were out of scope of this paper and they should be adequately superposed with those from the analyses of this time.

RESULTS AND DISCUSSION

The results are presented in illustrative manner in Figs. 8(a) and (b). Due to geometrical location of the cavern assembly regarding subjective fault planes, the induced relative displacements to the model boundaries on the model-2 controlled the behavior of the model; For thrust faulting type, tensile stress in x and y, and compressive stress in z direction prevailed with shear stress along vertical direction. For lateral faulting type, tensile stress in x and z, and compressive stress in y direction prevailed with shear stress in the horizontal plane.

The stress in the rock surrounding the cavity due to the crustal deformation changes applied is negligibly small by 10 percent of that due to overburden load, for both cases of earthquakes.

Therefore the stability of rock itself could seem insensitive for crustal deformation changes, if an adequate design for normal load for the cavern assembly should have been provided. However, at the crown of the lining concrete, the shear stress and tensile stress showed the maximum value of 4.6kg/cm^2 and 9.3kg/cm^2, and 6.8kg/cm^2 and 12.1kg/cm^2 for the thrust faulting type and lateral faulting type earthquake respectively. These stress levels reach the extent to which some careful attention should be paid to avoid cracking of lining concrete.

Further, this induced stresses are superposed on the stresses due to normal loads expected from heterogeneity of rock formation surrounding the cavern. Therefore, such countermeasures may be required as providing with some safety margin in the reinforcement design, for example.

ACKNOWLEDGEMENT

This study was supported by the Radioactive Waste Management Center and this support is gratefully acknowledged.

REFERENCES

1) K. Kasahara, A. Sugimura and T. Matsuda (1978), Neotectonic System, Vol. 10, chap. 1, Earth Science, (K. Kasahara and A. Sugimura; editors), Iwanami shoten.
2) R. Sato and M. Matsu'ura (1973), Static deformation due to the fault spreading over several layers in a multilayered medium, Part I; Displacement, J. Phys. Earth, 21, 227-249.
3) M. Matsu'ura and R. Sato (1975), Static deformation due to the fault spreading over several layers in a multilayered medium, Part II; Strain and tilts, J. Phys. Earth, 23, 1-29.
4) L. Mansinha and D. E. Smylie (1971), The displacement fields of inclined faults, Bull. Seism. Soc. Amer., 61, 1433-1440.
5) R. Sato and M. Matsu'ura (1974), Strain and tilts on the surface of a semi-infinite medium, J. Phys. Earth, 22, 213-221.
6) T. Iwasaki and R. Sato (1979), Strain field in a semi-infinite medium due to an inclined rectangular fault, J. Phys. Earth, 27, 285-314.
7) H. Kanamori (1972), Tectonic implication of the 1944 Tonankai and the 1946 Nankaido earthquakes, Phys. Earth Planet. Inter., 5, 129-139.
8) T. J. Fitch and C. H. Scholtz; 1971, Mechanism of underthrusting in southwest Japan: A model of convergent plate interactions, J. Geophys. Res., 76, 7260-7279.
9) M. Ando (1975), Source mechanisms and tectonic significance of historical earthquakes along the Nankai trough, Japan, Tectonophysics, 27, 119-140.
10) T. Mikumo and M. Ando (1976), A search into the faulting mechanism of the 1891 great Nobi earthquake, J. Phys. Earth, 24, 63-87.

Table-1 MATERIAL PROPERTIES USED FOR ANALYSES

	MATERIAL	UNIT WEIGHT (t/m^3)	YOUNG MODULUS (t/m^2)	POISSON'S RATIO
MODEL-1	ROCK	-	5.0×10^5	0.25
MODEL-2	ROCK	2.60	5.0×10^5	0.45* 0.25
	CONCRETE	2.40	2.1×10^6	0.167

* For initial stress analysis; in this case, the unit weight of sub-surface soil was assumed as 2.3 (t/m^3).

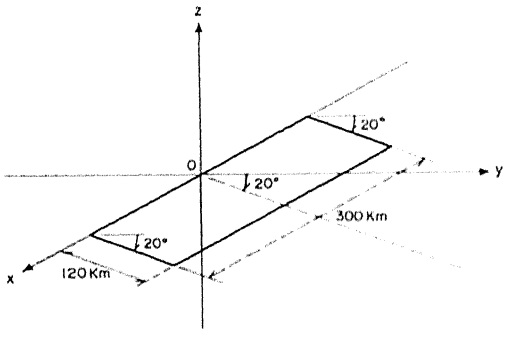

Dislocation; 6.0 m
(Pure reverse slip)

Type-I Thrusting Fault

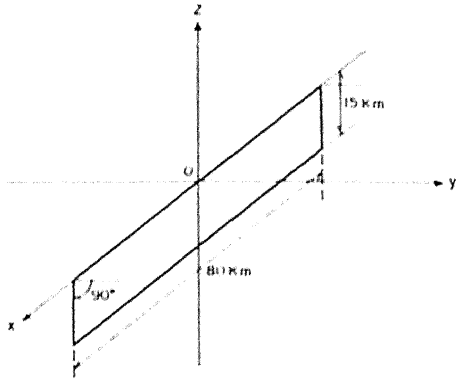

Dislocation; 6.0 m
(Pure strike slip)

Type-II Lateral Fault

Fig. 1 FAULT MODEL

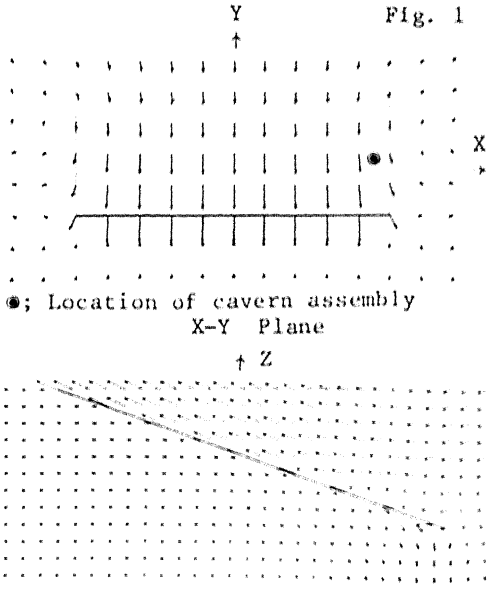

●; Location of cavern assembly
X-Y Plane

Y-Z Plane

Fig. 2 TYPE-I, DISPLACEMENT VECTORS ON THE TWO ORTHOGONAL PLANES

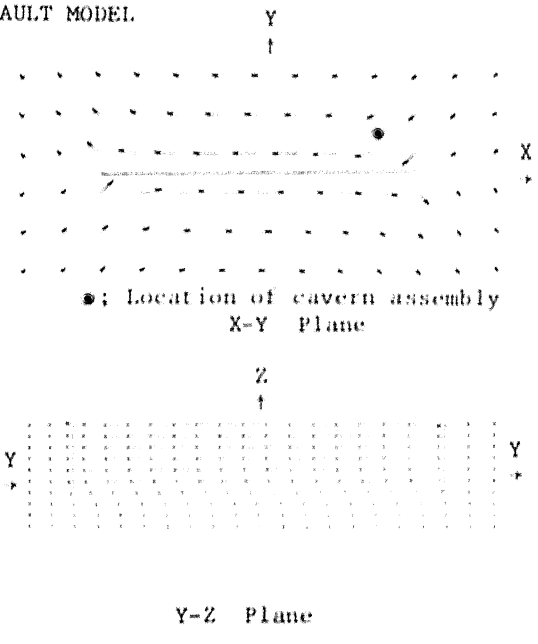

●; Location of cavern assembly
X-Y Plane

Y-Z Plane

Fig. 3 TYPE-II, DISPLACEMENT VECTORS ON THE ORTHOGONAL PLANES

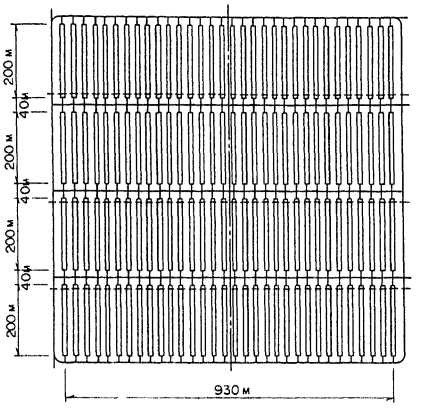

Fig. 4 ASSUMED CAVERN ASSEMBLY

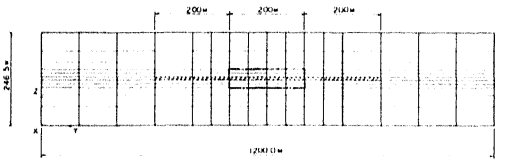

Longitudinal-section

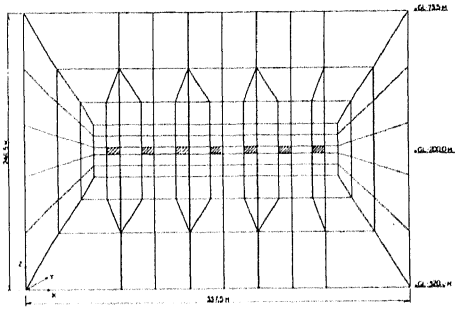

Cross-section

Fig. 5 MODEL-1

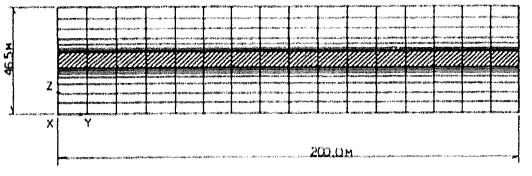

Longitudinal-section

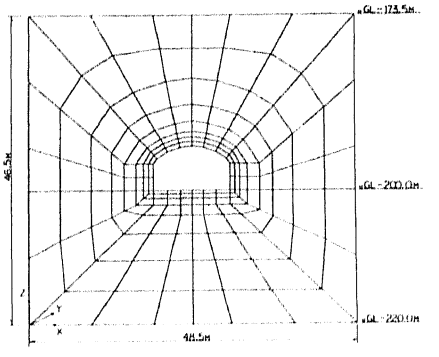

Cross-section

Fig. 6 MODEL-2

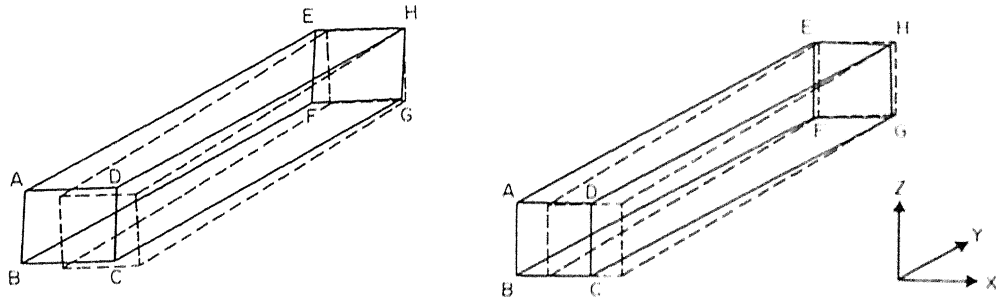

(a) Type-I (b) Type-II

Fig. 7 FORCED DISPLACEMENTS ON THE BOUNDARY NODE IN MODEL-2

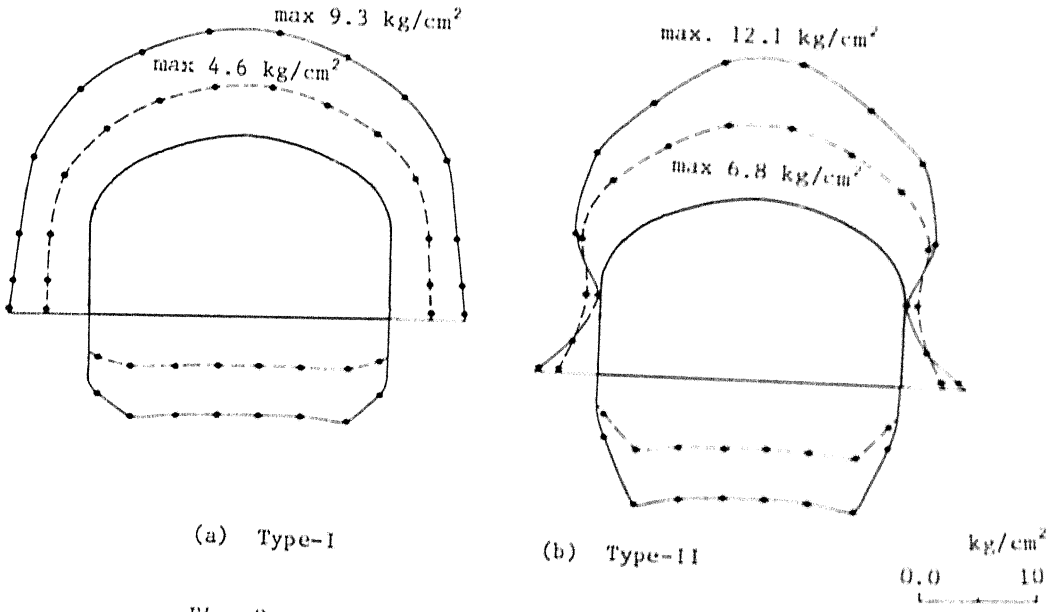

(a) Type-I (b) Type-II

Fig. 8 MAXIMUM STRESSES IN LINING CONCRETE

Maximum principal stress (Tensile)

----- Maximum shear stress