TESTS OF DUCTILE BEHAVIOR OF LIGHTWEIGHT CONCRETE COLUMNS FOR SEISMIC DESIGN

N. W. Hanson (I)
B. G. Rabbat (II)
Presenting Author: N. W. Hanson

SUMMARY

Restrictions on column hinging and on the strength of lightweight aggregate concrete for seismic resistant design are presently being considered for several building codes in the U.S.A. Restrictions are based on lack of data. An experimental investigation was conducted to develop needed data for columns subjected to simulated seismic forces. Both lightweight and normal weight concretes were included. Properly detailed columns made with lightweight concrete performed as well as columns made with normal weight concrete when subjected to moment reversals.

INTRODUCTION

The usual seismic resistant design of ductile frame buildings (Ref. 1-3) provides a relative condition of strong column and weak beams at any frame joint. That is, the summation of column moment capacities at a joint must be greater than the summation of beam moment capacities. The intent is to force hinging into the beams. The beam hinges are then the primary location to absorb energy from earthquake forces. However, there is still a possibility of column hinging. Many tests, summarized in Ref. 4, have indicated the usefulness of lateral ties to confine concrete and to delay buckling of longitudinal steel. This test program was conducted to develop data on hinging of lightweight and normal weight concrete columns subjected to simulated seismic forces.

EXPERIMENTAL PROGRAM

This section gives a brief description of the test specimens and test procedure. A more detailed description is given in Ref. 4.

Sixteen full-scale columns were tested. Each test specimen represented a portion of the building frame at the joint between column and beams. The column portion extended approximately one-half of a story above and

---

(I) Principal Structural Engineer, Portland Cement Association, Skokie, Illinois, U.S.A.

(II) Senior Structural Engineer, Portland Cement Association, Skokie, Illinois, U.S.A.

below the joint. Ratio of bottom to top column moments for each specimen as well as test program variables are given in Table 1. Column moments are calculated at a section immediately above or below the joint.

Reinforcing steel used in each column is listed in Table 1. Reinforcement details are shown in Fig. 1. Columns containing two different size bars had the larger size bars placed in the corners. Reinforcement was Grade 60 conforming to ASTM Designation: A615.(Ref. 5) Clear concrete cover was maintained at 1-1/2 in. (38 mm) in columns and beams.

Three concrete mixes were used in manufacturing the columns. Two were lightweight concretes and one was normal weight concrete. All mixes were designed for a concrete compressive strength of 5000 psi (34.5 MPa) at 14 days.

TABLE 1 - TEST PROGRAM VARIABLES

Specimen	Concrete Type	Column Size (in.)	Column Steel		Confining Hoops			Initial Axial Column Load, % of P_o**	Top to Bottom Column Moment Ratio
			Bars*	%	Bar No.	Spacing (in.)	%		
LC1	Lightweight 1	15x15	4 No. 7 & 4 No. 6	1.84	4	2	3.19	10	1.00
LC3	Lightweight 1	15x15	4 No. 7 & 4 No. 6	1.84	3	4-3/4	0.74	10	1.00
LC4	Lightweight 1	15x15	4 No. 7 & 4 No. 6	1.84	4	4	1.60	10	1.00
LC6	Lightweight 1	15x15	4 No. 7 & 4 No. 6	1.84	4	4	1.60	20	1.00
LC12	Lightweight 1	15x15	4 No. 7 & 4 No. 6	1.84	4	4	1.60	30	0.74
LC10	Lightweight 2	15x15	4 No. 7 & 4 No. 6	1.84	3	4-3/4	0.74	10	1.00
LC9	Lightweight 2	15x15	4 No. 7 & 4 No. 6	1.84	4	4	1.60	10	1.00
NC1	Normal Weight	15x15	4 No. 7 & 4 No. 6	1.84	4	4	1.60	10	1.00
NC3	Normal Weight	15x15	4 No. 7 & 4 No. 6	1.84	4	4	1.60	10	0.74
LC7	Lightweight 1	15x15	8 No. 6	1.56	4	4	1.60	10	1.00
LC8	Lightweight 2	15x15	8 No. 6	1.56	4	4	1.60	10	1.00
LC11	Lightweight 2	15x15	8 No. 6	1.56	4	4	1.60	10	0.83
NC2	Normal weight	15x15	8 No. 6	1.56	4	4	1.60	10	1.00
LC5	Lightweight 1	15x20	10 No. 6	1.47	4	3-1/2	1.57	10	1.05
LC13	Lightweight 1	15x20	10 No. 6	1.47	4	4	1.37	10	0.77
LC2	Lightweight 1	15x15	4 No. 10 & 4 No. 9	4.04	3	2-1/4	1.56	10	1.00

*Where two different column bar sizes were used, the larger bars were placed in corners.
**P_o = Column Axial Load Design Strength 1 in. = 25.4 mm

The overall test setup is shown in Fig. 2. The column of each specimen was centered in a one-million pound (4.45MN) capacity testing machine.

After attaching all instrumentation, an axial load was applied to the column. This axial load was maintained constant while the beams were loaded. When one beam end was pulled down, the other beam end was pushed up. Then the beams were unloaded and the loading sequence reversed. This

resulted in reversal of the moments in the beams and consequently in the columns. A basic series of load reversals was applied. The basic loading reversals started with two cycles to yield moment. Column drift measured at calculated column yield moment, called "yield drift," was used as reference for further cycles. Six cycles to twice yield drift, followed by 4 cycles to 4 times yield drift, and 3 cycles to 8 times yield drift completed the basic cycles. Specimens that survived the "basic loading cycles" were then subjected to higher axial loads and to additional cycles of loading. Each cycle consisted of upward and downward load on each beam.

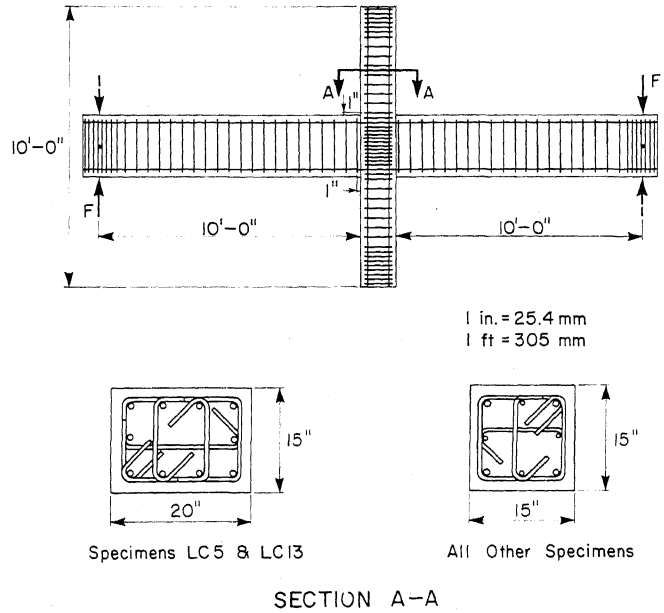

Fig. 1 Reinforcement Details

TEST RESULTS

The most important test results are described in this section. A recent report (Ref. 4) contains a detailed discussion of the investigation.

Effect of Column Confinement

The amount of confinement used in the columns varied between 0.74 and 3.19%. This percentage represents the ratio of volume of hoop reinforcement to total volume of column core. Columns containing different amounts

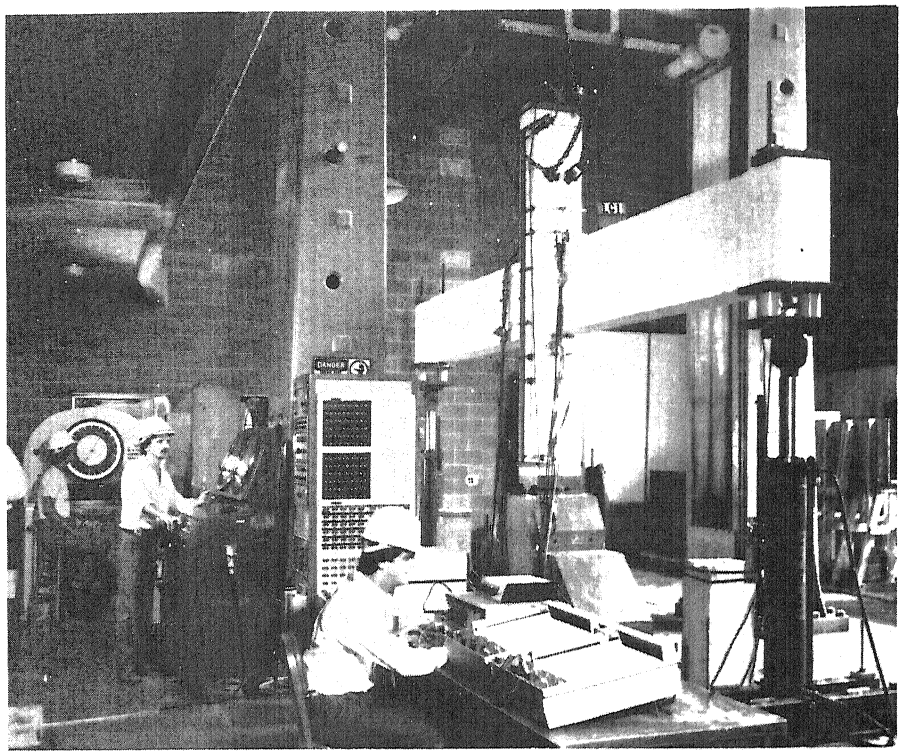

Fig. 2 Test Setup

of confinement but similar in all other respects included Specimens LC3, LC4, and LC1 manufactured with lightweight concretes. Confinement in these specimens was 0.74, 1.60, and 3.19%, respectively. Amount of confinement required by ACI 318-83 (Ref. 1) and UBC (Ref. 2) is 1.72% for normal weight concrete.

Moment versus drift loops for Specimens LC3, LC4, and LC1 are plotted in Fig. 3 for the complete test including column axial loads of 10, 20, and 30% of the column axial load design strength. During the basic loading cycles at 10% column axial load, a large amount of energy was dissipated as depicted by the large size of the hysteretic loops.

Hysteretic loops at 20% column axial load indicate adequate energy dissipation and good performance of the confining hoops for the three specimens. At 30% column axial load, the amount of energy dissipated by Specimen LC3 decreased. However, it should be emphasized that the specimen had already been subjected to 19 cycles of load reversals. This simulates the effect of several severe earthquakes. Also, in all these specimens the column hinged during the basic loading cycles under 10% axial load. A different behavior would be expected had the columns been subjected initially to higher axial loads.

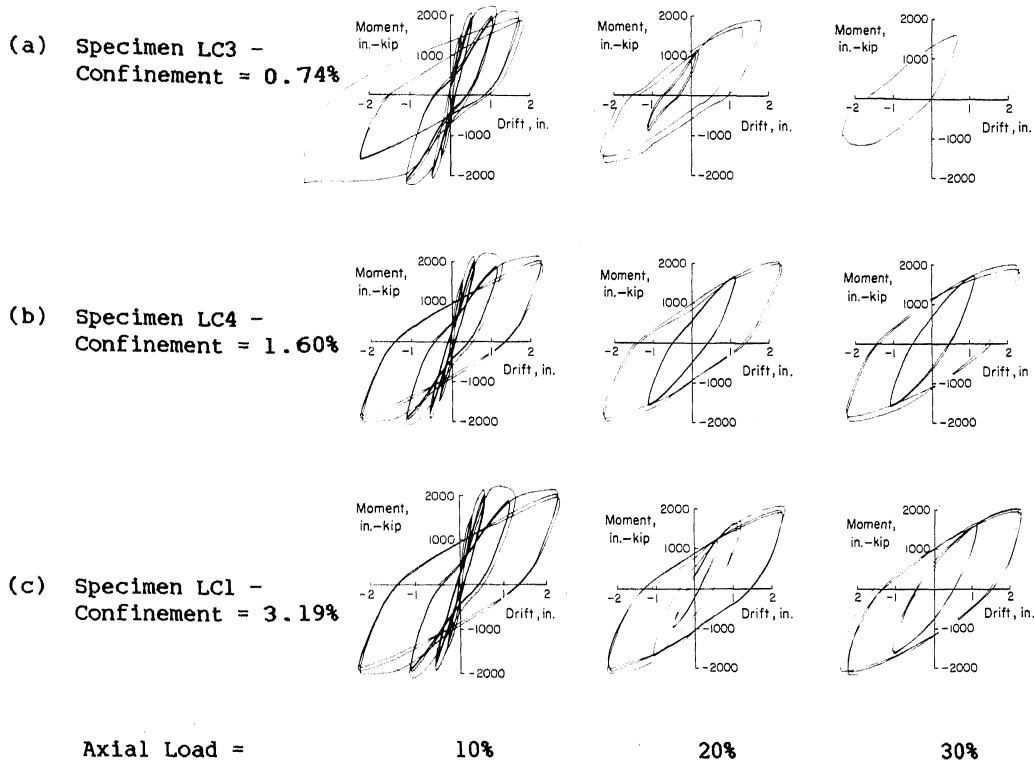

Fig. 3 Effect of Column Confinement

The minimum amount of confinement used in these tests was less than half the confinement required by ACI 318-83 (Ref. 1) and was sufficient to provide excellent ductile behavior.

Effect of Column Axial Load

Specimens LC4, LC6, and LC12 had similar column steel and confinement, and were manufactured with Lightweight Concrete 1. The columns were initially loaded to 10, 20, and 30% of the column axial load design strength, respectively.

Hysteretic loops for basic loading cycles of Specimens LC4, LC6, and LC12 are shown in Fig. 4. As would be expected, the flexural capacity of the column increased with increased column load. However, strength degradation was also higher for higher column loads. For example, Specimen LC4 with lowest axial load maintained strength while Specimen LC12 with highest axial load lost strength with additional cycles of loading.

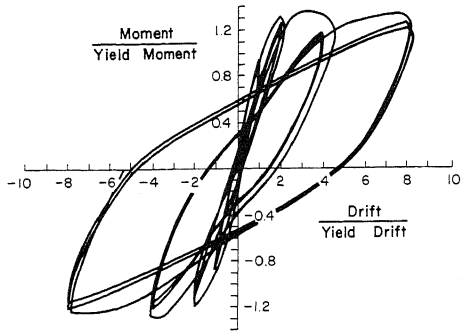

(a) Specimen LC4 - Column Load = 10%

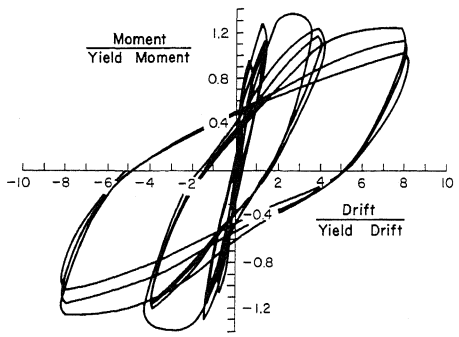

(b) Specimen LC6 - Column Load = 20%

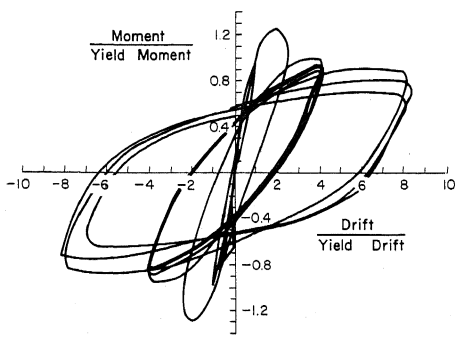

(c) Specimen LC12 - Column Load = 30%

Fig. 4 Effect of Magnitude of Column Axial Load

Effect of Concrete Type

Excellent energy dissipation was demonstrated by specimens made with the two lightweight aggregate concretes and the normal weight concrete. Drift at first yield for lightweight concrete columns was greater than drift at first yield for normal weight concrete columns. Comparison of moment versus drift plots indicate that lightweight concrete and normal weight concrete columns have comparable seismic behavior.

CONCLUSIONS

Based on the results of the experimental investigation, the following conclusions are made:

1. Reinforced concrete columns with properly detailed reinforcement provided ductility and maintained strength when subjected to inelastic deformations from moment reversals.

2. Properly detailed columns made with lightweight concrete performed as well as columns made with normal weight concrete when subjected to moment reversals.

3. Supplementary crossties engaging the column steel performed very satisfactorily in confining the column core. These crossties had a 135° hook at one end and a 90° hook at the other end. Crossties were alternated end for end along the column.

4. Requirements for column confinement in ACI 318-83 are conservative for normal weight concrete columns with axial loads up to 30% of the column design strength. These requirements can be extended to lightweight concrete columns with concrete strengths up to 6000 psi.

5. Simultaneous hinging of columns above and below a joint resulted in pinching of the load-deformation hysteresis loops.

ACKNOWLEDGMENTS

This investigation was performed in the Structural Development Department of Construction Technology Laboratories, a Division of Portland Cement Association.

The investigation was jointly sponsored by National Science Foundation (NSF), under Grant No. PFR-7902611 and the Portland Cement Association.

Any opinions, findings and conclusions are those of the authors and do not necessarily reflect the views of the National Science Foundation.

REFERENCES

1. Building Code Requirements for Reinforced Concrete (ACI 318-83),

ACI Committee 318, American Concrete Institute, Detroit, Michigan, November 1983.

2. Uniform Building Code, International Conference of Building Officials, Whittier, California, 1979.

3. Tentative Provisions for the Development of Seismic Regulations for Buildings, Applied Technology Council, ATC 3-06, NBS SP-510, NSF 78-8, San Francisco, California, June 1978.

4. Rabbat, B.G., Daniel, J.I., Weinmann, T.L., and Hanson, N.W., "Seismic Behavior of Lightweight Concrete Columns," Report to National Science Foundation, Construction Technology Laboratories, Skokie, September 1982, 260 pp.; available through National Technical Information Service, Springfield, Virginia 22161, NTIS Order No. PB83-204891.

5. Standard Specification for Deformed and Plain Billet-Steel Bars for Concrete Reinforcement, A615-76a, American Society for Testing and Materials, Philadelphia, PA.