ASEISMIC DESIGN OF QUAY WALLS IN JAPAN

By RYOKICHI AMANO[1],

HISASHI AZUMA[1] and YASUMARU ISHII[1]

DETERMINATIVE FACTORS FOR THE STABILITY OF QUAY WALLS IN EARTHQUAKES

The external forces acting upon quay walls and the behavior of such walls during an earthquake will vary considerably dependent on many conditions. The type of a wall, character of the earthquake, topographical features and properties of the foundation and backfill soils are all factors capable of affecting individually and collectively the behavior of quay walls. The quay wall must be able to contain that certain kind of lateral earth pressure which results from the difference in elevations between the sea bottom and the foundation of the wall. In the aseismic design of quay walls, in connection with the bearing capacity and frictional resistance at the base of the wall, the lateral earth pressure and stability of slopes have been the most important problems. Almost all formulae concerning these problems, as used in current aseismic design, have been derived by considering that the instantaneous dynamic force is treated as static force merely by supplementing or increasing results derived from use of normal static condition formula. Accordingly, the present aseismic procedures ignore the question as to whether that earth pressure estimated corresponding to the maximum shear resistance along sliding surfaces could exist or not in an earthquake. Also little is actually known about the dynamic stability of walls. Information is necessary from actual earthquake damage surveys as well as extensive model testing to improve the present design techniques.

LATERAL EARTH PRESSURE IN AN EARTHQUAKE

Many engineers have tried to develop methods of computation for the lateral earth pressure (le-pressures) during an earthquake by utilizing mainly modifications to static state formula. Representative of this approach is the formula developed by N. Mononobe (1) and S. Okabe (2). Their formula (the M-O formula) is based on Coulomb's or Rankine's equation for the static state. At present, both methods are used widely by Japanese harbor engineers.

H. Matsuo (3) is the first Japanese engineer to perform model experiments to determine the le-pressures of sand during an earthquake. He performed quite extensive tests by vibrating test boxes filled with soils for the purpose of measuring the lateral pressures exerted on the box walls. His proposal, based upon results of his experiments, gave an almost reversed pressure distribution to that obtained by use of the M-O method. However, Matsuo also suggested the addition of a very large dynamic water pressure, due perhaps to the lowering of the seaward-side water level during an earthquake. The final magnitude of the total le-pressure calculated by his method is closely comparable to the value computed by the M-O method.

Matsuo's method was published over ten years ago and since then neither

1. Ministry of Transportation, Japanese Government

negative nor affirmative opinions have appeared. His experiments are a valuable attack on the problem. In his experiments the pressure measurements were made on a box wall fixed at the ends by the side walls of the box. This confined the movement of sand particles considerably. It seems possible that this restraint could cause enough horizontal compression of the sand particles to similate action of a rigid to semi-rigid mass. On the other hand, the M-O method is derived based upon the critical equilibrium condition along the sliding surface and it is a fair question whether such condition actually exists during an earthquake.

Action of Water Within the Backfill (Effects of Buoyancy)

If a mass submerged in water is vibrated, the effective seismic coefficient, K, in air is increased due to buoyancy to the value calculated by equation 1, (this coefficient to be applied to the buoyed weight).

$$\frac{\rho K}{(\rho - 1)} \qquad \text{..... (1)}$$

The resultant value is called the apparent intensity of an earthquake in water. The apparent intensity of an earthquake for the backfill soil below the water level is calculated by use of equation 2.

$$\frac{g_s K}{(g_s - 1)} \qquad \text{..... (2)}$$

The method used in dam design might be applied for the computation of the dynamic water pressure on the seaward (front) side of the walls. Concerning the direct application of dam design methods to the design of quay walls, the writers are critical of this approach. This criticism is prompted due to the complexity of phase differences between water pressure and le-pressures, the irregular nature of wall vibration, and also because of the very wide basin at the front surface of walls. Extensive study is needed on these and other pertinent items concerned to this study.

According to Anzo's studies (4), the dynamic pressure of water in the backfill is very small because of the soil grain resistance. The dynamic pressure must be transmitted to the soil grains and in turn this results in the increase of the le-pressure. If all dynamic mass forces of water are transmitted to particles, the mass force of the sliding wedge must include both that of soil and of water. The apparent intensity of an earthquake in water then becomes

$$\frac{\gamma K}{(\gamma - 1)} \qquad \text{..... (3)}$$

Actually, the apparent K -value probably is somewhere between the values given by equations 2 and 3.

STABILITY OF SLOPES IN AN EARTHQUAKE

There have been no outstanding study programs devoted to this problem. Attempts have been made, however, to constitute computation methods analogous to those for the condition of the static state. M. Kurata (5) computed stability numbers by the same general method of Taylor's toe circle. In his computations only circles are selected as sliding surfaces although sliding along plane surfaces through the toe is sometimes rather dangerous.

T. Tateishi (6) computed stability factors for base failure in clay stratum by the sliding circle method (Fig. 1). This figure shows that the stability factor decreases quite rapidly with an increase of κ , and such decrease is far more rapid below the water level because of the apparent intensity of κ . In spite of low indicated stability factors, large base failures have never been observed in damage investigations. This will be explained later in the paper.

BEARING CAPACITY IN AN EARTHQUAKE

The bearing capacity in the static state has been studied by many investigators from many standpoints. Representative of these studies are those of: a. Rankine's method; b. H. Krey's and W. Fellenius's method; and c. Methods based upon Prandtle's plastic theory, such as those of Reïssner, A. Caquot, K. Terzaghi, T. Mizuno and K. Hoshino. These methods are explained in most textbooks on soils mechanics. All these methods are concerned with only vertical loads. However, in an earthquake it is apparent that horizontal components of load must be taken into account. Unfortunately there are very few studies on the bearing capacity for inclined loads.

T. Tateishi expanded Fellenius's method on the bearing capacity determination of clay and sand strata for inclined loads in an earthquake. He found that sliding along the base is the most likely failure. This tendency can be prevented by providing special soils in the critical area of the foundation as well as taking measures to see that the entire foundation is carefully constructed. Shallow sliding surfaces then become critical. Tateishi also found that the influence of the mass force of foundation soils on the bearing capacity is negligible, excepting in cases involving deep base failure. His conclusions were that the main causes for a decrease in the bearing capacity value during an earthquake are an increase in the inclination of loads and consequent or independent changes of eccentricity.

Observation of bearing capacity formulae shows that there is large variation in the magnitude of the bearing capacity value due to small changes in the ϕ -value. Moreover, at present it is almost impossible to make an exact determination of ϕ -values, especially that value existing during an earthquake. Any settlement of a sand layer in vibration could change completely the pattern of the stress distribution which is accompanied by a decrease of the ϕ -value. Therefore, computations can express at present nothing more than general tendencies.

Recently, Y. Ishii conducted extensive model experiments on a large capacity shaking table to determine from vibrations the failure patterns of sandy soil under rigid bodies. He found that the patterns varied greatly depending upon the nature of the soil and the dimensions of the rigid body. His experiments suggest that the bearing capacity problem must be studied in close relationship to the characteristics of soil in vibrations.

SETTLEMENT OF SAND IN VIBRATION

That sand layers settle easily in vibrations is a fact recognized from experiments (7) as well as observations in the field. The magnitude

of this type of settlement differs due to varying properties of sand but generally, dependent upon the initial void ratio, increases with the intensity and duration of vibration. This settlement often is the cause of the failure of harbor structures, especially of aprons or of warehouses located near quay walls. Sand particles in a loose state are considered to have enough movement during vibrations to cause the decrease of the internal friction angle which results in the decrease of the stability of slopes and the bearing capacity. On the other hand clay soils are comparatively stable in vibrations.

ASEISMIC DESIGN OF QUAY WALLS

As stated previously, the present knowledge of the dynamic behavior of quay walls, backfills, foundation soil structures, and hydraulic actions is limited. It is insufficient to serve as the basis for any precise method of aseismic design. Therefore, our main reliance must be placed on experience gained from damage survey and experimental results.

The first problem connected with aseismic design is, of course, the estimation of intensities and characteristics of earthquake motion. The magnitudes of earthquakes have such a wide range as to have almost no meaning for engineering purposes. Moreover, precise records are very scarce. The design κ-value, which represents the earthquake intensity, must be determined from past damage records, the site geological and topographical conditions, and of course economics are involved. At present there is no formal regulation on earthquake design intensity values for harbor structures. In Japan, it is customary to establish such value based upon the importance of the structure and the seismological history of the area. Usually, values of between 0.05 to 0.25 g are chosen for the horizontal acceleration and the vertical acceleration is neglected customarily. As a slight increase in the design κ-value can have a large effect on the construction cost, the deciding factor can often be dependent on economic or political decisions.

All aseismic design procedures follow those established for the static state merely by supplementing the equivalent static forces by $\kappa\rho$. At present such factors of earthquake motion as the period or amplitude are not considered.

1. Gravity Type Quay Walls (Gt-walls).

Gt-walls are very popular with Japanese engineers because of the low cost and simplicity of construction. Main external forces on the wall are active le-pressures, dynamic water pressures and the mass force of the wall itself. The M-O equation is used generally for the computation of le-pressures. Y. Ishii (8) amended the current computation method of le-pressures below the water level. Water pressure is estimated to be 50 cm or the same as that due to tidal action. From inspection of Fig. 3, it is apparent that in spite of the essential difference in the derivation of formula, there is negligible difference in the values for pressure derived by Matsuo's and the M-O method.

The walls are designed customarily so that the ratio of horizontal to vertical components of the total lateral forces does not exceed the friction coefficient of the base and the maximum toe pressure is not

beyond the allowable bearing capacity of the foundation soil structure. The friction coefficient of the base has not received much study. The value of this coefficient is usually estimated to be 0.5 to 0.6 and is based entirely upon past experiences. In spite of numerous formulae which attempt to identify many of the possible influencing factors, the selection of the bearing capacity value used for sand and gravel is usually taken to be from 30 to 50 tons per sq m. For clay stratum Fellenius's circle method can be applied.

Therefore, in our current practice, the horizontal load is treated as if it had no effect on the bearing capacity but only on the frictional resistance of the base. Also the bearing capacity is considered only in relation to the maximum toe pressure. As explained previously, this is clearly in contradiction to experimental and other data. Tateishi's computation is believed to give results better suited for such cases. In Tateishi's method, however, no consideration is made of the high compressed zone just below the base. Therefore, if the stratum just below the base is prepared by special procedures, such as a highly compacted rubble stone construction, the computations performed along shallow sliding circles by his method would be preferable.

Bearing capacity formulae are developed usually for strip loads, whereas in the case of quay walls, the loads on the foundation stratum do not have necessarily a finite width because they are always backfilled. This backfill surely can be taken as a part of the loads on the foundation. Moreover, when the foundation soil structure consists of clay, the increase of cohesion by consolidation due to backfill loads is considerable and should be considered in design. In this connection, Y. Ishii suggests that the stability computation be made along the sliding surfaces, shown in Figs. 3 and 4, which probably connect the sliding surfaces for the wedge of active le-pressure and shallow sliding circle by Tateishi. These sliding surfaces portray the settlement of the wall at the toe and the sliding commonly observed in earthquake damage surveys on Gt-walls. Fig. 2 shows typical relationships between width and height of Gt-walls in Japan.

2. Sheetpile Bulkheads.

Because of ease of construction in the field, sheetpile bulkheads are being used widely in Japan. Y. Ishii (8) suggested an aseismic design procedure based upon on his experience and on G. P. Tschebotarioff's extensive studies on the static state (9). According to Ishii's suggestion, all computations should follow Tschebotarioff's static state computations except: a. Active and passive le-pressure are computed by the M-O method for earthquakes, and b. The embedded length is to be 120 percent of that computed by the free-earth support method.

Sheetpile bulkheads with relieving platforms are also used. The horizontal mass force of the platform and the fill upon it is considerable in an earthquake. Therefore, in the design of the bulkhead, a balancing of the height of the platform and the bearing capacity of the batter piles is the key point of the design.

3. Trestle type Walls with Small Retaining Walls (Marginal Wall).

In this type of wall there is no backfill. The le-pressure is sustained by a covering on the slope and by the small retaining wall.

This type of wall is constructed on relatively soft foundations because of low maximum toe pressure and less lateral force than large Gt-walls. Computations of the stability along toe and base circles must be performed.

4. Trestle Type Pier (Piers With Deck Structure).

The active le-pressure does not have any effect on this type. Therefore, it is the most stable type in an earthquake. All lateral forces exerted during an earthquake are resisted by the friction between the base of the walls and foundation soils or by the lateral resistance to the embedded portions of the structure. Recently, this type of pier has been constructed in the Yokohama and Kobe ports. The trestle pier is quite expensive and if improvements in cargo handling would allow a narrower pier, it would become more popular. In the design, only the normal structural considerations are necessary.

EARTHQUAKE DAMAGE TO QUAY WALLS

The earthquakes referred to in this section are listed in Table 1 together with pertinent information.

1. Gt-walls in Kushiro Port as Damaged by the Tokachioki Earthquake of 1952.

Fig. 3 shows the damage state of these walls. As noted, there occurred settlement and outward sliding of the walls with neither overturning nor foundation base failure. These damage features are common to quay walls. Due to no accurate records being available of this earthquake's intensity, computations were performed for various K-values. Fig.3 shows H/V ratio relationships (the ratio of the horizontal component of the total force to the vertical component) to the maximum toe pressures and K-values. If the base friction coefficient (f-value) is fixed at 0.6 ($\phi = 31°$), the critical ϕ-values for sliding become:

	by M-O $[r/(r-1)]$	by M-O $[g_s/(g_s-1)]$	by Matsuo
For 8 m wall	0.12	0.14	0.14
For 9 m wall	0.12	0.15	0.15

The settlement might have been a result of local failure due to high toe pressure or might have been due to sliding along shallow circle surfaces. Computations have been performed for shallow sliding surfaces by Tateishi's method and also following Ishii's suggestions. As can be seen from Fig. 3, both such surfaces coincide closely. Critical -values are 23, 29 and 33 degrees by Ishii's method; and 23, 29 and 32 degrees by Tateishi's method for K-values of 0, 0.1 and 0.15, respectively. The results show very little difference.

In the design of the Gt-wall, protection of the base soil structure for the maximum toe pressure and for sliding along the base must be considered with computations to be performed by Ishii's and Tateishi's methods. Fig. 3 shows critical ϕ-values by Ishii's method when the heel, point B, is shifted horizontally and vertically about 4 m. The decrease of the critical ϕ-values are considerable which indicates one procedure that can be followed for increasing the stability of such walls.

2. Gt-walls in Uno Port as Damaged by the Nankai Earthquake of 1946. Sliding along the base and slight settlement were the main damages. Settlement was retarded by foundation piles. Computations along probable sliding surfaces, under the assumption that each pile can resist a horizontal load of 15 tons, are shown in Fig. 4.

From results of the above analysis, the following additional statements can be added concerning Gt-walls: a. Damages to Gt-walls are accompanied always with settlement at the toe and sliding along the base or along shallow circles, b. Even a slight settlement by high contact pressure at the toe causes considerable increase in the reactive lateral forces and results in lowered stability, c. Computation of stability along shallow sliding surfaces is likely to be beneficial to the analysis, and d. As previously stated, the reliability of le-pressure formulae is uncertain.

3. Quay Walls in Shimizu Harbor as Damaged by the Kitaizu Earthquake in 1930, the Shizuoka Earthquake in 1935, and the Tonankai Earthquake of 1944.

Three kinds of walls were subjected to these three large earthquakes. Damages and repairs are summarized in Table 2 and shown in Fig. 5. Damages were analyzed using the following assumptions: a. The anchor had no effect, b. Only overturning moment was taken by the anchor, c. The anchor acted as to even up the pressure distribution at the base in the static state and took excess overturning moments in the earthquake, and d. The sliding resistance was effective fully and had a value of $f = 0.45$.

Analyses for the Kitaizu and Shizuoka earthquakes are summarized in Tables 3 and 4. Assumption b. seems to be a fatal one for wall-B in the Kitaizu earthquake. In the Shizuoka earthquake, assumption c. was decisive for wall-A but the reason for the sliding of wall-C is not apparent.

4. Quay Wall in Yokkaichi Port as Damaged in the Tonankai Earthquake of 1944 and the Nankai Earthquake of 1946. Quay wall in Komatsushima Port as Damaged in the Nankai Earthquake of 1946.

Failure of the wall in the port of Yokkaichi is shown in Fig. 6. The wall in the port of Komatsushima which suffered very little damage is shown in Fig. 7. From inspection of Fig. 6, it seemed conceivable that computations on the stability of sand slopes for a toe failure would indicate the cause of failure fairly well. However, no base failure was noted in spite of a far lower apparent stability than indicated by the computations (see Figs. 6 and 7). This suggests the necessity of some reconsideration on the formula for base failure in clay stratum. The reason for discrepancy might be due to: a. Effects of side friction of sliding. The sliding surface length was 150 to 200 m and was very deep. Therefore, considerable end resistance could develop, b. Lower mean earthquake intensity throughout the sliding mass due to phase difference of the seismic waves, and c. High strength of clay soils against short-time and periodic loading.

5. Sheetpile Bulkheads in Nagoya Port as Damaged in the Nankai and Tonankai Earthquakes.

Representative damage is shown in Fig. 8. In these two earthquakes almost all sheetpile bulkheads with relieving platforms were bowed forward because of sliding of the anchor plate. In spite of a comparatively short length of sheetpile embedment, no sliding of the lower part of any bulkhead was observed. As Tschebotarioff claims (9), the embedded length requirement as computed by free-earth support methods seems to be unnecessarily large. The sliding of the anchor plate seems to be a common type failure and has been observed in other earthquake damage surveys. Presumably the decrease of passive resistance near the soil surface is large due to the vibratory agitation of the soil particles. Another important observation was the severe damage at the edge of the pier. In some places the sheetpile suffered lateral web cracking. Computations are summarized in Table 5.

6. Bulkhead in Osaka Port as Damaged by the Nankai Earthquake (see Fig. 9).

In this pier the bulkhead wall placed over the relieving platform was anchored to a wall placed on the platform. Because of this, all the lateral forces resisted by the anchor were transmitted to the pile tops. Even assuming uniform distribution of lateral loading, each pile would have to resist 4.3 and 6.5 tons for $K = 0.15$ and $K = 0.2$, respectively. These values are very high and especially for pile rows placed near the face steel sheetpile.

TEST ON MODERN PIER

A new modern pier was constructed in the Port of Kobe during the years 1951 to 1955. This pier was constructed in a U -shape. One side was named the East Pier and the other the West Pier. Each pier has dimensions of 50 m width x 200 m length. Each pier consists of four blocks, with each block setting on nine caisson foundations. Typical cross-sections of the piers are shown in Fig. 10.

In the design, the K-value was determined from consideration of statistical studies of past earthquake records in Kobe, topographical and geological character of the foundation soil structure, and the nature and type of the pier structure. During and after the construction, four types of tests have been performed to determine the vibrational characteristics of the structure. These tests consisted of: a. Free vibrations from the release of initial forced structural deformation, b. Forced vibrations using a mechanical vibration generator, c. Vibrations generated by ground waves induced from an explosion, and d. Vibrations generated by seismic ground waves. All tests were conducted by H. Azuma and S. Hayashi.

1. Determination of the Design K-value.

The maximum horizontal acceleration measured at the Kobe Marine Meteorological Observatory was 104 gals. The seismological differences between the construction site and the Observatory site were investigated by geophysical exploration and measurements on actual earthquakes. The ratios of acceleration at the two sites were determined as 1 to 1.61, therefore, the maximum acceleration at the construction site was set at 0.17 g. Assuming a sine-curve vertical distribution of base shear to

each floor, the design K-values were set at: 0.17 g, 0.22 g, 0.26 g and 0.27 g, respectively, for the floors from the first to the roof.

2. Vibration Tests.

a. Free Vibrations. These vibrations were initiated by pulling on four bays in the warehouse-section of the pier by ropes attached to a tug boat, and then releasing the rope tension by cutting. Fig. 11 shows a record of the vibrations. By supplementary computation of the record, the natural first order period of vibration was determined as 0.44 sec with 1.66 as the damping ratio (16 percent of critical damping).

b. Vibration Generator. The maximum horizontal force capacity of the generator was three tons at 2000 rpm. The generator was placed on the third floor and the resonance curve obtained is shown in Fig. 12. In Fig. 12, resonance peaks are noted for periods of 0.05, 0.09, and 0.125 sec. Using deflections curves, shown in Fig. 13, the periods 0.09 and 0.125 sec are determined as second order and the period 0.05 as fourth order. First and third order period resonance were not obtained.

c. Explosion Tests. Dynamite (5.0 to 12 kg) was exploded at a distance of 800 m on the transverse axis of the pier. By combining records of the horizontal and vertical vibrations at the first floor, it was found that rocking motion of the caissons existed due to deformation of the foundation soil structure. Fig. 14 shows mean values of acceleration at each floor level.

d. Vibration by Actual Earthquakes. Records have been obtained for 10 earthquakes since 1955. These records show that vibrations induced by an earthquake are quite different from those of the explosion tests, and are quite irregular but all have indicated close corresponding wave phases for each floor. Fig. 15 shows mean values of amplitude at each floor level including those of comparatively regular shaped five-group waves. Ratios of amplitudes, differing from those of the explosion tests, are smaller at the roof level and the bottom of the pier. The periods obtained were longer (0.41 and 0.90 sec) with the number of waves of similar periods being less than obtained from the explosion tests (see Fig. 16).

The records of the vibrations show that the design K-values for each floor could be assumed as equal, with the value taken being equivalent to the maximum acceleration value of the foundation.

BIBLIOGRAPHY

1. "Aseismic Design of Civil Engineering Structures" by N. Mononobe.

2. "General Theory on Earth Pressure and Seismic Stability of Retaining Walls and Dams", by S. Okabe, Jour. of Japanese Society of Civil Engineers, Vol. 10, No. 6, (English) 1924.

3. "Experimental Studies on the Distribution of the Lateral Earth Pressure in Earthquakes", by H. Matsuo, Jour. J.S.C.E., Vol. 27, No. 2, 1941.

4. "Waterpressure on the Front and the Back Sides of Quay Walls in Earthquakes", by Z. Anzo, Report of the 3rd Conference on Engr. Technology, 1936.

5. "On Stability Factors of Slopes in Earthquakes", by M. Kurata, Trans. J.S.C.E., Vol. 38, No. 11, 1953.

6. "Computations of Stability Factors of Slopes and Bearing Capacity of Foundations in Earthquakes", by T. Tateishi, Unpublished.

7. "The Behavior of Soil During Vibration", by T. Mogami and K. Kubo, Proc. 3rd Int. Conf. on Soil Mech and Found. Engr.

   "An Experiment on Consolidation and Loosening of Sand Stratum During Vibration", by Y. Ishii and S. Hayashi, Unpublished.

8. "The Design of Sheet Pile Quay Walls", by Y. Ishii, Lectures at Harbor Engr's. Conf., 1954.

9. "Soil Mechanics, Foundations and Earth Structures", by G. P. Tschebotarioff, Mc Graw-Hill Pub. Co., 1952.

NOMENCLATURE

		Unit
ρ =	Unit weight of the mass	kg/cm^3
k =	Horizontal component of acceleration	None
g_s =	Specific weight of soil particle	kg/cm^3
γ =	Unit weight of soil mass	kg/cm^3
ϕ =	Angle of internal friction of soil	Degree
H =	Total horizontal force	kg/cm^2
V =	Total vertical force	kg/cm^2
f =	Base friction coefficient	None

FIGURE CAPTIONS

Fig. 1 Stability factors of clay stratum in an earthquake

Fig. 2 Relationship between the width and height of gravity type walls in Japan

Fig. 3 Kushiro Port
- a. Damages to quay wall in the Tokachioki earthquake.
- b. Relationship between H/V and the κ -value and between the maximum toe pressure and the κ -value.
- c. Shallow sliding surfaces by Ishii's method and by Tateishi's bearing capacity evaluation.
- d. Critical ϕ -value by various Ishii sliding circles.

Fig. 4 Uno Port
- a. Damages to quay wall in the Nankai earthquake.
- b. Critical ϕ -values by Ishii circles under the assumption that each pile can resist a horizontal load of 15 tons.

Fig. 5 Shimizu Port
- a. Damages to quay walls in the Kitaizu earthquake.
- b. Damages to quay walls in the Shizuoka earthquake.
- c. Repair of the quay walls after the Shizuoka earthquake.
- d. Location of berths

Fig. 6 Yokkaichi Port
- a. Damage to quay wall in the Tonankai earthquake
- b. Critical ϕ -values by toe circle.
- c. Critical c -value by large base failure using Tateishi's method.

Fig. 7 Komatsushima Port. Critical c-values by large base failure using Tateishi's method.

Fig. 8 Nagoya Port. Typical damage to quay walls in the Tonankai and Nankai earthquakes.

Fig. 9 Osaka Port. Damage to quay wall in the Nankai earthquake.

Fig. 10 Cross sections of No. 7 pier in Kobe Port.
- a. The west side pier.
- b. The east side pier.

Fig. 11 Result of free vibration tests from release of structural deflection induced by a tug boat.

Fig. 12 Resonance curves obtained from tests using vibration generator.

Fig. 13 Deflection curves obtained from tests using vibration generator.

Fig. 14 Floor level accelerations produced from explosion test.

Fig. 15 Floor level displacements recorded in an actual earthquake.

Fig. 16 Acceleration recording of an actual earthquake.

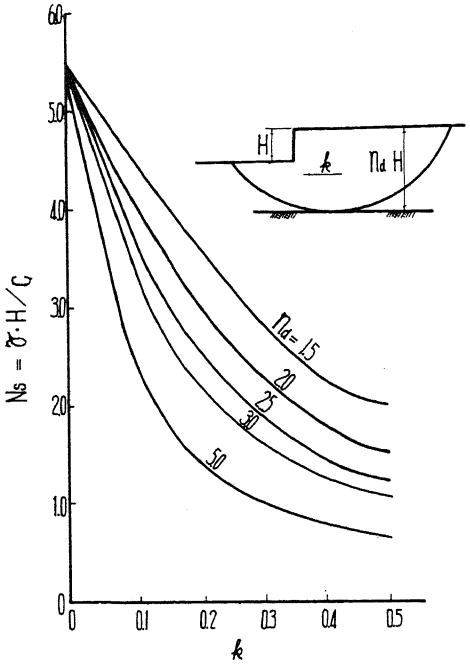

FIG. 1

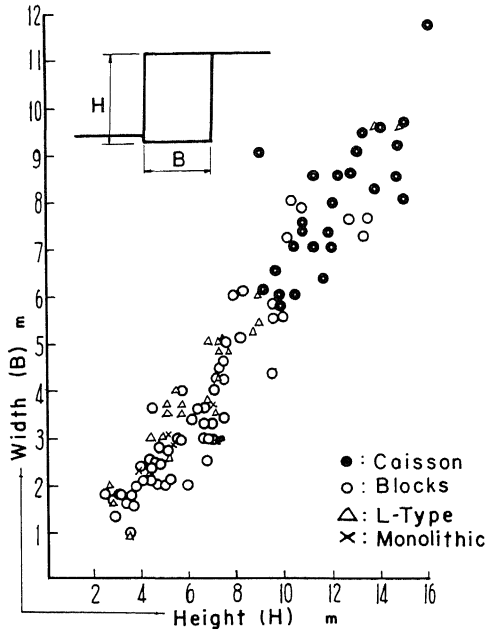

FIG. 2

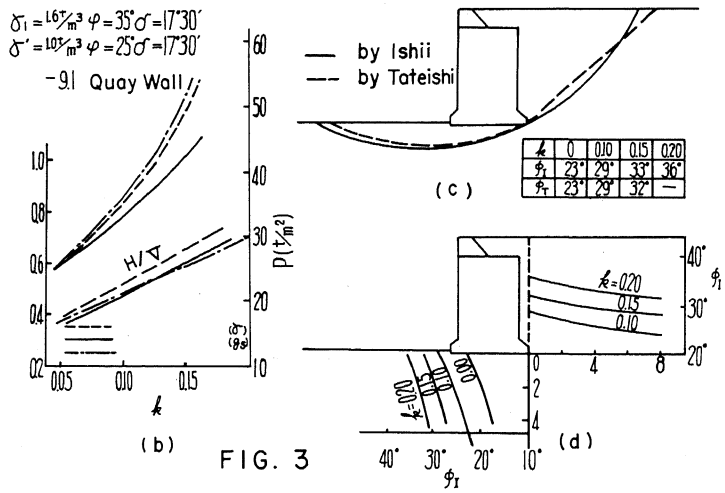

FIG. 3

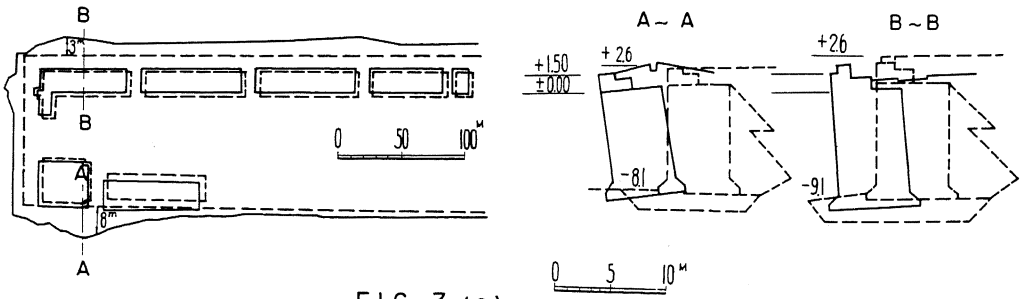

FIG. 3 (a)

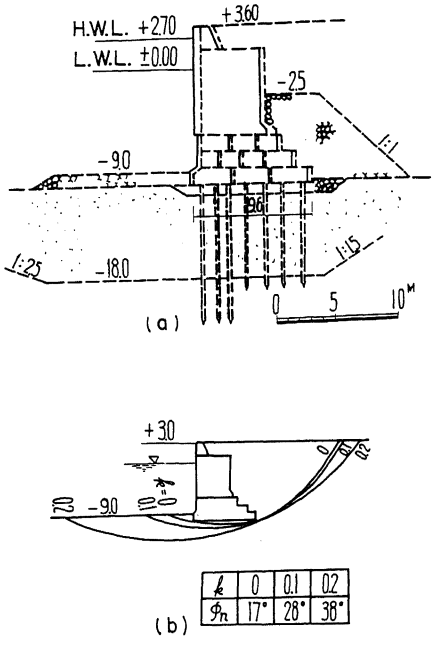

k	0	0.1	0.2
ϕ_h	17°	28°	38°

FIG. 4

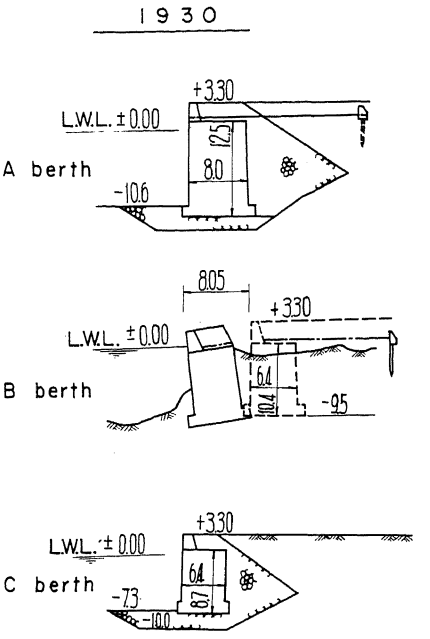

FIG. 5 (a)

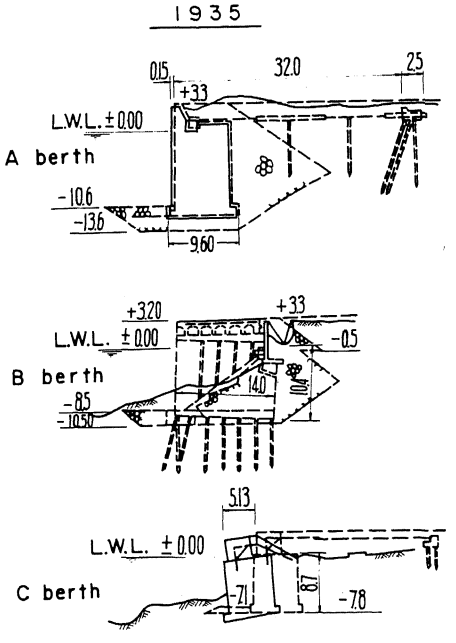

FIG. 5 (b)

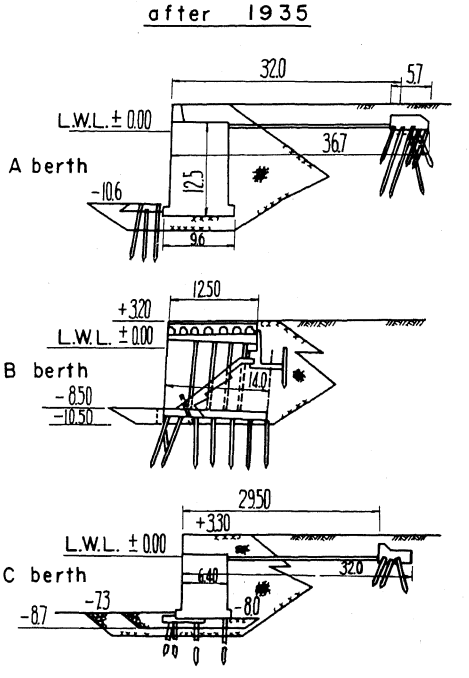

FIG. 5 (c)

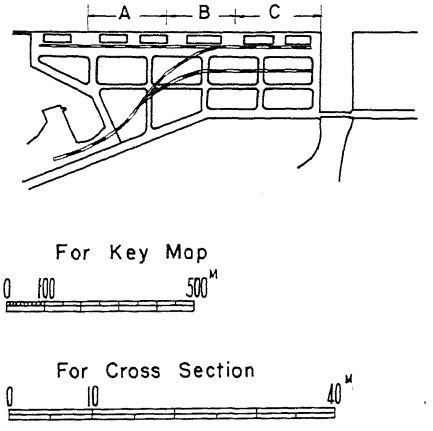

FIG. 5(d)

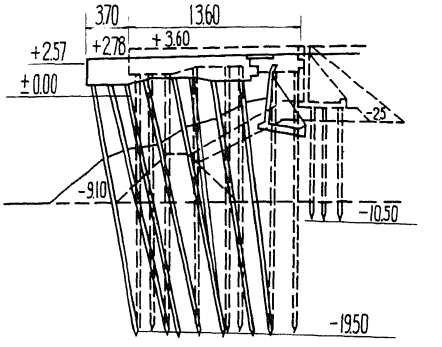

(a)

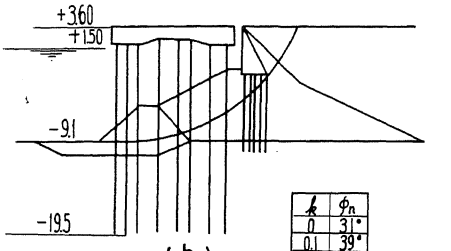

k	ϕ_n
0	31°
0.1	39°
0.2	46°

(b)

FIG. 6

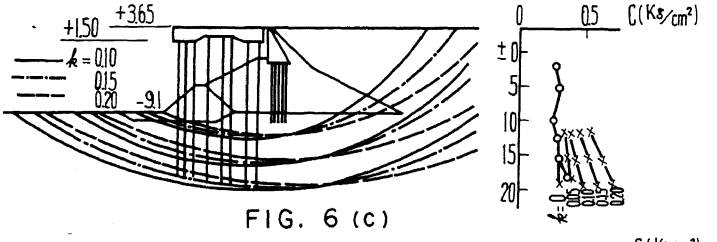

FIG. 6 (c)

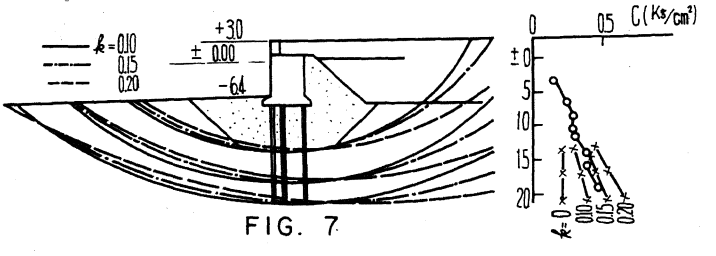

FIG. 7

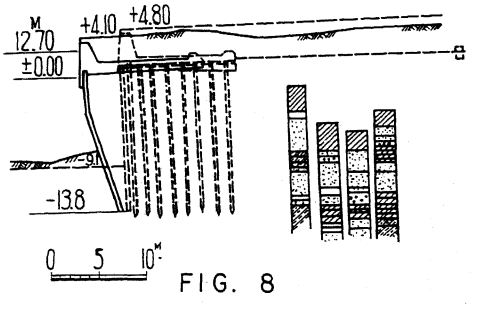

FIG. 8

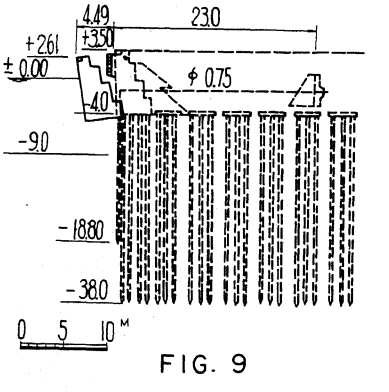

FIG. 9

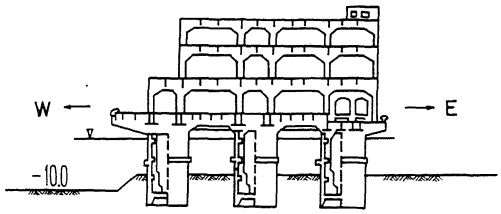

FIG. 10(a)

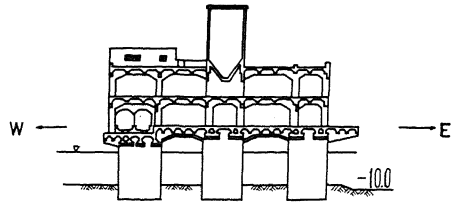

FIG. 10(b)

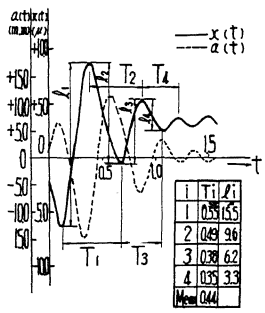

FIG. 11

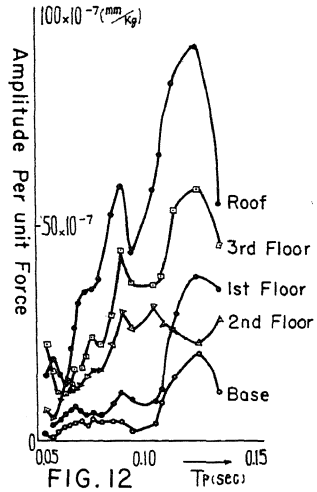

FIG. 12

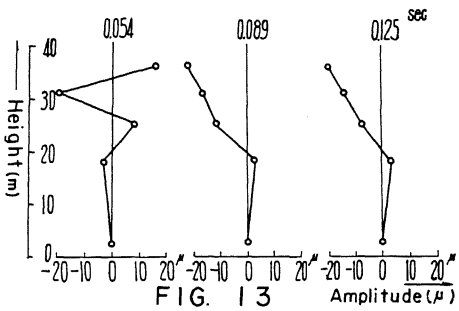

FIG. 13

West Pier 3rd Block East Pier 3rd Block

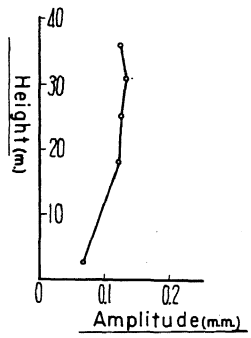

FIG. 15

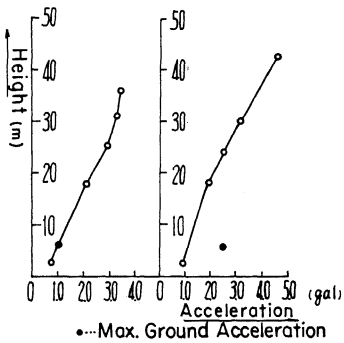

FIG. 14

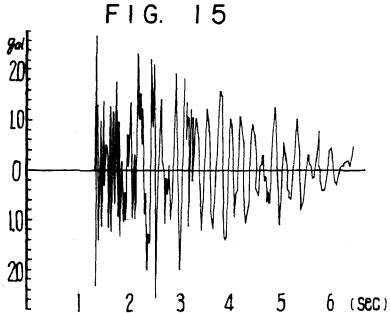

FIG. 16

EARTHQUAKE EVALUATED IN THIS REPORT

No.	Name of Earthquake	Date	Harbor	Earthquake Intensity
1	Kanto	Sept 1, 1923	Yokohama	6
2	Kitaizu	Nov 25, 1930	Shimizu	4
3	Shizuoka	Jul 11, 1935	Shimizu	
4	Tonankai	Dec. 7, 1944	Nagoya,	6
			Yokkaichi	6
			Shimizu	
5	Nankai	Dec. 21, 1946	Nagoya	5
			Yokkaichi	5
			Osaka	
			Uno	
			Komatsujima	
6	Tokachioki	Mar. 4, 1952	Kushiro	5

TABLE 1

QUAY WALL DAMAGES IN SHIMIZU HARBOR (Fig. 5)

Berth	Depth m	Type and κ-Value	Damage by Kitaizu Earthq.	Repair and est. final repair κ-value
A	-10.6	Gt-wall with anchor, 0.1*	Slight sliding	Anchor strengthened 0.15
B	-8.5	" 0.1*	Sliding	**
C	-7.3	Gt-wall, 0.1*	Slight sliding	Anchored, 0.15

Berth	Damage by Shizuoka E.	Repair and repaired κ-value	Damages by Tonankai E
A	Tie severed	Piles at front of wall. Tie strengthened. 0.25	
B	Retaining wall collapsed	Retaining wall repaired	Retaining wall sliding
C		Anchored. Piles and additional base slab 0.25	None

TABLE 2

* Very low value for base friction coefficient, $f = 0.45$, was found by field experiments. ** Caissons were rotated 90° and connected by slab.

SUMMARY OF DAMAGE ANALYSES FOR SHIMIZU HARBOR (KITAIZU EARTHQUAKE)

Assumpt.	B-berth critical κ-value	Anchor pull. T (tons)	f	Max. toe pressure. p (t/m^2)	C-berth		
					κ	f	p
A	0.09	0	0.45	42	0.1	0.45	34
B	0.15	23 *	0.41	25			
C	0.08	23 *	0.24	17.5			
C	0.15	17	0.45	31.4			

TABLE 3

* Breaking load of tie rod.

SUMMARY OF DAMAGE ANALYSES FOR SHIMIZU HARBOR (SHIZUOKA EARTHQUAKE)

Assumpt.	A-wall				B-wall			
	κ	T	f	p	κ	T	f	p
A	0.10	0	0.45	39	0.10	0	0.45	36
B	0.11	22 *	0.33	21.5	0.14	15 *	0.39	20
C	0.08	22 *	0.26	18.5	0.09	15 *	0.25	16
D	0.15	22 *	0.45	31.4	0.16	15 *	0.45	27

TABLE 4

* Breaking load of tie rod.

SUMMARY OF DAMAGE ANALYSES IN NOGOYA PORT (FIG. 8)

Friction between wall and soil	κ	Necess. Embed. length. m. **	Resistance by anchor	Lateral force per pile
0	0.1	5.9	17.5	1.0
15 *	0.1	4.2	32.5	0
15 *	0.15	4.85	30.5	2.4

TABLE 5

* for passive earth pressure
** 4.7m in prototype