13th World Conference on Earthquake Engineering
Vancouver, B.C., Canada
August 1-6, 2004
Paper No. 4

MECHANICAL BEHAVIOR OF REINFORCED CONCRETE BEAM-COLUMN ASSEMBLAGES WITH ECCENTRICITY

Tomohiko KAMIMURA[1], Hiroyasu TAKIMOTO[2], and Shinya TANAKA[3]

SUMMARY

Experimental work was carried out to study the mechanical behavior of interior beam-column subassemblage with the eccentricity between beam axes and column axes. Test specimens are four wall girder-wide column joints with large beam depth and two beam-column joints which beam depth is the same as column depth. The variables of the test series in girder-column joints are eccentricity, column longitudinal reinforcement ratio, and joint lateral reinforcement ratio. The variable of the test series in beam-column joints is eccentricity only. The mechanical behavior of beam-column subassemlages with one-sided eccentricity is discussed from the experimental results, and the ultimate strength of each test specimen is estimated using the proposed equation.

The failure mode of girder-column subassemblages with eccentricity, which were designed so that shear failure in joint after wall girder and wide-column flexural yielding should form in no consideration of eccentricity, was column torsional failure. The ultimate strength of wide column under combined torsion and shear increases with the amount of column longitudinal reinforcement and joint lateral reinforcement. Proposed equation for predicting the ultimate strength of columns under combined torsion and shear approximately gives an agreement with the test data of girder-column subassemblage. The beam-column subassemblage with eccentricity was the same failure mode as that without eccentricity and failed in joint after beam flexural yielding because of the small eccentricity. Therefore, the ultimate strength of joint can be calculated by considering the effective width and using proposed equation for the ultimate strength of joints under combined torsion and shear.

INTRODUCTION

The reinforced concrete school building of four stories with the eccentricity between narrow wall girder axes and wide column axes at Hakodate College in Japan was heavily destroyed by the 1968 Tokachioki Earthquake. From the investigation of the destroyed building, it is suggested that the heavy eccentricity between columns and beams caused torsional moments in the columns and joints, causing severe damage.

[1] Professor, Shibaura Institute of Technology, Tokyo, Japan E-mail: kamimura@sic.shibaura-it.ac.jp
[2] Graduate school, Shibaura institute of Technology, Tokyo, Japan E-mail: hiro-yasu@mx2.ttcn.ne.jp
[3] Graduate school, Shibaura institute of Technology, Tokyo, Japan E-mail: j00074@sic.shibaura-it.ac.jp

Therefore, the investigation is needed for the influence of the eccentricity among the axes of members on the mechanical behavior of beam-column subassemblages subjected to lateral loading.

The objects of this study are to give consideration to the mechanical behavior of interior beam-column subassemblage with one-sided eccentricity, and also to estimate the ultimate strength of columns and joints in such a subassemblage subjected to torsional moment.

OUTLINE OF EXPERIMENTAL WORK

Fig.1 shows an eccentric beam-column joint in typical structures. In this paper, the seismic behavior of eccentric wall girder-wide column joints and beam-column joints, which beam depth is the same as column depth, without floor slabs and transverse beams is discussed. The inflection point of the story height and the middle of the joint are in conditions without the torsional angle as shown in Fig.2. Under lateral loading, the columns and the joints are subjected to torsional moments of ${}_cM_t=e \cdot Q_c$ and ${}_jM_t=e \cdot V_j$, respectively, where e is a distance between the column axis and the beam axis, and Q_c is column shear force and V_j is joint shear force. The test specimens, which are eccentric joints removed from a plane frame by cutting the beams and columns at arbitrarily assumed inflection points, were tested in upright position, and also were subject to restraint for torsional moment at the middle of span, as shown in Fig.3. This torsional moment decreased because the beam flexural crack developed in the beam critical section. The base of the subassemblages was supported on pin-roller. The constant vertical load N=98[KN] was applied at the top of the column. The column ends were laterally supported on pin-rollers in two horizontal directions in order that the horizontal displacement in all directions and the rotation on the column axis were not occurred. Reversed cyclic loads were applied to the beam ends by four hydraulic jacks. Fig.4 shows torsional moment, shear force and torsional angle in a joint and column, where, Q_B: beam shear force, T_B and C_B: tensile and compressive resultant forces, L: beam span, H: story height, $j_B=7/8 \cdot d_b$, d_b: beam effective depth, $j_C=7/8 \cdot d_c$, d_c: column effective depth and N: column axial force.

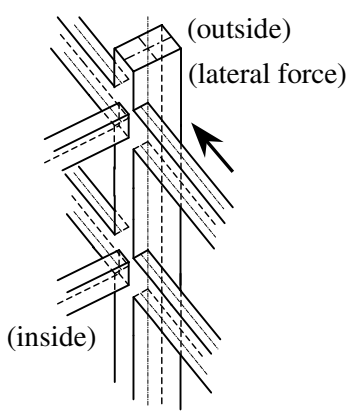

Figure 1: Beam-column assemblage with eccentricity

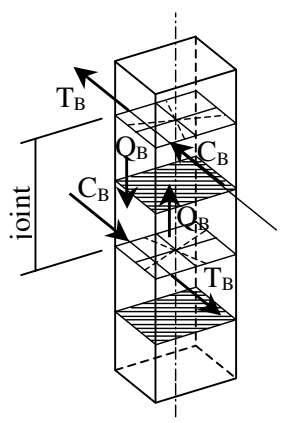

Figure 2: Torsional angle in column and joint

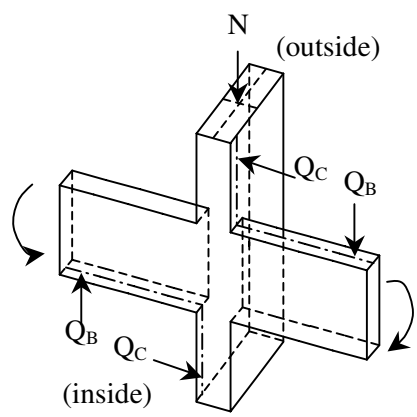

Figure 3: Loading model

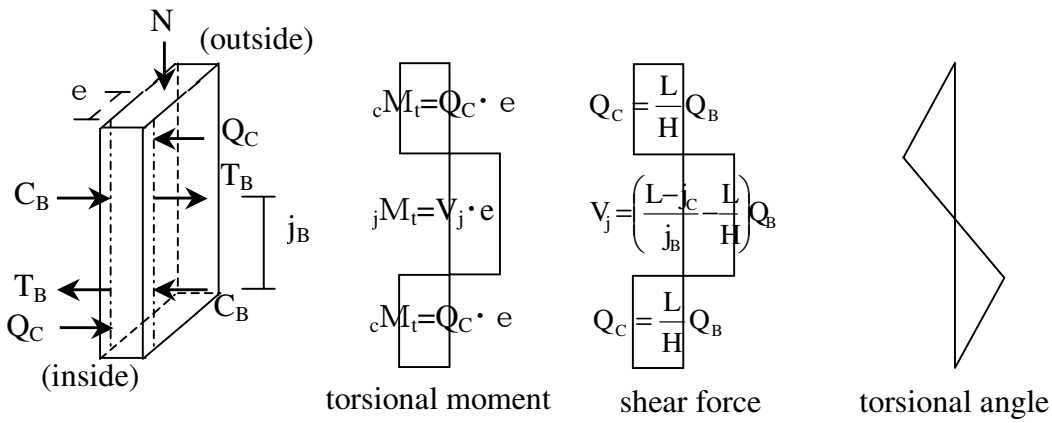

Figure 4: Stress and torsional angle in column and joint

Test specimens are four wall girder-wide column joints with large beam depth and two beam-column joints which beam depth is the same as column depth. The variables of the test series in girder-column joints as shown in Fig.5 are eccentricity, column longitudinal reinforcement ratio, and joint reinforcement ratio. The variable of the test series in beam-column joints as shown in Fig.6 is eccentricity only.

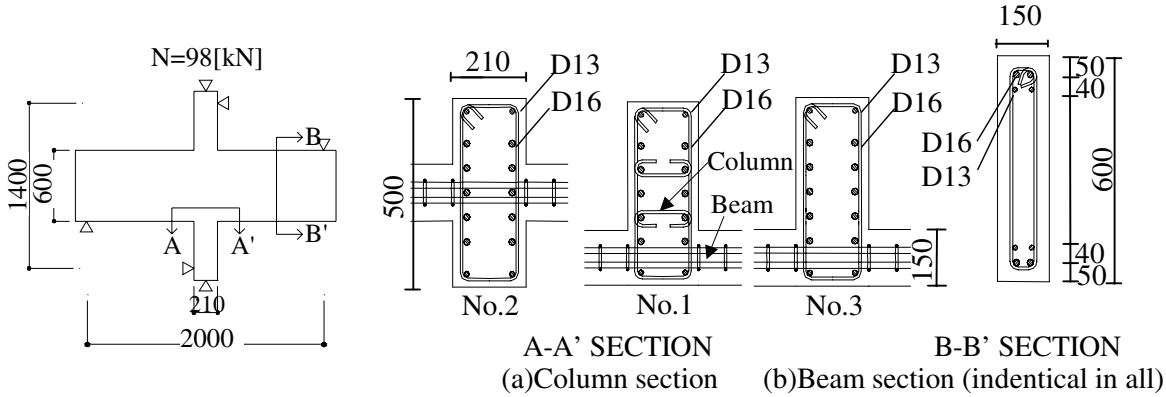

	Eccentricity		Reinforcement		
	Exist	Non	Column	Beam	Joint
Specimens	No.1		4-D13 10-D16 □－D6@50	2-D16 2-D13 □－D6@80	□－D6@50 (Tie bar : Exist)
	No.3	No.2			□－D6@50 (Tie bar : non)
	No.4		14-D13 □－D6@50		

e=175mm e: distance of eccentricity between column axes and beam axes

Figure 5: Details of specimens in wall girder-column joints and design variables (unit: mm)

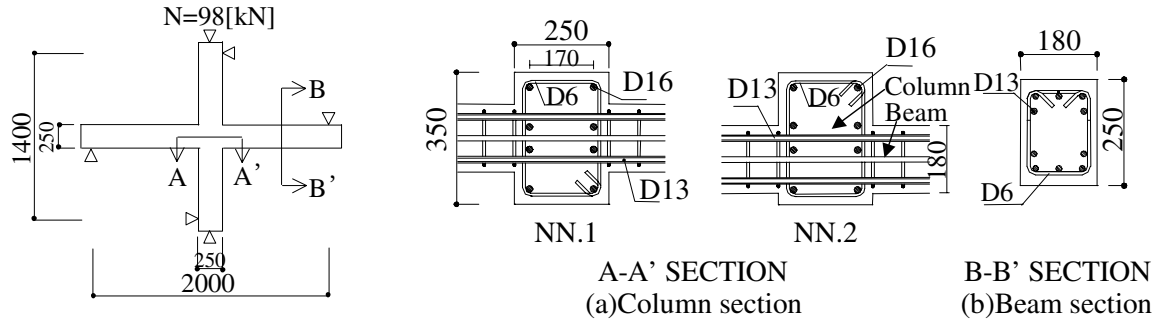

	Eccentricity		Reinforcement		
	Exist	Non	Column	Beam	Joint
Specimens	NN.2	NN.1	8-D16 □－D6@50	3-D13 2-D13 □－D6@80	□－D6@50

e=55mm

Figure 6: Details of specimens in beam-column joints and design variables (unit: mm)

Table 1: Properties of materials

Steel	Reinforcement	Yield strength σ_y [MPa]
D16	Beam bar	367
	Column bar	380
D13	Beam bar	345
	Column bar	329
D6	Hoop, Stirrup	344
Concrete Strength σ_B	No.1 ~ No.4	σ_B =28.0 [MPa]
	NN.1, NN.2	σ_B =36.2 [MPa]

EXPERIMENTAL RESULTS AND DISCUSSIONS FOR SPECIMENS OF WALL GIRDER-COLUMN ASSEMBLAGES

Observed Behavior

Fig.7 shows failure pattern of specimen No.2 without eccentricity. The flexural cracks in the beam critical sections developed and the column longitudinal reinforcement within a joint reached the yield strain. Beam flexural yielding was observed after column flexural yielding and the spalling of concrete occurred in the joint. And also the strain of joint reinforcement reached the yield strain at maximum load. Accordingly, it was concluded that the failure mode of specimen No.2 was the joint shear failure after beam and column flexural yielding.

Failure pattern at the ultimate stage of representative No.4 specimen with eccentricity is shown in Fig.7. For specimens No.1, No.3 and No.4, the failure patterns were the same. Under combined shear and torsion, column longitudinal reinforcement in the column critical section near the wall girder reached the yield strain before ultimate strength. In these specimens, although the side face of the column near the

wall girder was heavily damaged, the side face far from the beam suffered rather minor cracks. Therefore, it was concluded that the failure mode of specimens No.1, No.3 and No.4 was the column failure under combined shear and torsion.

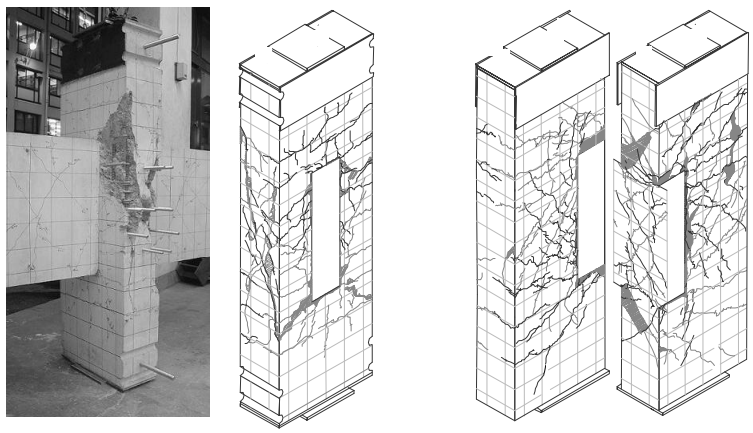

No.2 No.2 No.4

Figure 7: Crack patterns at final stage in representative specimens of wall girder-wide column Assemblages

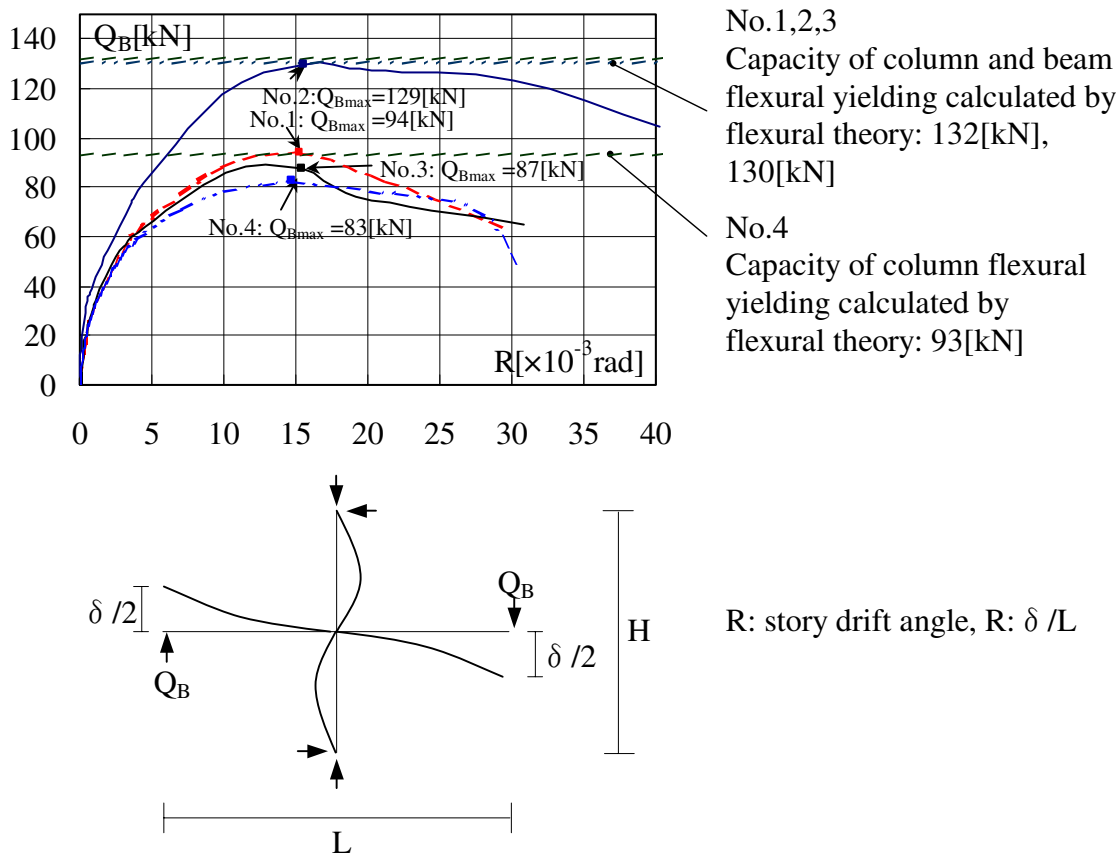

Figure 8: Beam shear-story drift angle

The envelope curves of the beam-story drift angle relations are shown in Fig.8. From Comparison between specimen No.2 and specimen No.3, it is shown that the eccentricity reduces the initial stiffness by 36.7

percent and the maximum strength by 32 percent. The maximum strength for specimen No.1 was developed 72 percent of the capacity of beam flexural yielding calculated by flexural theory [Fujii [1]].
The maximum strength for specimen No.4 was a little smaller than the capacity of column flexural yielding calculated.
From comparison of the ultimate strength in the specimens with eccentricity, the ultimate strength increases with the amount of column longitudinal reinforcement and joint lateral reinforcement. In the specimens with eccentricity, which failed in column under combined shear and torsion, the strength decay after maximum load for specimen No.4, was a little smaller than that for specimen No.1 and No.3.

Maximum strength of test specimens without eccentricity

As described above, the failure mode of specimen No.2 was the joint shear failure after beam and column flexural yielding. And the maximum strength of this specimen was approximately obtained from the beam and column flexural theory. However, for specimen No.2, the joint shear failure was developed at the maximum strength. Therefore, the joint shear strength for specimen No.2 is discussed. As shown in Fig.9(a), the slope of the concrete compressive strut in wall girder-column joint is steep due to geometrical configuration of beam-column joint, and the depth of concrete compression zone in the beam critical section is gradually reduced, because the flexural crack develops and open widely. As a result, the forces acting on the joint and column are constituted mainly of those in Fig.9(b). Accordingly, it is considered that the joint shear strength is equivalent to the ultimate strength of joint zone in Fig.9(b) and is obtained from the following equation [Architectural Institute of Japan [2]] for the shear strength of column.

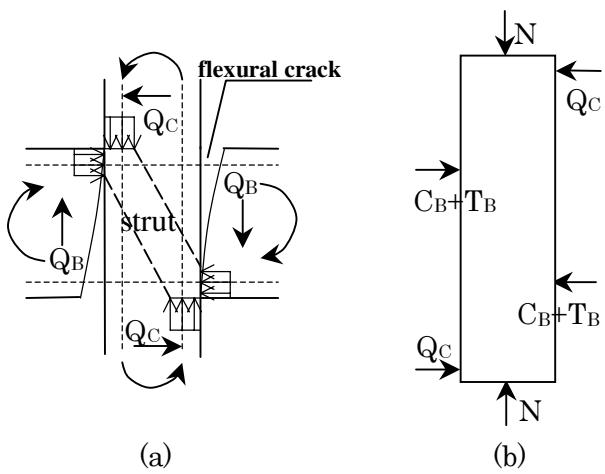

Figure 9: Forces acting on a joint

$$V_j = \left[\frac{k_u \cdot k_p (\sigma_B + 180) \cdot 0.12}{M/Qd + 0.12} + 2.7\sqrt{p_w \cdot \sigma_{wy}} + 0.1\sigma_0 \right] B \cdot j_c \text{ [unit: kgf, cm]} \quad (1)$$

where,

V_j: joint shear force
k_u: coefficient modifying scale effect as a function of effective depth
k_p: coefficient to modify effect of tensile reinforcement ($k_p=0.82(100p_t)^{0.23}$)
σ_B: compressive strength of concrete (kgf/cm^2)
M/Qd: shear span ratio in joint
P_w: web reinforcement ratio
σ_{wy}: yield strength of web reinforcement (kgf/cm^2)
B, j_c: width and distance from the centroid of compression to centroid of tension of column

σ_0: average axial stress
p_t: tensile longitudinal reinforcement ratio

In the Table 2, experimental value of joint shear force is compared with those values calculated by Eq.(1) and the following equation [Architectural Institute of Japan [3]] for the ultimate joint shear strength.

$$V_j = \kappa \cdot \phi \cdot F_j \cdot b_j \cdot D \tag{2}$$

where, κ =1.0, ϕ =0.85, F_j=0.8$\times$ $\sigma_B^{0.7}$(N/mm^2), D: column depth, b_j : effective column width.

Table 2 : Comparison of calculated joint shear force and measured joint shear force (unit : kN)

	Adopted Equation	joint shear force
V_j	experimental value(see in Fig 4)	327.0
V_{j1}	calculated by Eq.(1)	328.7
V_{j2}	calculated by Eq.(2)	374.6

Joint shear force at the ultimate joint shear strength calculated by Eq.(1) is a little larger than that at the maximum strength. As compared with the maximum strength in the experiment, the proposed equation for the shear strength of column gives prediction of the joint shear strength of wall girder-column joint.

Maximum strength of test specimens with Eccentricity

The failure mode of test specimens with eccentricity was torsional failure in column. The maximum strength of test specimens is compared with the capacity of column subjected to combined bending-shear and torsion calculated by the following proposed equation [Architectural Institute of Japan [4]].

$$\left(\frac{{}_cM_t}{{}_cM_{to}}\right)^2 + \left(\frac{Q_c}{Q_{cu}}\right)^2 = 1 \tag{3}$$

Where, ${}_cM_{to}$: the column pure torsional capacity, Q_{cu} : the column shear strength.
The formula of calculating the pure torsional capacity ${}_cM_{to}$ taking into account of the torsional span ratio is given by the following equation.

$${}_cM_{to} = \left(0.8\sqrt{\sigma_B} + 0.45p_w \cdot \sigma_{wy}\right)B^2 \cdot D \Big/ \sqrt{a/D} \quad \text{[unit: kgf, cm]} \tag{4}$$

Where, B and D : the short and long dimension of the rectangular cross section of a column and a : the net length of a member subjected to torsion.
The column shear strength Q_{cu} is calculated by the following equation.

$$Q_{cu} = \left[\frac{0.053p_t^{0.23}(\sigma_B + 180)}{M/Qd + 0.12} + 2.7\sqrt{p_w \cdot \sigma_{wy}} + 0.1\sigma_0\right]0.8B \cdot D \quad \text{[unit: kgf, cm]} \tag{5}$$

Where, d: effective column depth.

The comparison of maximum strength and the capacity of column calculated by Eq.(3) is shown in Table3. For specimens No.1,No.3 and No.4, the maximum strengths are a little smaller than the capacities of column calculated by Eq.(3).

Table 3: Comparison of maximum strength with the capacity of column calculated by Eq.(3) (unit:kN)

Specimen	No.1	No.3	No.4
Q_{ce}	134.4	124.9	118.2
Q_c	147.5	147.5	144.6
Q_{ce}/Q_c	0.91	0.85	0.82

Q_{ce} : column shear force at maximum strength (experiment value)
Q_c : column shear force at capacity of column calculated by Eq.(3)

The stresses in column longitudinal reinforcement near the beam and far from the beam at column critical section are shown in Fig.10 These stresses indicate the contribution of tensile column longitudinal reinforcement to the column flexural strength. Therefore, the maximum strength for specimen No.4 was nearly equal to the capacity of column flexural yielding calculated by flexural theory.

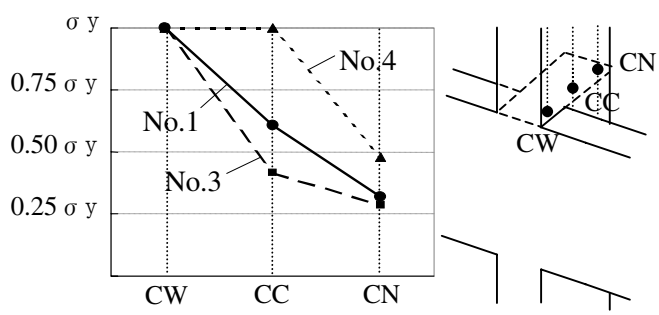

Figure 10: Stresses of column bars at column critical section

EXPERIMENTAL RESULTS AND DISCUSSIONS FOR SPECIMENS OF BEAM-COLUMN ASSEMBLAGES

Observed Behavior

Fig.11 shows failure pattern of specimens NN.1 and NN.2. For specimen NN.1 without eccentricity, beam flexural yielding was observed and the spalling of concrete occurred in the joint. The joint hoop reached yield strain. Accordingly, the failure mode of specimen NN.1 was the joint shear failure after beam flexural yielding. For specimen NN.2 with eccentricity, beam longitudinal reinforcement in the beam critical section and the joint hoop reached the yield strain at ultimate strength. And also, column longitudinal reinforcement in the column critical section near the beam reached the yield strain at the final stage. The crushing of concrete in the joint and the spalling of concrete in the beam and column critical section occurred. Therefore, the failure mode of specimen NN.2 was the same for specimen NN.1.

The curves of beam shear-story drift angle relationships are shown in Fig.12. It is shown that the eccentricity reduces the initial stiffness by 10 percent. For specimens NN.1 and NN.2, the ultimate

.

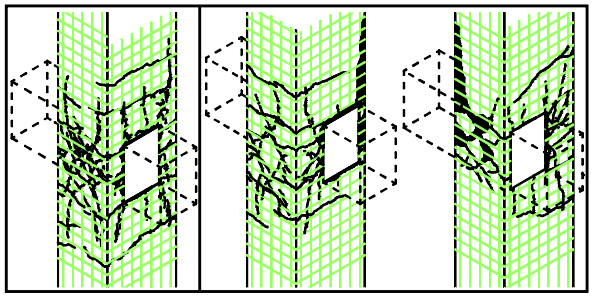

Figure 11: Crack patterns at final stage in specimens of beam-column assemblages

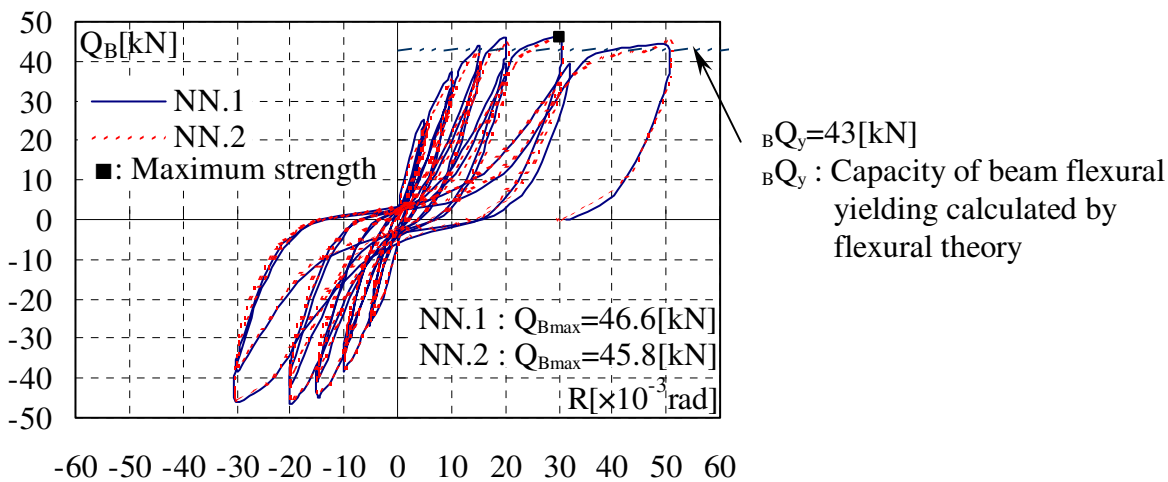

Figure 12: Beam shear-story drift angle

strengths are equal to the capacity of beam flexural yielding calculated by flexural theory. The strength decay after maximum load for NN.1 was the same for specimen NN.2. This result indicates that the small eccentricity does not have a influence on the ultimate strength and the strength decay.

Maximum strength of test specimens

Table 4 shows the comparison of maximum joint shear strength with the capacity of joint calculated by Eq.(2). Specimen NN.2 with eccentricity is the same failure mode as specimen NN.1 without eccentricity and failed in joint after beam flexural yielding because of the small eccentricity. Therefore, experimental value of joint shear force is compared with the value calculated by Eq.(2) for the ultimate joint shear strength without eccentricity. As a result, Eq.(2) gives a good agreement with the test data on the ultimate joint shear strength.

Table 4: Comparison of maximum joint shear strength with the capacity of column calculated by Eq.(2) (unit: kN)

Specimen	NN.1	NN.2
V_{je}	426.5	419.4
V_{ju}	441.2	428.7
V_{je}/V_{ju}	0.97	0.98

V_{je} : joint shear force at maximum strength (experiment value)

V_{ju} : joint shear force calculated by Eq.(2)

Maximum joint shear strength is compared with the capacity of joint subjected to shear and torsion. But no formula of calculating ultimate strength of joint with eccentricity has ever been given. A failure criteria equation (6) for the joint is used in the same way as for the column.

$$\left(\frac{{}_jM_t}{{}_jM_{to}}\right)^2 + \left(\frac{V_j}{V_{ju}}\right)^2 = 1 \tag{6}$$

Where ${}_jM_{to}$ is the joint pure torsional capacity and is given by Eq.(4). V_{ju} is the joint shear capacity without eccentricity and is given by Eq.(2).For specimen NN.2, the joint shear force at maximum strength is 419.6kN and the capacity of joint calculated by Eq.(6) is 373.7kN. The difference between the maximum strength and the value obtained from Eq.(6) is by 12 percent.

CONCLUSIONS

The following conclusions may be drawn from the test results and the analysis for predicting the ultimate strength of columns and joints subject to combined torsion and shear.

(1) The failure mode of girder-column assemblages without eccentricity was shear failure in joint after wall girder and wide-column flexural yielding, but that with eccentricity was torsional failure in column subject to combined torsion and shear. The ultimate strength of column with eccentricity is less than that without eccentricity from 20 to 30 percent.
(2) In the specimens with eccentricity, the column critical section near the wall girder is heavily damaged. The ultimate strength of wide column under combined torsion and shear increases with the amount of column longitudinal reinforcement and joint lateral reinforcement.
(3) Proposed equation for predicting the ultimate strength of columns under combined torsion and shear approximately gives an agreement with the test data on the ultimate strength of column in girder-column subassemblage.
(4) The beam-column subassemblage with eccentricity is the same failure mode as that without eccentricity and failed in joint after beam flexural yielding because of the small eccentric ratio e/B=0.157, where e is a distance between the column axis and the beam axis, and B is column width.
(5) In the beam-column subassembalages, the eccentricity does not have a influence on the ultimate strength and the shape of the hysteresis loop in the beam shear-story drift relationships. The ultimate strength of joint with eccentricity can be calculated by proposed equation for the ultimate joint shear strength without eccentricity and for predicting the ultimate strength of joint under combined torsion and shear.

REFERENCES

1. Fujii, S., Aoyama, H., and Umemura, H.. “Moment-Curvature Characteristics of Reinforced Concrete Members on the basis of Material Properties.” Summaries of Technical Papers of Annual Meeting, Architecutural Institute of Japan. 1972; pp.1261-1262.
2. Architectural Institute of Japan. “Data for Ultimate Strength Design of Reinforced Concrete Structures.” Architectural Institute of Japan, 1987.
3. Architectural Institute of Japan. “Design Guideline for Earthquake Resistant Reinforced Concrete Buildings Based on Ultimate Strength Concept.” Architectural Institute of Japan, 1998.
4. Architectural Institute of Japan. “Recommendation to RC Structural Design after Hanshin-Awaji Earthquake Disaster-Cause of particularly noticed damages and corresponding RC Structural design details.” Architectural Institute of Japan, 1998.