13th World Conference on Earthquake Engineering
Vancouver, B.C., Canada
August 1-6, 2004
Paper No. 339

APPLICATION OF LOW-YIELD STRENGTH STEEL IN STEEL BRIDGE PIERS

K. A. S. SUSANTHA[1], Tetsuhiko AOKI[2], Takushi KUMANO[3] and Katsuhiro YAMAMOTO[4]

SUMMARY

In this study, an attempt is made to investigate the use of low-yield-strength (LYS) steel for improving the ductility capacity of box-shaped steel bridge piers. The special characteristic of LYS steel is that it possesses significantly low yield strength but can gain ultimate strength of about two times of its yield strength at large strain levels. The advantage of use of LYS steel is that it can effectively use large plastic deformation in component plates. The failure of columns is concentrated at the LYS steel segment and the energy dissipation occurs far beyond the yield point. The required thickness of LYS plates is much higher than that of the normal steel plates and this can be expected to prevent the occurrence of early local buckling. To investigate the above facts an experimental work is carried out. Four specimens having different thickness and sectional configurations (i.e., with and without longitudinal stiffeners) are served for cyclic loading test. A base specimen that consists of only normal steel plates is tested for the comparison purposes. The test results reveal that the LYS steel portion with longitudinal stiffeners greatly improve the strength and ductility capacity of box columns. Also, it is observed that the LYS steel has a great cyclic strain-hardening characteristic.

INTRODUCTION

The most common mode of failure of steel columns in highway bridge systems subjected to strong ground motions is excessive lateral deformation due to local buckling of component plates. This was clearly evident during the famous 1995 Kobe earthquake. Subsequent to the Kobe earthquake, several modifications have been introduced to the Japanese seismic design code to improve the energy absorption capacity of structures. It has been proposed so far, as means of improving the ductility of bridge piers to fill concrete at bottom of the pier and to set diaphragms at short distance intervals than as usual. The concrete infilling is simple and effective but there are problems that inside concrete may prevent repair work after an earthquake, in addition to the increase of dead load on the foundation. The method of short distance diaphragm setting is also useful in preventing occurrence of early local buckling but there is another issue that normal steel material is incapable of following the large accumulated plastic strain due

[1] Research Staff, Aichi Institute of Technology, Toyota, Japan. Email: susantha@aitech.ac.jp
[2] Professor, Aichi Institute of Technology, Toyota, Japan. Email: aoki@aitech.ac.jp
[3] Struct. Engineer, Kawatetsu Kyoryo Tekkou Ltd., Tokyo, Japan. Email: kumano@kawatetsu-bs.co.jp
[4] Graduate Student, Aichi Institute of Technology, Toyota, Japan. Email: f03716@gs.aitech.ac.jp

to repeated earthquake force. The key characteristic of LYS steel is that it has almost twice the ductility of normal steel material although the yield point is half of that of normal steel. Therefore, LYS steel can bear a great amount of accumulated plastic strain as a big earthquake hit the structure. The LYS steel members have been already commonly used as energy absorbing members in building structures in Japan. For example, Hiroshima Green Building and Tokyo Takarazuka Building in Japan are equipped with LYS steel braces for reducing the response to earthquakes. The hysteretic dampers with the use of LYS steel have been investigated in Japan by Tamai et al. [1], Izumi et al. [2] and Nakashima et al. [3]. The LYS steel braces are proved to be very effective in absorbing the energy [4]. Nakashima et al. [5, 6] investigated the behavior of shear panels made of LYS steel.

In this study, the fundamental behavior of stiffened and unstiffened LYS steel plates located at the bottom of pier is investigated experimentally under the cyclic horizontal load with a constant axial load. Five specimens are tested under repeated horizontal loading. Among them, one is served to be the base specimen that consists of only normal steel plates. Thickness of plates and sectional configuration (i.e, stiffened or unstiffened section) are the main considerations in this study. The specimens are fabricated using normal steel grade SM490 (σ_y=490MPa) and LYS steel having yield strength of 100 MPa.

OUTLINE OF EXPERIMENT

Experimental Program

The experimental details presented in this paper are the first stage of series of planned tests that have to be performed. This initial test is planned to examine the fundamental earthquake resisting characteristics of steel columns partly fabricated with LYS plates. Therefore, first, two specimens with LYS steel are tested. Then another two specimens that were designed based on the results of first two specimens are tested. A specimen with normal steel is also tested for comparison purposes. A photograph of the test setup is shown in Fig. 1. As shown in this figure, axial load is applied using two servo controlled hydraulic actuators each having capacity of 4000 kN and maximum stroke of ±500 mm. The same type of actuator is used to apply the lateral load. The bottom end of the test specimen is bolted to a rigid base plate. Top end is attached to a loading-beam to which vertical and horizontal actuators are connected. So, the fixed and free boundary conditions are simulated at the footing and the top of the specimens, respectively. A vertical steel frame is attached to the base plate for supporting the displacement transducers. This arrangement avoids the effect of bending of the base plate on lateral displacement readings.

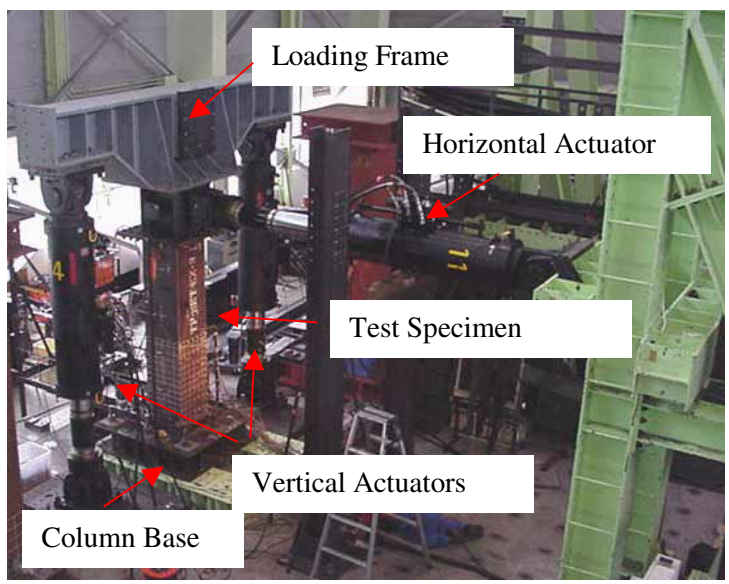

Fig. 1 Test Setup

Test Specimens

LYS steel specimens are prepared using already fabricated normal steel pier models with steel grade SM490 (i.e., nominal yield stress, σ_y=314 MPa). The height of these piers is 2420 mm and cross section consists of 450× 450× 6 mm square section as shown in Figs. 2(a) and (c). Each component plate has two ribs of size 6× 55 mm, of the same steel grade. These specimens were designed to have width to thickness ratio parameters R_R and R_F to be 0.52 and 0.34, respectively. Parameter R is given by

$$R_R, R_F = \frac{b}{t}\sqrt{\frac{12(1-\upsilon^2)\sigma_y}{\pi^2 kE}} \tag{1}$$

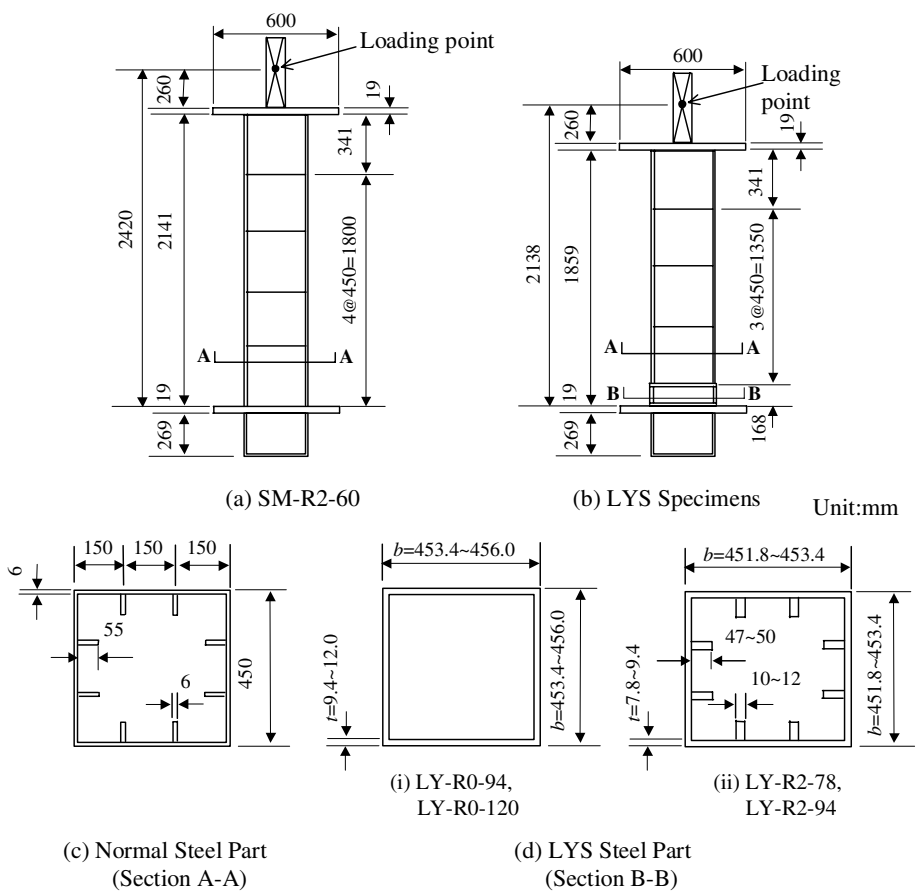

Fig. 2 Geometry of Test Specimens

where k=elastic buckling coefficient of plate in compression; b=flange breadth between inside faces of web; t=flange thickness of plate; σ_y=yield stress; E=modulus of elasticity; ν=Poisson's ratio, and subscripts $_R$ and $_F$ =local buckling between stiffeners and overall buckling of stiffened plate, respectively. The ratio of rigidity ratio γ to required minimum rigidity ratio γ^*, γ/γ^* [7] is 2.5. These steel columns were chosen from existing columns that have been subjected to cyclic loading test previously but experienced lesser buckling residual deformation. A length of 300 mm from the base of all model piers, which exhibited somewhat local residual deformation are cut out and removed, then 9 mm thick diaphragm is welded to the cut section. Stiffened or unstiffened box sections made out of LYS steel are

welded to this diaphragm. Another diaphragm with thickness 9 mm, which is to be connected to the base plate for testing, is welded to the other end of the LYS steel part, as shown in Fig. 3. The utilization of previously tested specimen as the upper part of LYS steel specimens are considered not to affect seriously on the results of this experiment since remaining part of the normal steel specimens after removing two third of the lowest panel did not have apparent out of plane deformations. The geometrical details of LYS steel specimens are shown in Figs. 2(b) and (d). The width of all LYS steel plates is determined to be 150 mm that is equal to the one third of the width of the pier (450 mm). Total height of LYS steel piers then becomes 2288 mm which is 132 mm less than the height of original normal steel pier.

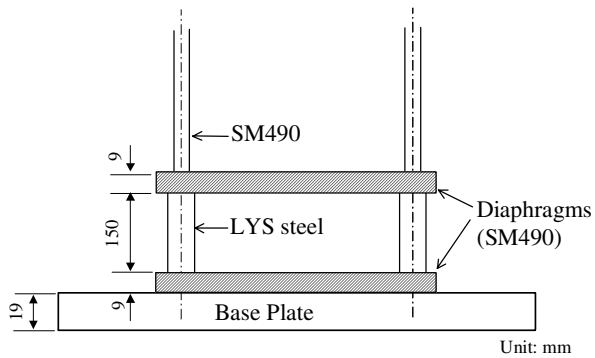

Fig. 3 Detail of LYS Steel Segment

Tensile Coupon Test

Coupon tests using three specimens made out of JIS 1A (Japanese Industrial Standards) steel are conducted to check the stress-strain characteristics of LYS steel. Average thickness of specimens is 12.3 mm. The results of these tests are shown in Fig. 4 together with the result of normal strength steel specimen of grade SM490. The average yield strength of LYS steel is about 97.9 MPa at 0.2% offset strain and tensile strength is about 271 MPa and Young's modulus obtained from the initial gradient of the stress-strain curve becomes 200 GPa. The elongation reaches as far as 38.5%. The values of yield stress (σ_y), ultimate strength (σ_u), and strain at the end of the coupon tests for both LYS steel and normal strength steel are listed in Table 1.

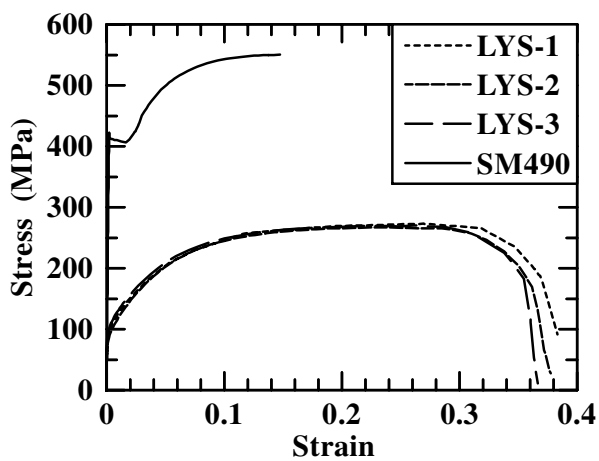

Fig. 4 Coupon Test Results of LYS Steel

Table 1 Coupon Test Results

Specimen	σ_y (MPa)	σ_u (MPa)	Strain at Failure (%)
LYS-1	95.4	274.0	39.6
LYS-2	86.8	267.0	38.0
LYS-2	102.1	271.0	37.9
SM490	425.0	550.0	over 17

Determination of the Cross Section of LYS Steel Plate

The thickness of stiffened and unstiffened LYS steel plate located at the bottom of the specimens is decided taking into account the stress-strain characteristics of LYS steel. It is clear from Fig. 4 that the yield stress of LYS steel is about 100 MPa and within a short strain range tensile strength reaches up to

about 271 MPa through strain hardening. The cyclic loading test of steel piers carried out for investigating seismic performance demands very large strain levels beyond the elastic limit and the plastic limit surface of LYS steel is known to expand largely by the cyclic loading than that of normal steel, hence, 0.2% yield stress level is no more recognized as the basis of the stress level like normal steel. As a result, usual yield strength (σ_y=425 MPa) for normal steel and the tensile strength (σ_{uL}=271 MPa) for LYS steel are used in this study. Then the thickness of LYS steel plate t_{LY} is decided by

$$t_{LY} = \frac{\sigma_{ySM}}{\sigma_{uL}} t_{SM} \tag{2}$$

where σ_{ySM}=yield stress of SM490 steel; σ_{uL}=tensile strength of LYS steel; and t_{SM} =thickness of normal steel plate. The stress ratio σ_{ySM}/σ_{uL} in these two steel types leads to 1.57 and the thickness of LYS steel plate is then equivalent to about 1.6 times that of normal steel.

Initially, two specimens, one without stiffeners (LY-R0-94) and another with stiffeners (LY-R2-94), were designed based on the above concept. In specimen designation, "LY" stands for low-yield steel, "R0" for without ribs and "R2" for two ribs. Figures 94 stands for LYS plate thickness of 9.4 mm. The member cross sectional areas of LY-R0-94 and LY-R2-94 are 165.6 cm^2 and 176 cm^2, respectively and these correspond to 1.25 and 1.32 times that of the normal steel section. Stress σ_b at the extremely compressed point of the column due to axial force and yield horizontal force becomes 249 MPa and 248 MPa, respectively. After testing these two specimens, another two specimens were designed based on the observed results of the first two. Due to the low ductility and strength observed in specimen LY-R0-94 as will be discussed in details in later section, a specimen with thickness of 12.0 mm (LY-R0-120) was prepared. The member cross sectional area of this specimen is 210 cm^2 which is 1.58 times that of normal steel section and the stress σ_b is 198 MPa. Specimen LY-R2-94 showed quite larger strength and very high ductility. Therefore another specimen that has smaller thickness than that of LY-R2-94, that is a specimen having thickness 7.8 mm (LY-R2-78) was finally designed. The cross sectional area of this member is 218 cm^2 which is 1.64 times that of the normal steel section. The stress σ_b of this specimen is 203 MPa.

Details of these specimens are listed in Table 2. As shown in the table, the R_F values are very small such as 0.10 to 0.16 which does not cause buckling up to yield strength in the case of normal steel plates. The rigidity ratio γ/γ^* of stiffened LYS steel plates are extremely large as far as 12.2 and 12.7 and plate bucking would never happened with normal steel plates with such large γ/γ^* values.

Table 2 Details of LYS steel Sections

Specimen	LY-R0-94	LY-R0-120	LY-R2-78	LY-R2-94
Plate thickness, t (mm)	9.4	12.0	7.8	9.4
No of ribs	0	0	2	2
Rib dimension (mm)	-	-	10×47	12×55
Cross sectional area (cm^2)	166	210	176	218
Stress at yield load H_y, σ_b (MPa)	249	198	248	203
σ_b/σ_{uL}	0.92	0.73	0.92	0.75
Width-thickness parameter R_F	0.158	0.155	0.117	0.095
Rigidity ratio γ/γ^*	-	-	12.2	12.7
σ_{uL}: ultimate strength of LYS steel plate (271 MPa)				

Loading Sequence

All the specimens are loaded with constant axial force P (P=864 kN) which is given by the 0.2 times the squash load P_y of normal steel column. The cyclic lateral loads are applied in terms of lateral displacements in which the amplitude is increased step-by-step as a multiple of yield displacement δ_y. The values of yield horizontal load H_y (=194 kN) and yield displacement δ_y (=10.0 mm) of the former normal steel column are used in LYS steel specimens as well. These values are obtained when strain gauges at the bottom of the pier shows the yield strain determined by the tensile test. The theoretical equations for H_y and δ_y are shown in Eqs. (3) and (4), respectively.

$$H_y = \frac{M_y}{h}\left(1 - \frac{P}{P_y}\right) \tag{3}$$

$$\delta_y = \frac{H_y h^3}{3EI} + \frac{H_y h}{GA_w} \tag{4}$$

where h=height of the column; I= moment of inertia; M_y=yield moment of the section; G=shear modulus; and A_w=cross sectional area of web. Since the measured yield stress indicated about 1.3 times higher than the nominal value, δ_y value obtained from the test becomes little smaller than the calculated value from Eq. (3) (δ_y=12.1 mm).

EXPERIMENTAL RESULTS AND DISCUSSIONS

Strength and Ductility

The lateral load-lateral displacement hysteretic curves obtained for the base specimen (SM-R2-60) and LYS steel specimens (LY series) are shown in Figs. 5 and 6, respectively. In Fig. 7, envelope curves of hysteretic curves of all the specimens are shown. The maximum load H_{max} and its ratio to that of base specimen SM-R2-60 (i.e., $H_{max,SM}$) are summarized in Table 3 together with the ductility ratio derived from envelope curves according to Eq. (5):

$$\mu = \frac{\delta_{95}}{\delta_y} \tag{5}$$

where δ_{95} is the displacement at the 95% of the maximum load beyond the peak. The ductility ratio nondimensionalized by the ductility ratio of SM-R2-60 (μ_{SM}) are also listed in Table 3. The results obtained from each specimen test are summarized as follows:

Table 3 Maximum Load and Ductility Ratios

Specimen	H_{max} (kN)	$H_{max}/H_{max,SM}$	μ	μ/μ_{SM}
SM-R2-60	308	1.00	5.03	1.00
LY-R0-94	201	0.62	2.34	0.46
LY-R0-120	339	1.12	4.42	0.88
LY-R2-78	301	1.02	5.04	1.00
LY-R2-94	409	1.38	12.00	2.38

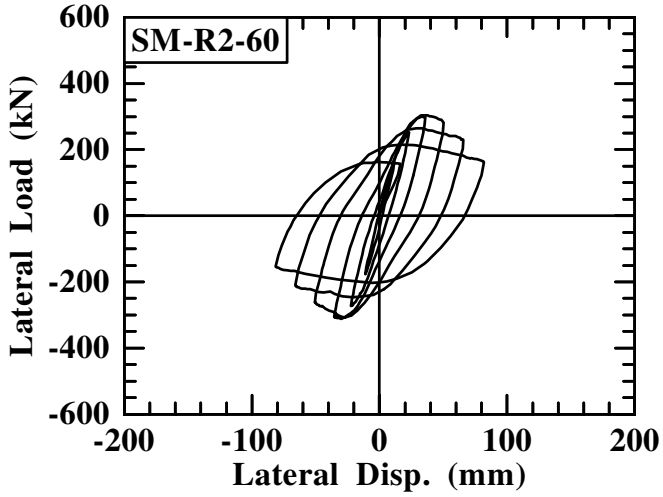

Fig. 5 Horizontal Load-Displacement Hysteretic Curve of Specimen SM-R2-60

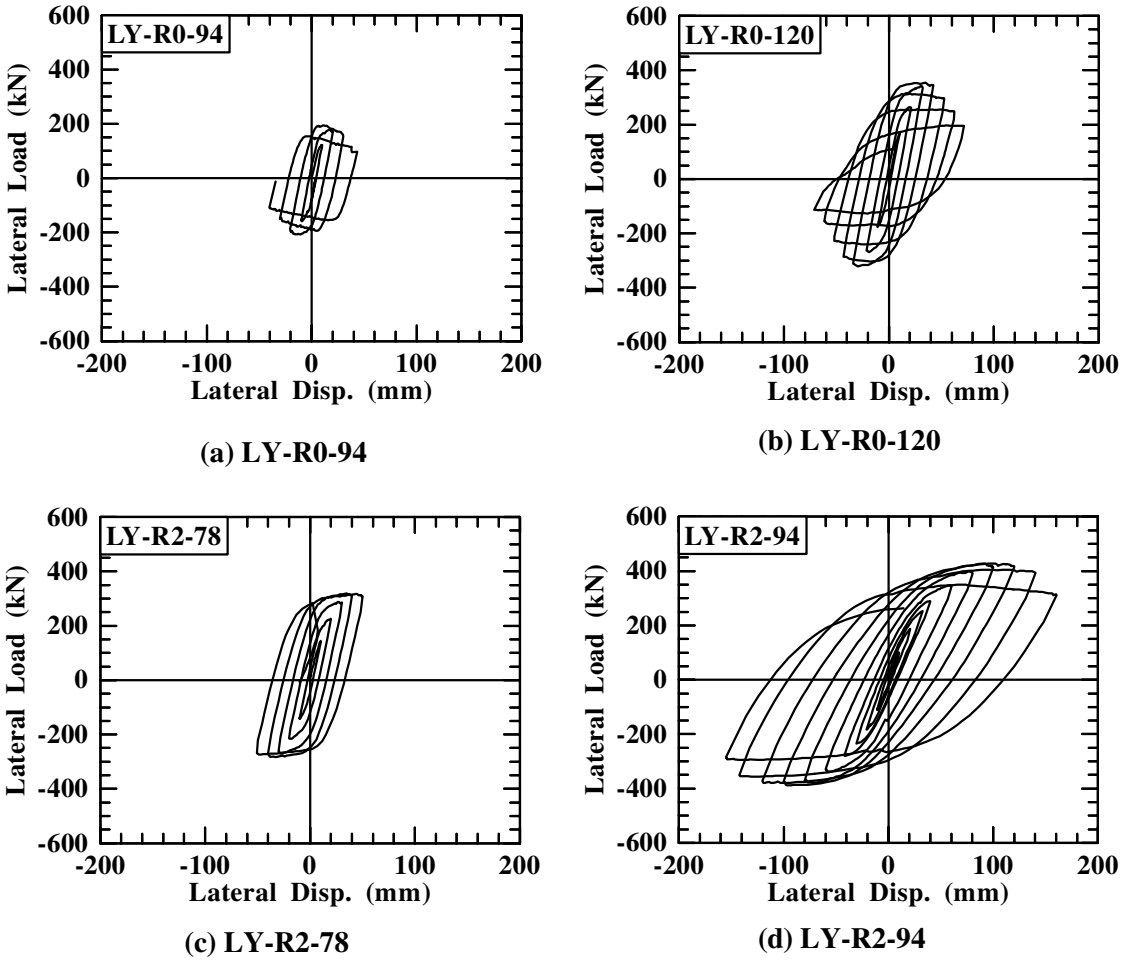

(a) LY-R0-94

(b) LY-R0-120

(c) LY-R2-78

(d) LY-R2-94

Fig. 6 Horizontal Load- Displacement Hysteretic Curves of LYS Steel Specimens

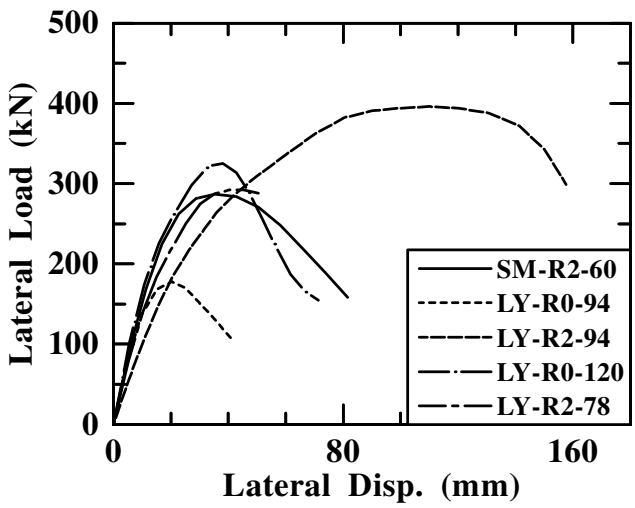

Fig. 7 Envelope Curves of Hysteretic Curves

a. Specimen LY-R0-94 (unstiffened, t=9.4 mm)

It is clear from the hysteretic curve in Fig. 6(a) and the envelope curve shown in Fig. 7 that the strength and ductility of specimen with unstiffened LYS plate with thickness 9.4 mm (i.e., LY-R0-94) are remarkably smaller than those of others. This indicates that there is no merit in using LYS plates in unstiffened section with thickness defined by Eq. (2). In the test, plate buckling initiated as early as displacement level of $2\delta_y$, and then the buckling deflection rapidly increased along with further loading. The convex deflection mode is observed in all LYS plates. The stress at the base of the pier at the yield horizontal force H_y reaches 92% of the maximum strength of LYS plate, where the tangent modulus of stress-strain curve of LYS steel becomes very small. Consequently, the buckling started quickly and grew fast.

b. LY-R0-12 (unstiffened t=12.0 mm)

In the case of specimen LY-R0-120 that is unstiffened but has thicker LYS plate (t=12 mm), the hysteretic curve in Fig. 6(b) and corresponding envelope curve in Fig. 7 indicates almost the same result as that of original normal steel pier model (SM-R2-60) but the maximum load increased 12% and ductility decreased 12%. Therefore, this case also does not represent the merit of employment of LYS plate. In this specimen, plate buckling initiated from $3\delta_y$ and grew notably. All the LYS plates showed convex buckling mode as similar to the early case. The distinct difference of buckling behavior of this one from that of normal steel specimen is that the deterioration of the load in the case of LYS plate is very small even after significant buckling deformation is recognized. Though the stress at the yield horizontal force is 73% of the maximum strength of LYS plate, good ductility performance could not be observed from this specimen. It is understood from these results that plate buckling commences from early stage of loading in the case of unstiffened LYS plate columns. In order to use the LYS plate efficiently up to the maximum stress level, estimation of the tangent modulus and introducing it properly into the buckling strength equation for LYS plate is essential.

c. LY-R2-78 (stiffened with two ribs, t=7.8mm)

Overall buckling could not be seen from the specimens with stiffened LYS plates. Specimen LY-R2-78 causes concave shaped local buckling between ribs from $3\delta_y$ and it developed gradually along with the increasing load. The maximum strength reaches almost the same value as that of normal steel pier model,

and the deformation goes well up to $5\delta_y$ without significant decrease of the load. But the loading test was terminated due to a sudden brittle fracture occurred along the transverse direction at the mid height of LYS steel panel at the beginning of $6\delta_y$. The ductility factor at the rupture is almost the same as that of original normal steel model. If brittle fracture has not occurred, ductility is supposed to increase around 10%. The reason for the sudden fracture is that large buckling deformation between ribs was affected by repeated loadings during the test, and then accumulated plastic strain had exceeded the limit value of the material. For the sake of preventing brittle fracture, more ribs are to be attached to prevent forming local buckling between ribs, and wider LYS plate than present dimension needs to be used. In addition, the maximum stress induced in this LYS plate leads to 92% of the maximum stress of LYS steel as similar to the specimen LY-R0-94. This is because the thickness of LYS steel plates in this specimen is somewhat smaller than that it should be.

d. LY-R2-94 (stiffened with two ribs, t=9.4mm)

The thickness of LYS plate of this specimen is 20% larger than that of former LY-R2-78. The local buckling initiates from $3\delta_y$ in this case also, but the observed local buckling deflection between ribs is smaller than before. The load-displacement behavior as seen in Fig. 6(d) and the envelope curve in Fig. 7, show the largest strength and ductility among four specimens. The maximum load reaches 1.4 times that of the base specimen with normal steel and it is about 2.4 times in the case of ductility. It is observed during the test that the maximum load at every loading cycle increases continuingly. But excessive increase of the maximum load may bring unexpected destruction at the outer parts of LYS plate, which is not desirable in seismic design. The maximum stress of this LYS plate is 75% of the maximum stress of LYS steel, that is 18% less than that of LY-R2-78 specimen. Therefore, it can be suggested that a slightly thinner LYS plate should be used to reduce the maximum strength.

Energy Absorption

Energy absorption calculated from the load-deflection hysteretic curves is exhibited in Fig. 8. The superior performance than the original specimen was observed only in the specimen LY-R2-94 which is stiffened by two ribs. If brittle fracture had not occurred, LY-R2-78 with two ribs may follow the same trend as LY-R2-94. In the early stage of loading, say around up to 4th cycle, the energy dissipations from the unstiffened specimens are nearly the same as that of normal steel specimen.

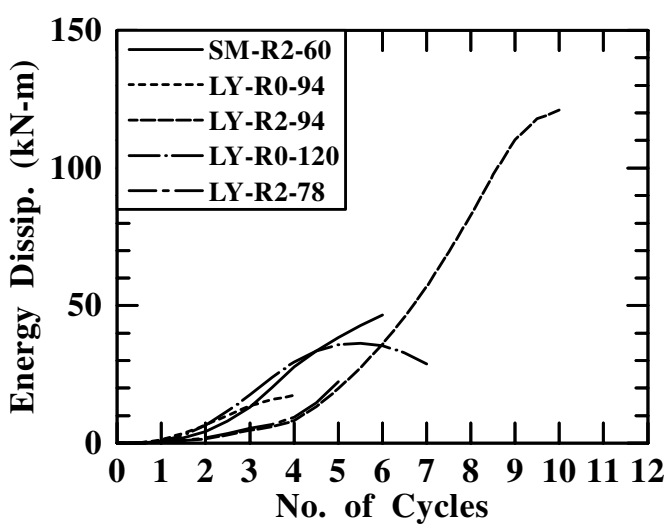

Fig. 8 Energy Absorption at each Cycle

Buckling Mode

The buckling modes of each LYS steel test specimen at the final stage of the test are shown in Fig. 9. It is evident from these photos that the magnitudes of deflection are extremely large compared to that of normal steel plate buckling but the degradation of load at these displacement level is comparatively small. This may be considered for the reason that the yield surface of the LYS steel expands more rapidly than normal steel under cyclic loading.

(a) LY-R0-94

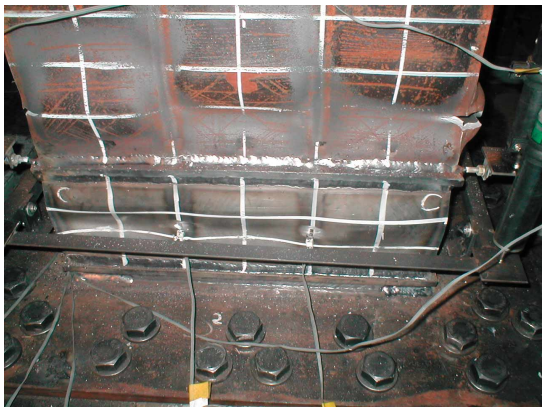

(b) LY-R2-94

(c) LY-R0-120

(d) LY-R2-78

Fig. 9 Deformed Shapes of Specimens at Final Stage of Test

Comprehensive Evaluation for the Seismic Performance of Steel Pier with LYS Steel Plate

There is possibility to improve the ductility of steel piers greatly by applying LYS plate to the base of them. In order to utilize the excellent ductility nature of the LYS steel at its utmost, it is necessary to generate stress up to the maximum stress of the material. Because tangent modulus of stress-strain diagram near the maximum stress of LYS steel is very small, buckling occurs easily. Therefore, unstiffened specimen series experienced early overall buckling and have not enough ductility even in the specimen with thicker LYS plate (LY-R0-120). It may be suggested that ribs have to be introduced to the unstiffened LYS plate.

For the stiffened LYS plate case, though overall buckling can not be found, local buckling between ribs initiates from displacement levels of 2 or $3\delta_y$ and the large deformation grows rapidly in the specimen with thin LYS plate, following brittle fracture at the center of the plate just before $6\delta_y$. In order to prevent the rupture, the amount of local buckling deformation needs to be limited. Although the specimen LY-R2-94, which is 20% thicker than the other LYS plate specimens, shows smaller local buckling deformation and the ductility becomes large enough, but the maximum load leads to 38% greater than that of the original normal steel pier. This should be avoided because unexpected failure may occur not at LYS plate but at other parts of the column.

Another means to improve these shortcomings is to use wider LYS plate. For a simple consideration, twice of width of LYS plate generates a half amount of strain under the same top displacement of the pier, which makes it difficult to occur brittle.

CONCLUSIONS

This study is performed in the purpose of investigating experimentally the basic behavior and seismic resistance performance of the steel piers with the low-yield-strength (LYS) plate at its base. The test specimens is composed of 450×450 mm square box section with normal steel (SM490) at upper part and LYS plates with 150 mm width at the base. Four test specimens having different thickness and sectional configurations (i.e., with and without ribs) are served for cyclic loading test. Major findings of this study are summarized as follows:

1. The specimens with unstiffened LYS plates cause distinguished large plate buckling deformation at four LYS plates at base. Although the case with thick LYS plate shows enough strength, ductility is insufficient. Ribs should be provided to avoid the overall buckling.
2. Overall buckling is not observed in both specimens with stiffened LYS plates. But the specimen with thinner plate (t=7.8 mm) causes very large local buckling deformation between ribs and followed a sudden brittle fracture at the center height of LYS flange plate at 6th loading cycle. This kind of large local buckling deformation should be averted.
3. The specimen with 20% thicker stiffened LYS plates (t=9.4 mm) than the other reveals great ductility. But the same time the maximum strength goes up 1.4 times that of the original normal steel pier model. In the case of two ribs on the LYS plate, both the maximum strength and the ductility of the pier are sensitive to the change of LYS plate thickness.
4. In order to prevent brittle fracture and to suppress excessive increase of strength, enough width of the LYS plate is essential. Half or two third of pier width is recommended for LYS plate width.
5. When the characteristics of LYS steel is utilized extremely up to tensile strength, tangent modulus of the LYS steel becomes quite small and width-thickness parameter leads to large, consequently the buckling strength goes down. The suitable equation expressing buckling strength of LYS plate is required.
6. LYS steel has a great cyclic strain-hardening characteristic. The increase of the member strength by this can be cancelled by the local buckling deformation. In this case, attention needs to be paid on the limitation of accumulated plastic strain at the peak or valley of the local buckling deformation, otherwise brittle fracture may be possible to occur.

ACKNOLEDEMENT

This experiment was carried out at SEIsmic Resistance EXperiment center (SEIREX) at Aichi Institute of Technology (AIT), Japan. The writers wish to thank the members of structural mechanics laboratory of AIT for their assistance in carrying out the experiment.

REFERENCES

1. Tamai H, et al. "On hysteretic damper using low-yield stress plate installed in K-braced frame, part 1 and 2." Proceeding of annual Meeting of the Architectural Institute of Japan, Tokyo, Japan, 1991: 1447-1450 (in Japanese).
2. Izumi M, et al. "Low cycle fatigue test on shear yielding type low-yield stress steel hysteretic damper for response control, part 1 and 2." Proceeding of annual Meeting of the Architectural Institute of Japan, Tokyo, Japan, 1992: 1333-1336 (in Japanese).
3. Nakashima M, et al. "Energy dissipation behavior of shear panel made of low-yield steel." International Journal of Earthquake Engineering and Structural Dynamics, 1994, 23(12), 1299-1313.
4. Takaku T, Fukumoto Y, Okamoto T, Morishita Y. "Seismic design of steel piers using low yield strength steel for internal multi-cell panels." Seismic Resistance Design Manual of Steel Bridge Piers, Japan Bridge Construction Association, 1998: 360-374.
5. Nakashima M. "Strain-hardening behavior of shear panels made of low yield steel, I: Test." Journal of Structural Engineering, ASCE, 1995, 121(12), 1742-1749.
6. Nakashima M, Akazawa T, Tsuji B. "Strain-hardening behavior of shear panels made of low yield steel, II: Model." Journal of Structural Engineering, ASCE, 1995, 121(12), 1750-1757.
7. Chen WF, Duan L. "Bridge Engineering Handbook, CRC Press, Boca Raton, FL., 2000.