13th World Conference on Earthquake Engineering
Vancouver, B.C., Canada
August 1-6, 2004
Paper No. 3036

ANALYSES OF REINFORCED CONCRETE WALL-FRAME STRUCTURAL SYSTEMS CONSIDERING SHEAR SOFTENING OF SHEAR WALL

Yasushi SANADA[1], Toshimi KABEYASAWA[2] and Yoshiaki NAKANO[3]

SUMMARY

Seismic performances of reinforced concrete wall-frame structural systems were investigated through a shaking table test and three-dimensional nonlinear frame analyses. A reinforced concrete wall-frame building with soft first story was designed as a prototype structure for this study. A one-third scaled model of the prototype structure was tested on the Large-scale Earthquake Simulator, NIED, Japan. The testing methods and major findings were reported herein. The three-dimensional nonlinear dynamic analysis of the test structure was conducted using a four-node isoparametric element model, which was based on the two-dimensional constitutive law for reinforced concrete panel elements, in order to verify its reliability. This analytical model could simulate the displacement concentration, the shear failure of shear wall and the story yielding in the soft first story of the test structure, which was due to the shear softening of shear wall. Moreover, the effects of the shear softening of shear wall on responses of fifteen wall-frame buildings with different number of stories and different column and wall sections, which included regular buildings as well as vertically irregular ones, were investigated through three-dimensional nonlinear pushover analyses.

INTRODUCTION

It has been pointed out through major earthquake disasters, such as the 1994 Northridge Earthquake, the 1995 Hyogo-ken-nanbu Earthquake, the 1999 Taiwan Chi-chi Earthquake, etc., that vertically irregular buildings with soft first story were undesirable structures, because the ratios of severe damages were apparently higher in these buildings than in other regular buildings as shown in references EERI [1], AIJ [2] and EERI [3]. On the other hand, there is a great demand for buildings with soft first story in large cities with high population and building densities. The reason why is that they are very useful to plan wide spaces for car parks, stores, public areas and so on in the lower stories. Therefore, the response characteristics of this type of buildings have been investigated analytically, e.g. Chopra [4] and Yoshimura [5], and experimentally, e. g. Negro [6] and Kuramoto [7]. However, any practical and rational seismic design methods for these buildings have not been developed yet.

[1] Research Associate, Earthquake Research Institute, University of Tokyo, Japan. Email: ysanada@eri.u-tokyo.ac.jp
[2] Professor, Earthquake Research Institute, University of Tokyo, Japan. Email: kabe@eri.u-tokyo.ac.jp
[3] Associate Professor, Institute of Industrial Science, University of Tokyo, Japan. Email: iisnak@iis.u-tokyo.ac.jp

A research project on reinforced concrete buildings with soft first story has been carried out since 1999 in Japan. The objective of the project is to develop a practical seismic design procedure for this type of buildings. As a part of the project, a reinforced concrete wall-frame building with soft first story was designed as a prototype structure to investigate response characteristics of vertically irregular wall-frame systems. In this study, seismic performances of fifteen wall-frame buildings including the prototype structure were discussed experimentally and analytically.

A one-third scaled model of the prototype structure was tested on the Large-scale Earthquake Simulator, National Research Institute for Earth Science and Disaster Prevention (NIED), Japan. The testing methods and major findings were reported herein. The three-dimensional nonlinear dynamic analysis of the test structure was conducted using a four-node isoparametric element model, which was based on the two-dimensional constitutive law for reinforced concrete panel elements, in order to verify its reliability. This analytical model could simulate the displacement concentration, the shear failure of shear wall and the story yielding in the soft first story of the test structure, which was due to the shear softening of shear wall. Moreover, the effects of the shear softening of shear wall on responses of fifteen wall-frame buildings with different number of stories and different column and wall sections, which included regular buildings as well as vertically irregular ones, were investigated through three-dimensional nonlinear pushover analyses.

DESIGN OF RC WALL-FRAME SYSTEMS

Prototype Structure

A 6-story and 6x1-span reinforced concrete wall-frame building was designed as a prototype structure for this study. The prototype structure was planed as a vertically irregular wall-frame system with soft first story, based on a structure designed in reference Kuramoto [7]. Figure 1 shows the member arrangements and elevations of the prototype structure. The details of the column and wall sections of the prototype structure are shown in Table 1. The prototype structure was designed considering the three-dimensional effects so that the shear walls in the first story would not fail in shear before the structure formed the overall yield mechanism. The weight per floor area was assumed to be 11.8kN/m^2, the compressive strength of concrete was 23.5Mpa and the tensile strength of steel was 343.2Mpa.

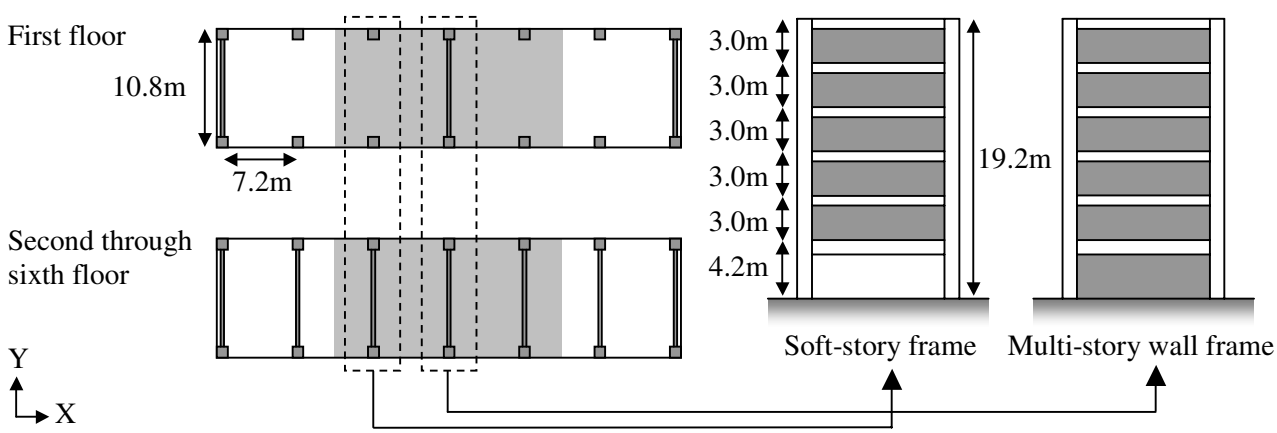

Figure 1 Plans and elevations of the prototype structure

Table 1 Details of the column and wall sections of the prototype structure

Column	XxY	Main rebars along X-axis	Main rebars along Y-axis
1st through 6th story	800x700	4-D25	2-D25, 2-D16

Wall	Thickness	Vertical rebars	Horizontal rebars
2nd through 6th story	150	D10@150 single	D10@150 single
1st story	300	D10@175 double	D10@75 double

Beam in X-direction	BxD	Top rebars	Bottom rebars
5th through roof floor	450x750	6-D25	4-D25
3rd and 4th floor	500x800	7-D25	5-D25
2nd floor	550x950	8-D25	6-D25

Beam in Y-direction		BxD	Top rebars	Bottom rebars
3rd through roof floor		300x650	3-D25	3-D25
2nd floor	Multi-story wall frame	550x950	3-D25	3-D25
	Soft-story frame	550x950	8-D25	8-D25

Scaled Model for Shaking Table Test

A test structure was a one-third scaled model representing the interior three-span of the prototype structure as shown with shade in Figure 1. Figure 2 and 3 show the plans and elevations of the test structure. The test setup on the shaking table is shown in Photo 1. Because the scale of this structure is one-third, additional weight must be installed to conform to the averaged axial stress level of the prototype structure. The mass of the scaled model above the first floor should be 1.83MN to attain the target calculated based on the prototype structure, whereas the mass of this model itself is 0.49MN. Therefore, the mass of the additional weight should be 1.34MN. However, the available weight was 0.63MN and the total mass above the first floor was 1.12MN, which was 0.61 times the target mass. The mass of the foundation was 0.27MN, and the total mass of the test structure on the shaking table was 1.39MN.

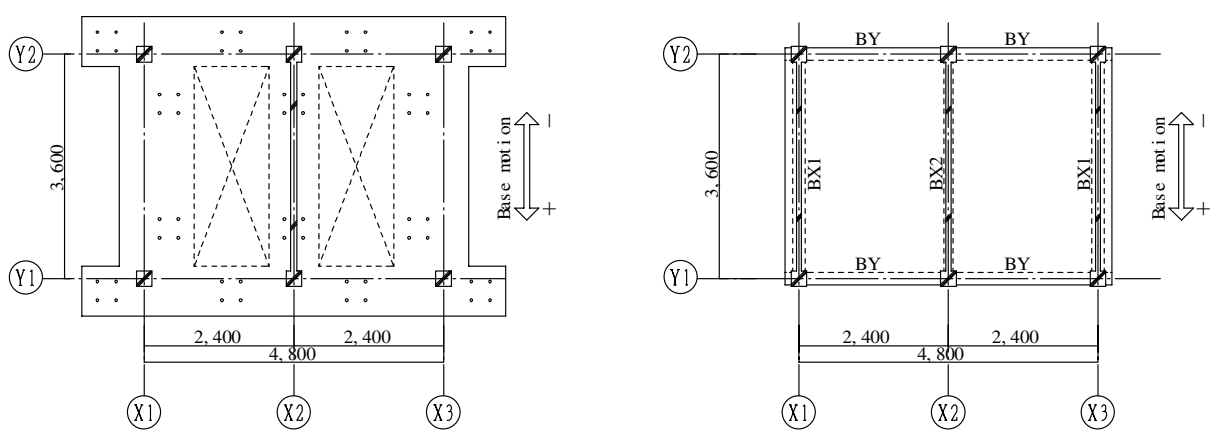

First floor **Second through sixth floor**

Figure 2 Plans of the test structure

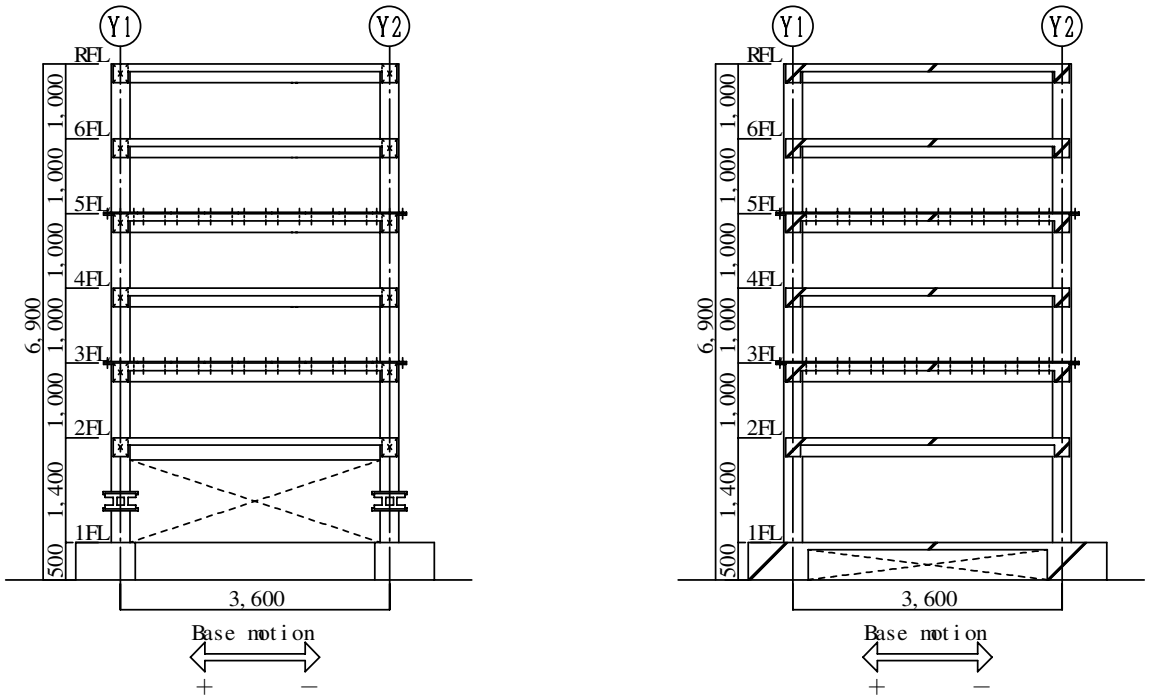

Exterior (soft-story) frame **Interior (multi-story wall) frame**

Figure 3 Elevations of the test structure

Photo 1 Test setup

Buildings for Parametric Analyses

To investigate seismic performances of wall-frame systems including regular and vertically irregular ones, fifteen wall-frame buildings were designed considering following parameters: (1) number of stories, (2) column sectional area in the first story, and (3) wall thickness in the first story. Table 2 shows the list of assumed parameters and analytical buildings.

(1) Number of stories: Three basic buildings with different number of stories as 6, 10, and 14 (B-series) were designed based on the same concept as the prototype structure. The 6-story basic building (6B) is identical to the prototype structure.

(2) Column sectional area: Two buildings with different column sectional areas in the first story (C-series) were designed for each basic building. The column sectional areas of C-series were conducted to be 1.5 and 2.0 times that of each basic building. However, the ratios of main rebars in the columns were equivalent to that of each basic building. Therefore, the strength in the first story was larger in case of the building with larger column sectional area.

(3) Wall thickness: Two buildings with different wall thicknesses in the first story (W-series) were also designed for each basic building. The wall thicknesses of W-series were 1.5 and 0.5 times that of each basic building, whereas the ratios of vertical and horizontal rebars in the walls were equivalent to that of each basic building. 6W1.5 and 14W1.5, which were strengthened the shear walls in the first story, were regarded as regular buildings, because the wall ratios on the first floor of these buildings were equivalent to or larger than those on the upper floors.

Table 2 Buildings for parametric analyses

		Basic (B-series)	(2) Column sectional area (C-series)		(3) Wall thickness (W-series)	
			1.5 times	2.0 times	0.5 times	1.5 times
(1) Number of stories	6-story	6B	6C1.5	6C2.0	6W0.5	6W1.5
	10-story	10B	10C1.5	10C2.0	10W0.5	10W1.5
	14-story	14B	14C1.5	14C2.0	14W0.5	14W1.5

Assumed parameters

SHAKING TABLE TEST

Test Methods

A shaking table test was carried out using the Large-scale Earthquake Simulator, National Research Institute for Earth Science and Disaster Prevention (NIED) at Tsukuba, Japan, in July 2000. The test structure was the one-third scaled reinforced concrete wall-frame structural model described above. Because the mass of the test structure was 0.61 times the target mass, the time axis for earthquake ground motion was multiplied by a factor of $\sqrt{0.61}/\sqrt{3}=0.45$ and the acceleration was multiplied by a factor of $1/0.61=1.64$ in order to realize the equivalent dynamic behavior such as the fundamental period and the yield strength associated with the available weight. The list of input acceleration records under the similitude law is shown in Table 3. Because the required levels of the input acceleration and velocity were relatively high up to the maximum capacity of the shaking table, the reproduced acceleration waveforms were not accurately identical to those of the original earthquake motions. Especially, the full length of the earthquake motion input could not be supplied in the latter part of TAK135, because the emergency brake mechanism of the shaking table operated towards the end of the main shock. However, the response spectra with 5% damping can be reproduced with satisfactory accuracy, examples of which are compared with those of the original records in Figure 4. The tests were continued from TAK75 until the near collapse of the test structure, although the results are not discussed in this paper.

Table 3 Input acceleration records

Input	Record	$_eV_{max}$	A_{max}	V_{max}	Amp	Amp_{in}	A_{in}	V_{in}	$_eA'_{max}$	$_eV'_{max}$
TOH12.5	TOH	12.5	258.2	40.9	0.3	0.3/0.61	127.0	9.1	77.5	12.3
TOH25	TOH	25	258.2	40.9	0.6	0.6/0.61	254.0	18.1	154.9	24.5
ELC37.5	ELC	37.5	341.7	34.8	1.1	1.1/0.61	616.2	28.3	375.9	38.3
ELC50	ELC	50	341.7	34.8	1.4	1.4/0.61	784.2	36.0	478.4	48.7
ELC75	ELC	75	341.7	34.8	2.2	2.2/0.61	1232.4	56.6	751.7	76.6
TOH75	TOH	75	258.2	40.9	1.8	1.8/0.61	761.9	54.4	464.8	73.6
JMA75	JMA	75	820.6	85.4	0.9	0.9/0.61	1210.7	56.8	738.5	76.9
TAK135	TAK	135	605.5	124.2	1.1	1.1/0.61	1091.9	101.0	666.1	136.6
TAK75	TAK	75	605.5	124.2	0.6	0.6/0.61	595.6	55.1	363.3	74.5
TAK100	TAK	100	605.5	124.2	0.8	0.8/0.61	794.1	73.5	484.4	99.4
TAK125	TAK	125	605.5	124.2	1.0	1.0/0.61	992.6	91.8	605.5	124.2

Notes on Table
Units: acceleration in gal (cm/sec./sec.) and velocity in kine (cm/sec.)
TOH: Tohoku University record (NS) during the 1978 Miyagi-ken-oki Earthquake
ELC: El Centro record (NS) during the 1940 Imperial Valley Earthqauke
JMA: JMA Kobe record (NS) during the 1995 Hyogo-ken-nanbu Earthquake
TAK: JR Takatori record (NS) during the 1995 Hyogo-ken-nanbu Earthquake in reference Nakamura [8]
$_eV_{max}$: intended approximate maximum velocity equivalent to the prototype structure
A_{max} and V_{max}: maximum acceleration and velocity of the original record
Amp: selected amplitude for the original record to the prototype structure
Amp_{in} (=Amp/0.61): modified amplitude considering the scaling of the weight
A_{in} (=A_{max}*Amp_{in}): maximum acceleration input to the scaled model on the shaking table
V_{in} (=V_{max}*Amp_{in}*(√0.61/√3)): maximum velocity input to the scaled model on the shaking table
$_eA'_{max}$ (=A_{max}*Amp=A_{in}*0.61): calculated maximum acceleration equivalent to the prototype structure
$_eV'_{max}$ (=V_{max}*Amp=V_{in}*(√0.61*√3)): calculated maximum velocity equivalent to the prototype structure

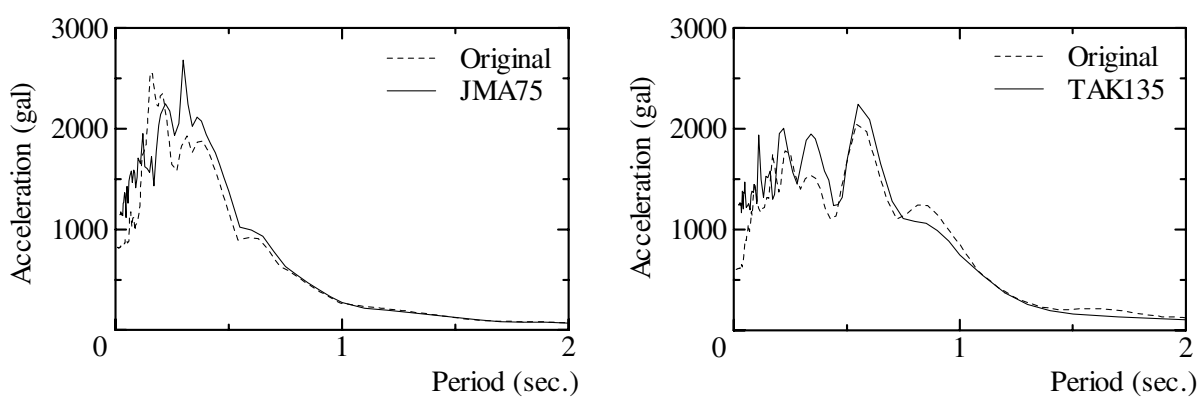

Figure 4 Comparison of response spectra for the original and the input records with time-scale factor of 0.45 and amplification factor of 0.9 for JMA and 1.1 for TAK

Test Results

The collapse process of the test structure is outlined below.

[TOH12.5]

No cracks were observed. The fundamental frequency of the test structure after this input did not change from 11.2Hz before the test. Hereafter, the fundamental frequency refers to that identified after each test and the time refers to the cumulative time counted from the start of this first input. Each test was recorded for 10 sec.

[TOH25]

Minor flexural cracks occurred at the upper end of the first-story column at X1-Y1 coordinate in Figure 2. The fundamental frequency reduced to 10.8Hz.

[ELC37.5]

Minor flexural cracks were observed at the upper end of the first-story column (X1-Y2). The fundamental frequency reduced to 10.7Hz.

[ELC50]

Flexural cracks were observed at the lower end of the beam in the second floor of the exterior soft-story frame along X1-axis. The fundamental frequency reduced to 10.3Hz.

[ELC75]

The main rebars on the tensile side at the top and base of the first-story column (X3-Y2) yielded at 40.8sec. The main rebars at the base of the boundary column (X2-Y2) yielded as well as the vertical rebars in the wall panel. The main rebars on the tensile side at the top and base of the first-story column (X3-Y1) and the main rebars at the base of the boundary column (X2-Y1) yielded at 40.9sec. Shear cracks occurred in the first- and second-story walls of the interior frame. Crack widths were less than 0.1mm at the end of the test. The fundamental frequency reduced to 9.7Hz.

[TOH75]

Shear cracks increased in the first- and second-story walls. The maximum crack width after the test was 0.5mm, whereas most of them were less than 0.2mm. The fundamental frequency was 9.5Hz.

[JMA75]

The test structure formed an overall yield mechanism due to flexural yielding of the wall base and the column bases on the compressive side and axial yielding of the tensile columns, as shown in Figure 5(a), at 61.7sec. Many horizontal cracks were observed in the exterior and boundary columns. The fundamental frequency was 7.4Hz.

[TAK135]

Shear cracks ran horizontally across the first-story shear wall at the height of around 30cm from the base. The system mechanism changed into the story yield mechanism with shear slip failure in the wall and flexural yielding at the top and base of the columns in the first story, as shown in Figure 5(b). Crashing off of the concrete was observed in the first-story wall as well as wide and dense cracks. The fundamental frequency was 2.6Hz.

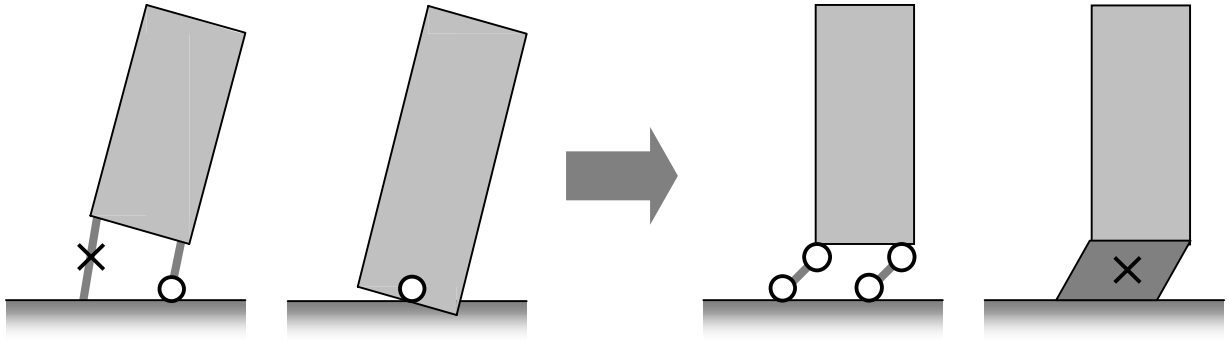

(a) Overall yield mechanism **(b) Story yield mechanism**

Figure 5 Change of the system mechanism

ANALYTICAL MODELS

Column Model

A fiber model based on material properties of concrete and steel was used for column members to consider interactions between flexural moment and axial force. The flexibility distributions for bending and axial deformation were assumed to be parabolic from column ends to its inflection point. The fiber slices at column ends consisted of steel elements and five concrete elements divided along its depth. The hysteresis models of stress-strain relationships for concrete and steel elements are illustrated in Figure 6 and 7, respectively. The Baushinger's effect is considered in the steel model. The details of the fiber model were described with the verification of accuracy in reference Kabeyasawa [9].

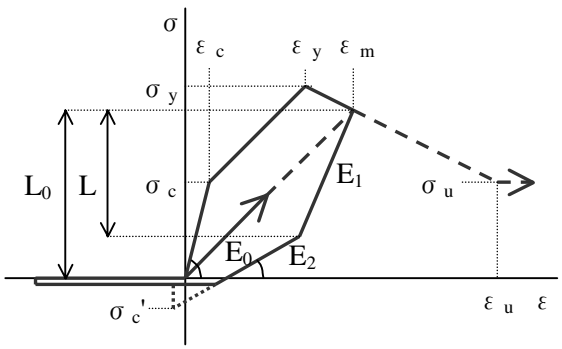

$L = 3/4 \times L_0$, $E_1 = E_0 \times (\varepsilon_y / \varepsilon_m)^{1/2}$, $E_2 = E_1 / 4$

Figure 6 Hysteresis model for concrete in the fiber model

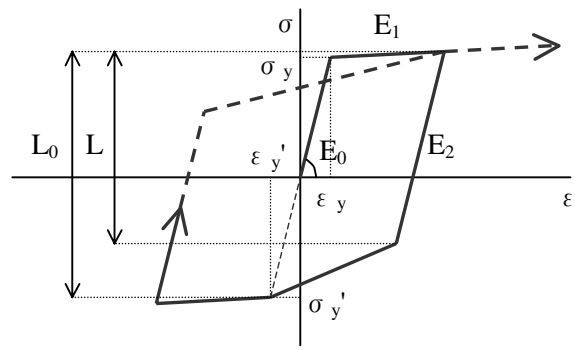

$L = 0.75 \times L_0$, $E_1 = 0.01 \times E_0$, $E_2 = E_0$

Figure 7 Hysteresis model for steel

Shear Wall Model

A four-node isoparametric element model, which was proposed in reference Chen [10], was used for shear walls in this study. The shear softening of shear wall can be considered rationally because this model is based on the two-dimensional constitutive law for reinforced concrete panel elements. Figure 8 shows this shear wall model. Nine integration points were assumed in the panel element for evaluating the stress-strain relationships of materials. The upper and lower beams of the model were assumed to be rigid in flexure, but flexible in axial defromation. The stress-strain relationship of concrete on the compressive side in the panel element is illustrated in Figure 9. In this study, the stress-strain relationship of concrete until the compressive strength were defined by Equation (1) and the degradations of stiffness and strength of concrete due to orthogonal tensile strain were evaluated by Equation (2) based on reference Vecchio [11].

$$\sigma_c = \beta \sigma_{c0} \{2(\varepsilon_c / \varepsilon_{c0}) - (\varepsilon_c / \varepsilon_{c0})^2\} \quad (1)$$

$$\beta = 1.0 / \{0.8 - 0.34(\varepsilon_t / \varepsilon_{c0})\} \quad (2)$$

where, σ_c: compressive stress, β : strength reduction factor, σ_{c0}: uniaxial compressive strength, ε_c: compressive strain, ε_{c0}: strain at compressive strength, ε_t: orthogonal tensile strain.

The stress-strain relationship of concrete used in the boundary columns and the upper and lower beams was the same model used in the column model, as shown in Figure 6. The stress-strain relationship of steel in the panel, the boundary columns and the beams was the model illustrated in Figure 7.

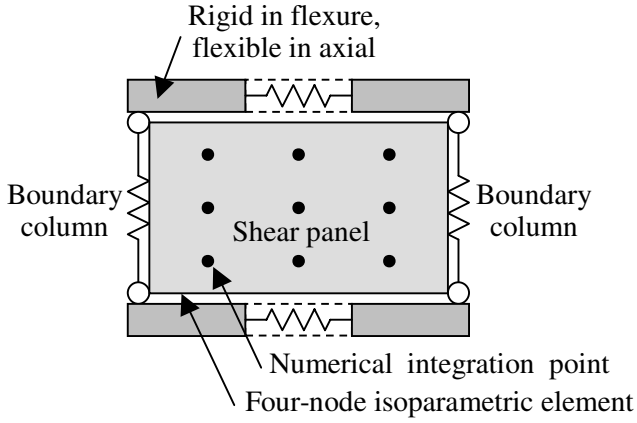

Figure 8 Shear wall model

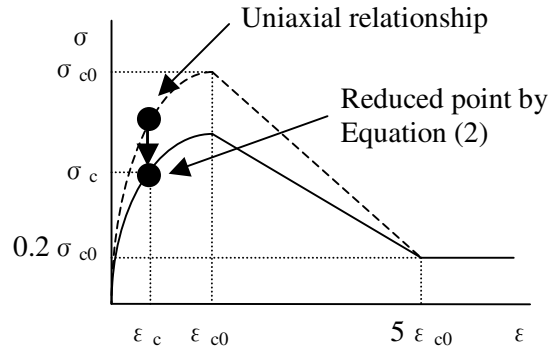

Figure 9 Stress-strain relationship of concrete in the panel element

THREE-DIMENSIONAL NONLINEAR ANALYSIS

Analytical Methods

A three-dimensional nonlinear frame analysis of the test structure of the shaking table test was conducted using the fiber model for the columns and the four-node isoparametric element model for the shear walls and slabs. The transverse beams connecting the exterior frames and the interior frame were also modeled to consider the vertical forces transferred between them. The mass of the test structure was distributed among each node in proportion to its tributary floor area. The input acceleration records used in this analysis, which were recorded on the foundation of the test structure during the test, are shown in Table 4. The analysis under lower levels of accelerations prior to ELC50 is not presented here, for the structure responded elastically. The average acceleration method was used for the integration of the equation of motion with time interval of 0.01sec., which was identical to that of data sampling in the test.

Table 4 Acceleration records observed on the shaking table

Input	Original record	Intended peak ground velocity	Recorded peak ground acceleration	Recorded peak ground velocity	Converted peak ground acceleration	Converted peak ground velocity
ELC50	ELC	50	924.7	40.6	564.1	54.9
ELC75	ELC	75	1326.3	53.9	809.0	72.9
TOH75	TOH	75	1223.5	67.9	746.3	91.9
JMA75	JMA	75	1610.7	62.8	982.5	85.0
TAK135	TAK	135	2175.8	107.2	1327.2	145.0

Notes on table
Units: acceleration in gal (cm/sec./sec.) and velocity in kine (cm/sec.)
ELC: El Centro record (NS) during the 1940 Imperial Valley Earthquake
TOH: Tohoku University record (NS) during the 1978 Miyagi-ken-oki Earthquake
JMA: JMA Kobe record (NS) during the 1995 Hyogo-ken-nanbu Earthquake
TAK: JR Takatori record (NS) during the 1995 Hyogo-ken-nanbu Earthquake in reference Nakamura [8]
Intended and converted peak ground accelerations and velocities are equivalent to the prototype structure
Recorded peak ground velocities are calculated based on reference Watabe [12]

Verification of Analytical Models

The observed and calculated waveforms of the overall drift under ELC50 are shown in Figure 10. The instantaneous stiffness proportional damping ratio was assumed in the analysis to be 0.7%, which was identified from the test results under low level of white noise. However, the calculated responses were apparently higher than the observed ones, which means that the damping ratio in the model was underestimated. Therefore, the other analysis shown below was carried out with the damping ratio of 3%.

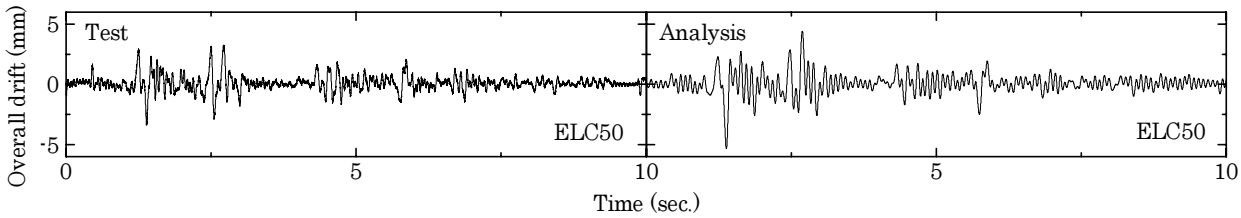

Figure 10 Overall drift from the analysis with damping ratio of 0.7%

The observed and calculated waveforms of the overall and 2nd floor drifts in the interior frame were compared in Figure 11 and 12. A fair correlation was observed between the test and analytical results. However, the large residual deformation at the rooftop level was calculated in the analysis after the shear wall in the first story failed in shear during TAK135, which was not observed in the test. This was due to inadequate modeling on the hysteresis rules of concrete, especially the rules after compressive crushing.

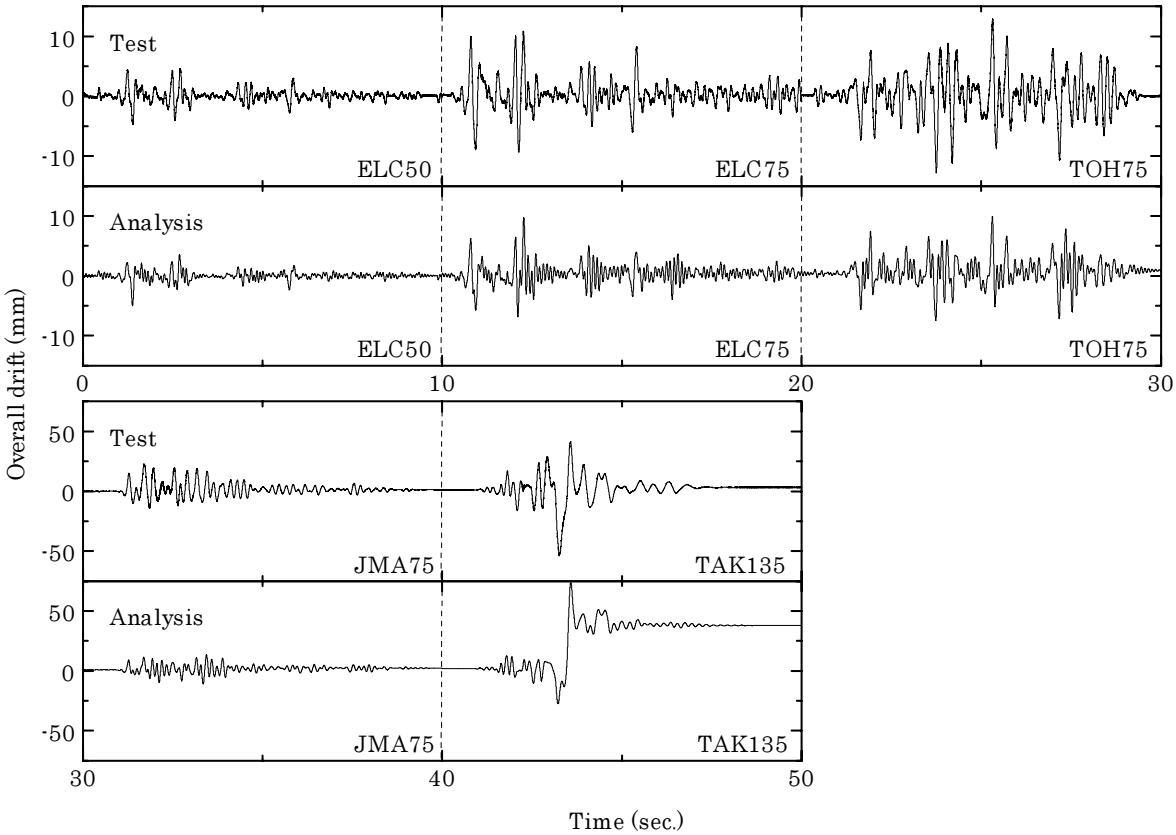

Figure 11 Observed and calculated waveforms of overall displacement

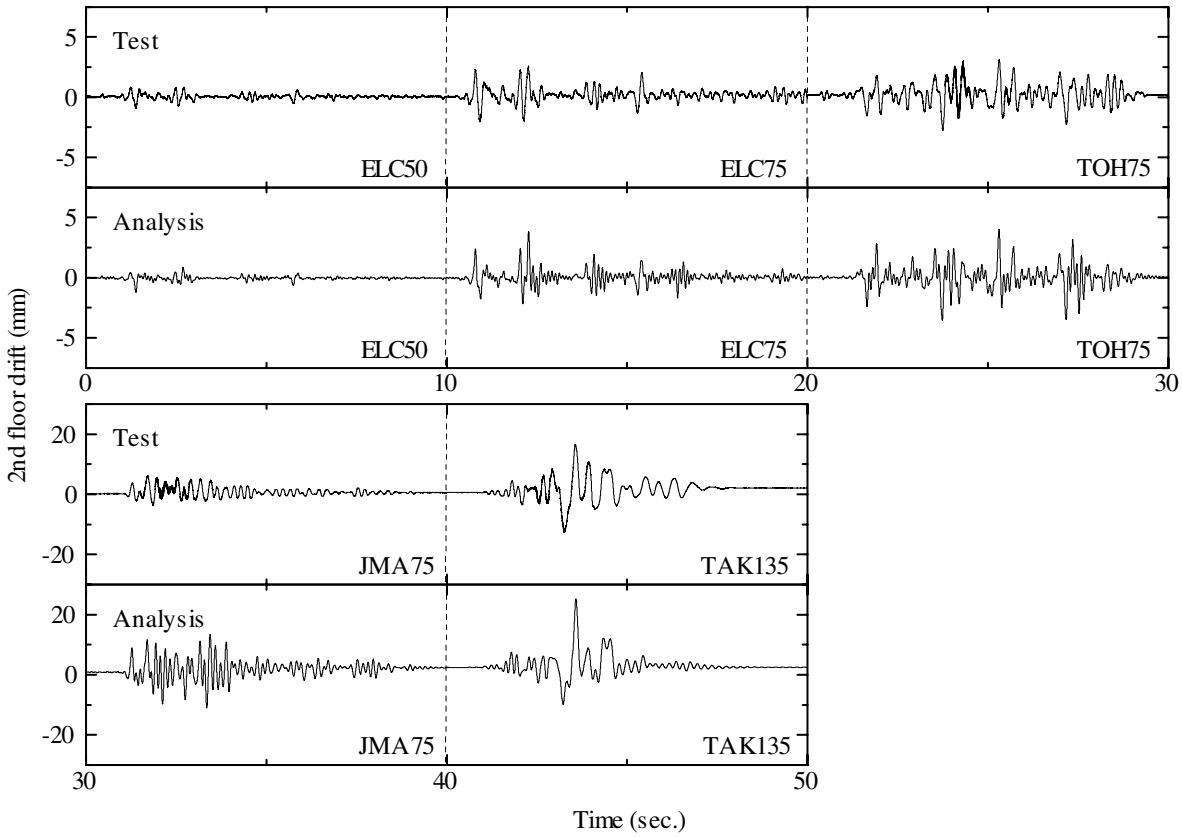

Figure 12 Observed and calculated waveforms of first-story relative displacement

Figure 13 compares the observed and calculated relations between the base shear and the overall drift. While the response of the test structure could not be simulated after the shear wall in the first story failed in shear and the test structure formed the story yield mechanism, it was simulated well by the analysis until the cycle in which the shear wall failed in shear. Considering the comparisons shown above, it was verified that responses of wall-frame systems with soft first story could be simulated before shear walls failed in shear by using these analytical methods.

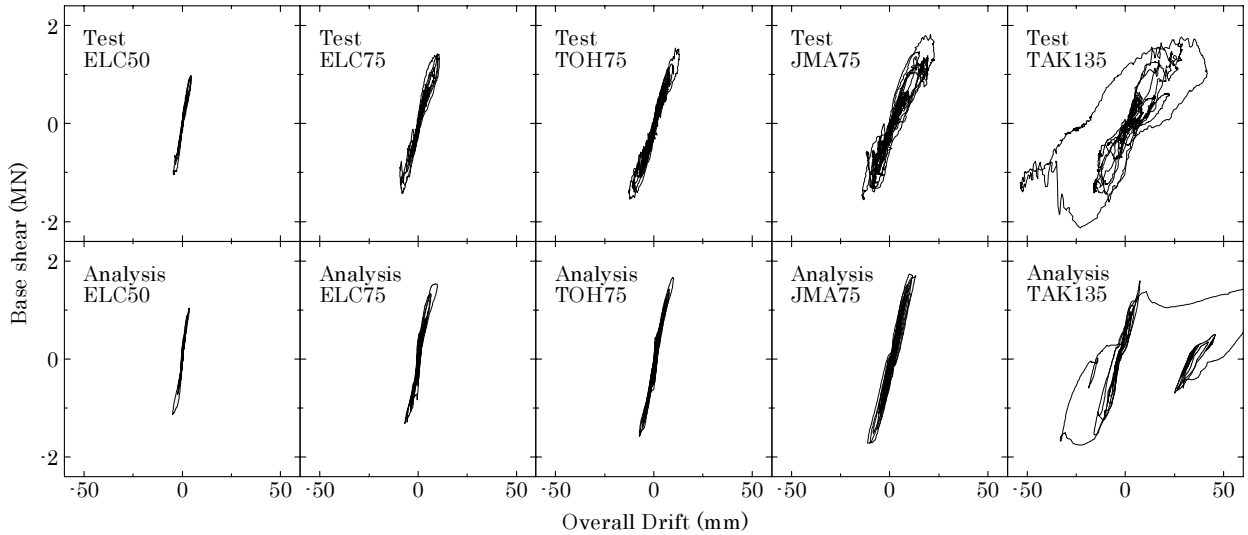

Figure 13 Observed and calculated hysteresis relations of base shear vs. overall drift

EFFECTS OF SHEAR SOFTENING OF SHEAR WALL

Pushover Analyses with/without Shear Softening of Shear Wall

The collapse process and mechanism of this system were investigated through pushover analyses of the prototype structure. The earthquake load distribution was assumed as a rectangular mode shape, which was based on the results from the shaking table test.

Figure 14 shows the observed and calculated relationships between the base shear coefficient and the overall rotation angle of the prototype structure from the pushover analysis. The wall shear, the compressive column shear and the tensile column shear in the soft first story, which are divided by the total weight, are also shown in this figure. The prototype structure formed the overall yield mechanism associated with flexural yielding of the wall base, flexural yielding of the column bottom on the compressive side and tensile yielding of the column on the tensile side in the first story at the overall rotation angle of about 1/500 rad. However, the yield mechanism changed into the story yield mechanism due to shear failure of the shear wall and flexural yielding at the top and bottom ends of the columns around the overall rotation angle of 1/100 rad. This was caused by the shear softening of the shear wall with opening of flexural shear cracks, which was also observed in the test results.

The relationships of base shear coefficient vs. overall rotation angle were calculated from another pushover analysis using a conventional shear wall model without the shear softening of shear wall, which was a truss model proposed in reference Matsumoto [13] as illustrated in Figure 15, in order to show the effects of the shear softening of shear wall on the responses of this system. The truss model consists of the shear panel and the boundary columns to resist flexure, the diagonal members to resist shear, and the upper and lower beams to connect them. The analytical results with and without the shear softening of shear wall are compared in Figure 14. It shows that the conventional shear wall model does not simulate the change of the yield mechanism due to the degradations of stiffness and strength of concrete under the biaxial stress.

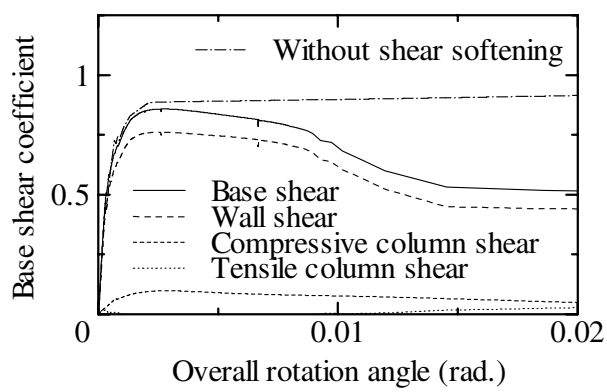

Figure 14 Comparison of the analytical results with and without the shear softening

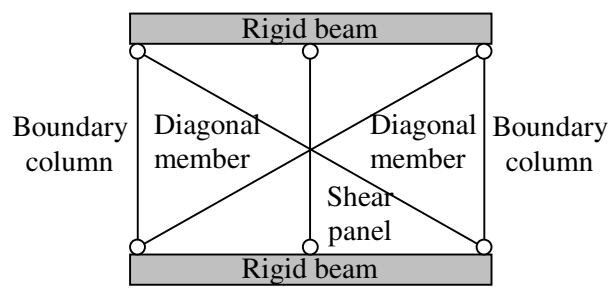

Figure 15 Conventional shear wall model

Effects of Structural Configurations

Pushover analyses were conducted using the shear wall model considering the shear softening for fifteen wall-frame buildings including regular and vertically irregular ones shown in Table 2. These buildings were subjected to static loading of inverted triangular and rectangular distributions in the inplane direction of shear walls. In this paper, the results from the analyses assumed each load distribution to be rectangle are shown below.

Figure 16 shows the relationships between the base shear coefficient and the overall rotation angle of all buildings with their collapse processes. The wall shear, the compressive column shear and the tensile column shear in the first story, which are divided by the total weight of each building, are also shown in this figure. B-series formed the overall yield mechanism as shown in Figure 5(a), then the system

mechanism changed into the story yield mechanism as shown in Figure 5(b). C-series except 6C1.5 formed the overall yield mechanism due to flexural yielding of the wall bases in the second story, because the flexural strength in the first story increased in these buildings due to strengthening the first-story columns. After that, these buildings formed the story yield mechanism in the second story at the larger deformation. The collapse processes of 6C1.5 and W-series were the same as those of B-series. The maximum base shear was larger in case of the building with larger column sectional area. However, differences between those of 10C1.5 and 10C2.0, and 14C1.5 and 14C2.0 were little, because these buildings formed the flexural yield mechanism above the second floor. Therefore, the seismic performances of the buildings with the soft first story are not necessarily improved by strengthening only the first-story columns. On the one hand, the building with larger wall sectional area had larger strength and ductility capacities. As mentioned above, however, the system mechanism of 6W1.5 and 14W1.5 also changed from the overall yield mechanism into the story yield mechanism in spite of the wall ratios on the first floor of 6W1.5 and 14W1.5 were equivalent to or larger than those on the upper floors. This means that not only vertically irregular wall-frame systems but also regular ones can form the story yield mechanism at large deformation.

Figure 17 shows the distributions of the horizontal displacements at the overall yielding, the story yielding and the overall rotation angle of 1/50. Although the larger overall flexural deflection was observed in case of the higher building at the overall yielding, the story drift concentrated in the first or second story of all buildings at the larger deformation. The first-story drifts of B-series, W-series and 6C1.5, and the second-story drifts of C-series except 6C1.5 were much larger than those in the other stories at the story yielding and the overall rotation angle of 1/50.

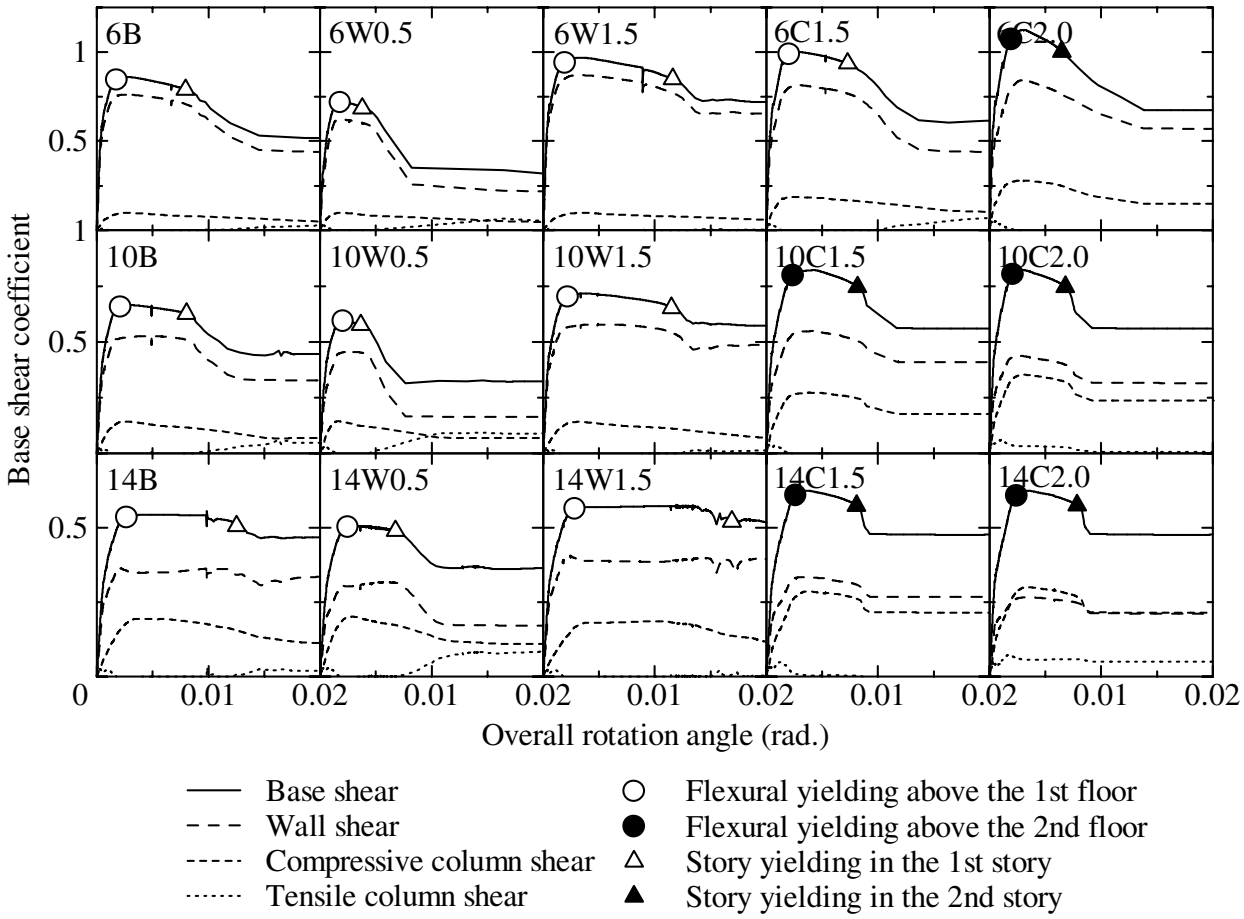

Figure 16 Relationships of base shear coefficient vs. overall rotation angle of fifteen buildings

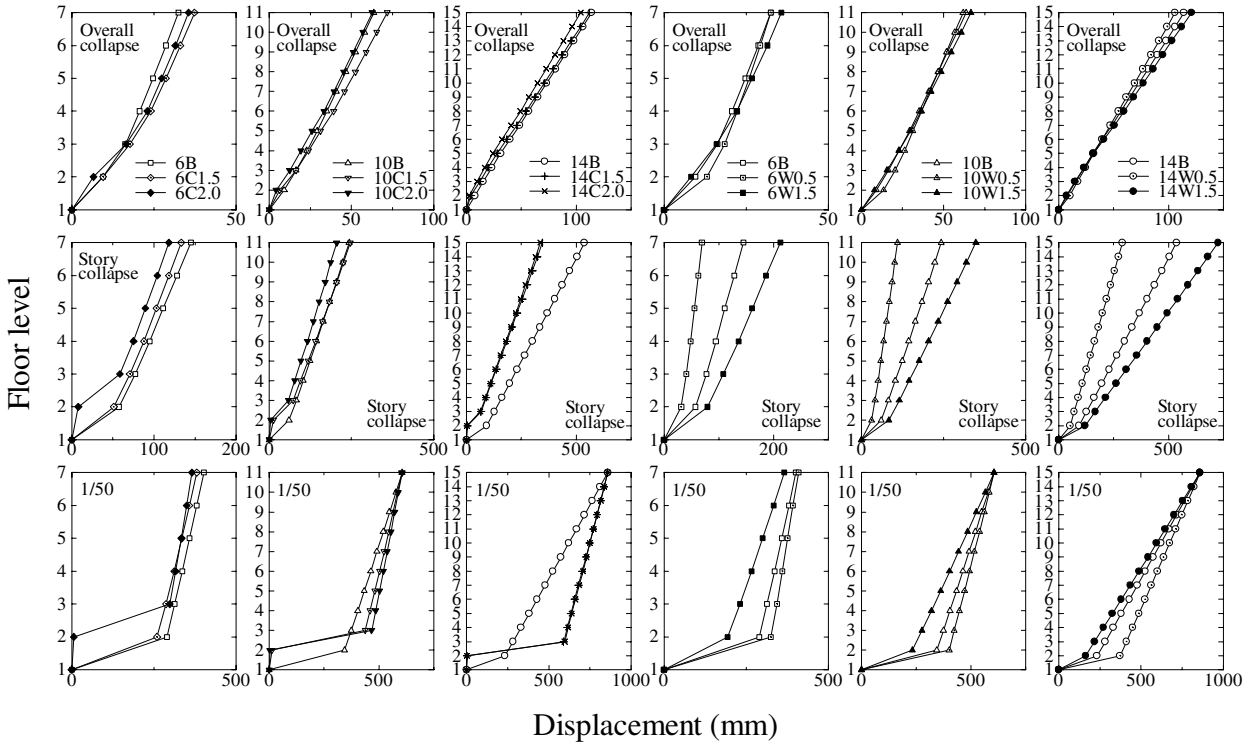

Figure 17 Distributions of horizontal displacements of fifteen buildings

CONCLUSIONS

Seismic performances of reinforced concrete wall-frame structural systems were investigated through a shaking table test and three-dimensional nonlinear frame analyses. Major findings obtained in this study can be summarized as follows.

(1) A one-third scaled model of the prototype structure designed for this study was tested on the Large-scale Earthquake Simulator, NIED, Japan. The test structure formed the overall yield mechanism due to flexural yielding of the wall base and the column bases on the compressive side and axial yielding of the tensile columns. However, with the progress of inelastic deformation, the displacement concentrated in the soft first story, which was caused by the degradation of shear stiffness of the first-story wall. Finally, the system mechanism changed into the story yield mechanism with shear-slip failure in the wall and flexural yielding at the top and bottom of the columns in the first story.

(2) The three-dimensional nonlinear dynamic analysis of the test structure was carried out using the fiber model for the columns and the 4-node isoparametric element model for the shear walls. The shear softening of shear wall was considered in the shear wall model. The test results were simulated well until the cycle in which the first-story wall failed in shear. This means that these analytical models can adequately simulate responses of wall-frame systems until shear walls fail in shear.

(3) The effects of the shear softening of reinforced concrete shear wall on responses of fifteen wall-frame system with different structural configurations were investigated analytically. Although the collapse processes of B- and W-series were the same as those of the test structure, C-series except one case formed the flexural yield mechanism above the second floor. This means that the seismic performances of the wall-frame systems with the soft first story are not necessarily improved by strengthening only the first-story columns. Moreover, it was found that not only vertically irregular wall-frame systems but also regular ones might form the story yield mechanism at large deformation.

ACKNOWLEDGEMENTS

The shaking table test was successfully conducted at the Large-scale Earthquake Simulator, National Research Institute for Earth Science and Disaster Prevention (NIED) under financial supports of Science and Technology Agency and Building Research Institute (BRI) in July 2000. Cooperative works of many researchers for conducting the test and data analysis should gratefully be acknowledged, especially those of Prof. Hiroshi KURAMOTO, Toyohashi University of Technology, Dr. Toshibumi FUKUTA, BRI, Dr. Nobuyuki OGAWA, Mr. Atsushi KATO, NIED, Dr. Kazuyuki MATSUMOTO, Fujiki Komuten, and Mr. Seiya NARAOKA, Mr. Masahiro HIRATA, and Mr. Yousok KIM, Earthquake Research Institute.
The analytical study was partially supported by Grant-in-Aid for Young Scientists (B) (No. 14750467) of the Ministry of Education, Culture, Sports, Science and Technology.

REFERENCES

1. Earthquake Engineering Research Institute. "Northridge Earthquake of January 17, 1994: reconnaissance report." Earthquake Spectra, Vol. 11, Supplement C, 1996.
2. Architectural Institute of Japan. "Preliminary reconnaissance report of the 1995 Hyogoken-Nanbu Earthquake." 1995.
3. Earthquake Engineering Research Institute. "Chi-Chi, Taiwan, Earthquake of September 21, 1999: reconnaissance report." Earthquake Spectra, Vol. 17, Supplement A, 2001.
4. Chopra A. K., Clough D. P. and Clough R. W. "Earthquake resistance of buildings with a soft first story." Earthquake Engineering and Structural Dynamics, Vol. 1, 1973, pp. 347-355.
5. Yoshimura M. and Iwabuchi K. "Nonlinear analysis of reinforced concrete building with soft first story collapsed by 1995 Hyogoken-Nanbu Earthquake (in Japanese)." Journal of Structural and Construction Engineering, Architectural Institute of Japan, No. 486, 1996, pp. 75-84.
6. Negro P. and Taylor C. A. "Effect of infills on the global seismic behaviour of R/C frames: results of pseudodynamic and shaking table tests." Eleventh World Conference on Earthquake Engineering, Disc 4, 1996, Paper No. 2045.
7. Kuramoto H. and Kabeyasawa T. "Sub-structure pseudo dynamic testing on 6-story reinforced concrete frame with soft first story." The Second U.S.-Japan Workshop on Performance-Based Earthquake Engineering Methodology for Reinforced Concrete Building Structures, 2000, pp. 145-156.
8. Nakamura Y., Uehan F. and Inoue H. "Waveform and its analysis of the 1995 Hyogo-Ken-Nanbu Earthquake (II) (in Japanese)." JR Earthquake Information No. 23d, Railway Technical Research Institute, 1996.
9. Kabeyasawa T., Sanada Y. and Maeda M. "Effect of beam axial deformation on column shear in reinforced concrete frames." 12th World Conference on Earthquake Engineering, CD-ROM, 2000, Paper No. 1017.
10. Chen S. and Kabeyasawa T. "Modeling of reinforced concrete shear wall for nonlinear analysis." 12th World Conference on Earthquake Engineering, CD-ROM, 2000, Paper No. 1596.
11. Vecchio F. J. and Collins M. P. "The modified compression field theory for reinforced concrete elements subjected to shear." ACI Journal, Vol. 83, No. 2, 1986, pp. 219-231.
12. Watabe M., Ohashi Y. and Hasebe H. "Research on design earthquake ground motions for high-rise buildings (part 1) (in Japanese)." Summaries of Technical Papers of Annual Meeting Architectural Institute of Japan, B Structures I, 1985, pp. 135-136.
13. Matsumoto K., Kabeyasawa T. and Kuramoto H. "A member model for reinforced concrete shear wall in non-linear and dynamic structural analyses (in Japanese)." Proceedings of the Japan Concrete Institute,Vol. 15, No. 2, 1993, pp. 1173-1178.