13th World Conference on Earthquake Engineering
Vancouver, B.C., Canada
August 1-6, 2004
Paper No. 2228

STUDY ON SHEAR PANEL DAMPERS USING LOW YIELD STRENGTH STEEL APPLIED TO REINFORCED CONCRETE BUILDINGS

Yoshihiro OHTA[1], Hirofumi KANEKO[1], Masahito KIBAYASHI[1], Masayuki YAMAMOTO[1], Tetuya MUROYA[1], Kazutomi NAKANE[1]

SUMMARY

This paper discusses two tests on the shear panel dampers applied to the reinforced concrete buildings. Test 1 is an experiment of reinforced concrete beam-column assemblies with shear panel damper using low yield strength steel subjected to horizontal reversed cyclic loads. Test 2 is an experiment of shear panel damper using low yield strength steel subjected to horizontal reversed cyclic loads. The Shear panel in the Test 2 has a device in order to slide freely to the axial deformations of reinforced concrete columns. It was concluded that the shear panel damper using low yield strength steel showed the expected hysteretic performance to horizontal reversed cyclic loads in the reinforced concrete frame in the Test 1, and that the shear panel damper with the vertical displacement slide device had the same efficiency as shear panel damper without an initial axial force in the Test 2.

INTRODUCTION

Shear panel dampers using low yield strength steel have been applied to many steel buildings. It is, however, recently used to high-rise reinforced concrete apartment buildings in order to improve on the performance to earthquake motions with decreasing damage of the main frames because it is compact and economic.

The first purpose of this paper is to confirm that the shear panel damper using low yield strength steel show the expected hysteretic performance to horizontal reversed cyclic loads in the reinforced concrete frame. To achieve the expected performance of damper, the damage in connecting members need to be maintained minimal. Also, the performance of total damping system, including the connection and above and lower beams, must be properly evaluated.

The second purpose of this paper is to clarify the behavior of the shear panel damper with a device enable to slide freely to the axial deformations of reinforced concrete columns. The height of reinforced concrete columns will be shortened during the construction and after the completion of construction owing to dead load, creep and shrinkage of concrete. Axial compression is occurred in the panel damper, which is rigidly joined to the reinforced concrete frame, due to this shortening of columns. If the axial compression becomes significant, the energy dissipation capacity of the shear panel damper would be sacrificed. To avoid this effect, the installation of the shear panel damper in the reinforced concrete frame

[1] Takenaka Corporation

should be done after all shortening of columns are completed, but it causes significant delay in construction. This axial compression in device is eliminated by introducing a “slide free section” in series to shear panel damper. This additional mechanism will transfer the shear force to damper while eliminating the axial force and delay in construction.

For the above objectives, the authors report results of two tests on the shear panel damper.

TEST1: EXPERIMENT OF REINFORCED CONCRETE BEAM-SUPPORT COLUMN ASSEMBLIES WITH A SHEAR PANEL DAMPER SUBJECTED TO HORIZONTAL REVERSED CYCLIC LOADS

Test Specimen

The geometric configuration of the specimen and the arrangement of reinforcements are shown in Fig.1.This specimen was approximately half scale model of a section of the frame composed of two beams, four “support columns” and a shear panel damper. (Fig.2) The detail of the shear panel damper is shown in Fig.3. This damper had H shaped section and a low yield strength steel plate was used for the web plate, which is hatched in Fig.3. The beam and the support column, the support column and the shear panel damper were post-tensioned by PC bars to attach each other rigidly. The PC bars were unbonded, greased-and-sheathed bar and inserted into steel spiral sheaths in the beams and the support columns. The arrangement and the volume of the reinforcing bars and PC bars in the beams and support columns were designed that the stress of reinforcing bars and PC bars shouldn’t reach their yield strength under horizontal reversed cyclic loads and the shear panel damper should show the good hysteretic performance after the shear stress of the shear panel damper reached to shear yield strength of low yield strength steel. The mechanical properties of reinforcement, PC bars, steel plate, and concrete are summarized in Table1, 2.

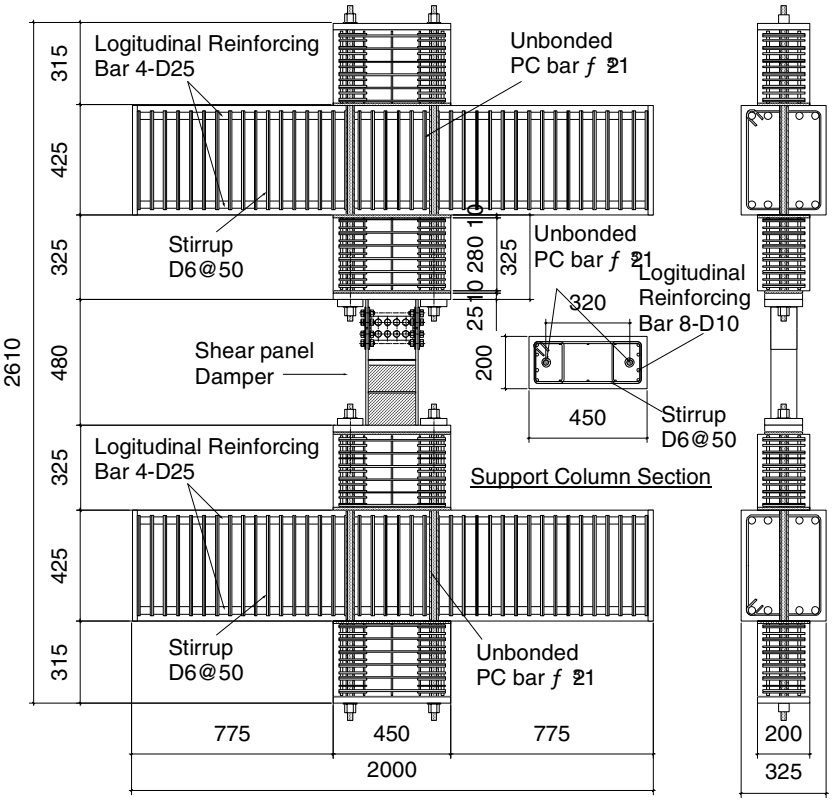

Fig.1 Configuration of the specimen and arrangement of reinforcements

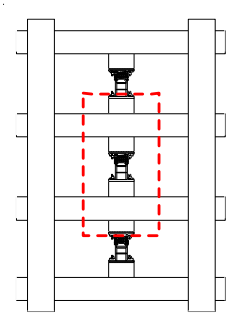

Fig.2 Location of shear panel damper set up in a frame

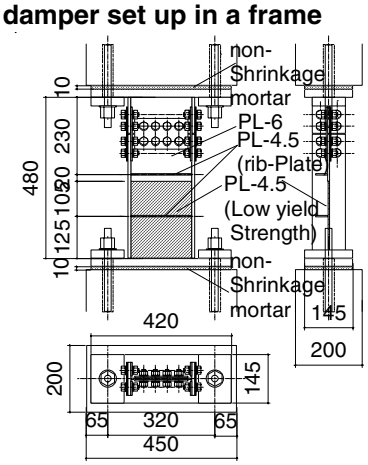

Fig.3 Detail of shear panel damper

Table 1 Properties of reinforcements and steel plates

		Yield Strength N/mm^2	Tensile Strength N/mm^2	Elon-gation %
Reinfor-cing bar	D6	372	532	19.1
	D10	368	538	18.8
	D25	385	570	24.2
PC bar	φ21	1230	1357	11.0

	Yield Strength N/mm^2	Tensile Strength N/mm^2	Elon-gation %
t-4.5	233	334	44.2
t-6	461	579	20.7
t-9	396	555	25.2
t-25	358	524	29.8

Table 2 Properties of concrete

Age of Concrete at The test day	Compressive Strength N/mm^2	Modulus of Elasticity $\times 10^4$N/mm^2
7	22.1	2.67
28	29.6	3.09
35(Specimen Loading)	30.2	3.12

Test Program

The loading apparatus used in the test is shown in Fig.4. The repeated horizontal cyclic loading was applied to the top of the column by a hydraulic jack. The bottom of the support column was held in poison but allowed to rotate freely. The ends of the beams were allowed to displace horizontally and rotate freely. The horizontal drift routine to which the specimen was subjected is shown in Fig.5. The horizontal drift ratio is the drift at higher beam divided by the height two beams.

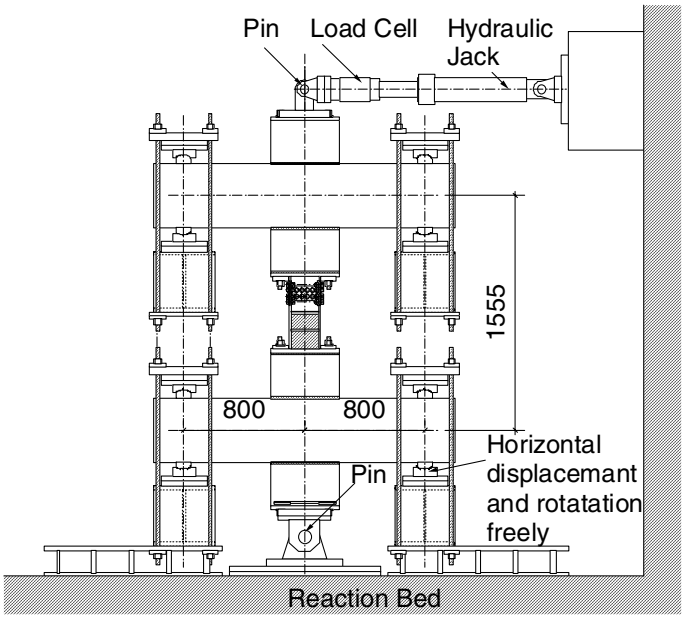

Fig.4 Loading apparatus

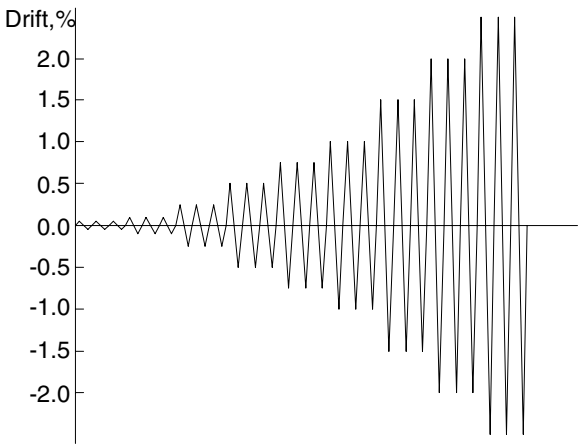

Fig.5 Drift routine

Test Result

Overall behavior

The overall horizontal load -versus- drift relationship is shown in Fig.6. The final appearance of the beam –support columns assembly and the shear panel damper are shown in Photo.1. Observed behavior of the specimen during the test can be summarized as below.

After the initial flexural crack of the upper beam at 0.05-0.1% drifts, the shear yield of the low yield strength web plate occurred approximately at 0.25% drifts. Flexural and shear cracks in the beams, support columns and the beam-support column joints were observed at this point but no change of the behavior in the shear panel damper was noticed and the good hysteretic performance was confirmed. The slip between support column and the shear panel damper occurred at 2.0% drift, but deterioration of the horizontal reaction force was minimal. The welding between low yield strength web panel and rib plate cracked at the first cycle of 2.5% drift to the negative direction and the crack developed to the joint between low yield strength web panel and flange plate at the second cycle of 2.5% drift to the positive direction, and the horizontal reaction force deteriorated substantially.

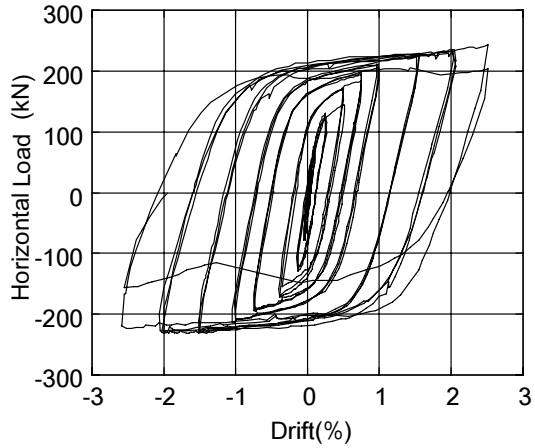

Fig.6 Horizontal load -versus- drift relationship

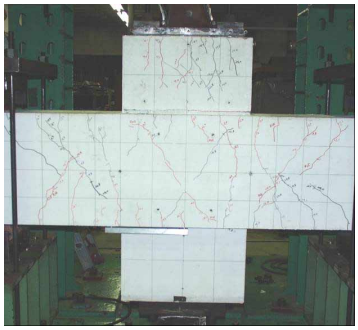

Beam-support column assembly

Shear panel Damper

Photo.1 final apparatus

Strains of reinforcements

To grasp degree of damage in the beam, the horizontal load -versus- strains of the longitudinal bars at the critical section in the upper beam are shown in Fig.7. The strains of the longitudinal bars didn't reach to 0.1% during the test. And the strains of other reinforcements, such as stirrups in the beams and PC bar, also didn't reach to the yield strain. This result showed that the panel exhibited good hysteretic performance by maintaining the damage in beams and support columns minimum.

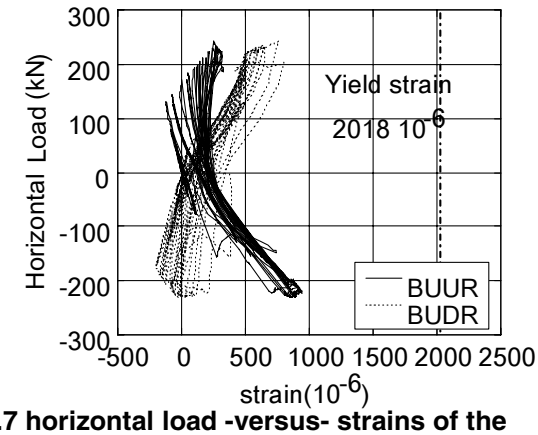

Fig.7 horizontal load -versus- strains of the longitudinal bars at the critical section

Discussion

Comparison between experimental results and calculated values

The maximum shear loads in the test, along with the yield and the ultimate strength calculated from the material property of the low yield strength web plate are shown in Table 3. The ratios of the maximum

values from the test to the calculated yield strength are approximately 2.1 and the ratios of the maximum values from the test to the calculated breaking strength are approximately 1.5. The locations of hinges of the flange plates, which are shown in Fig.8, are estimated from final appearance of the shear panel damper shown in Photo.1 along with the distribution of strains on the flange plates. The calculated horizontal load shared on the flange plates in these locations of hinges shown in Fig.8 and the calculated value of horizontal load plus the ultimate strength is shown in Table 3. This value from calculation reasonably agrees with the maximum shear loads observed in the test and it is necessary to pay attention to horizontal load shared on the flange plates when the reinforced concrete members are designed.

Table 3 Comparison between experimental shear load and calculated shear load

Qmax kN ①	Qy kN ②	Qu kN ③	Qf kN ④	Qu+Qf kN ③+④
243	110 (2.21)	158 (1.54)	53	211 (1.15)

Qmax : Experimental Maximum Shear Load
Qy : Calculated Shear Yield Strength of Web Plate
Qu : Calculated Shear Ultimate Strength of Web Plate
Qf : Calculated Horizintal Load Shard on Flange Plates
( ) : ratio of Qmax to each value

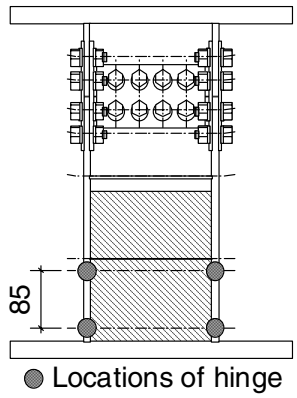

Fig.8 Location of Hinge in shear panel Damper

TEST2:EXPERIMENT OF A SHEAR PANEL DAMPER WITH A VERTICAL DISPLACEMENT SLIDE DEVICE SUBJECTED TO HORIZONTAL REVERSED CYCLIC LOADS

Test Spcimen

To understand the behavior of shear panel with a vertical displacement slide device, slide free device hereafter, to the axial deformations of reinforced concrete columns, the following specimens were tested. The geometric configurations of the specimens are shown in Fig.9. Specimen No.1 had slide free device so that the shear panel damper shouldn't support vertical loads when reinforced concrete columns around this damper are shortened by creep and shrinkage of the concrete. This specimen was composed of an upper Box-steel and a lower H-steel and a low yield strength steel plate was employed in the web of H-steel. The H-steel was inserted in the Box-steel and a space between a top plate of the Box-steel and the H-steel was kept not to restrain the vertical displacement. Spaces between the flange of H-steel and the Box-steel were filled with non-shrinkage

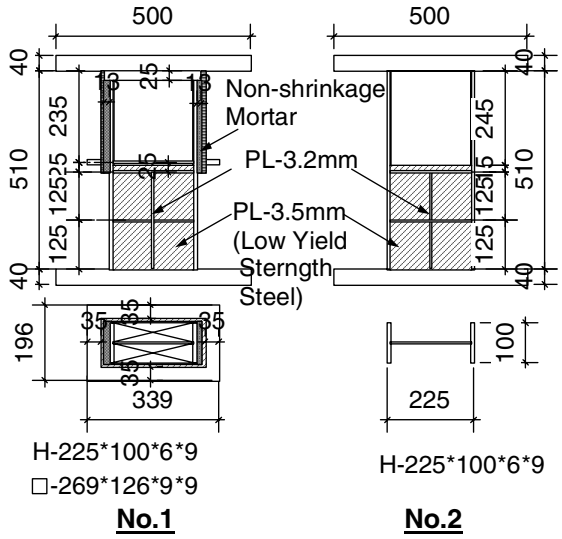

Fig.9 Configuration of the specimen

mortar that the horizontal load could transfer from the Box-steel to the H-steel. Specimen No.2 is composed of only H-steel shear panel damper that the behaviors under horizontal cyclic loads should be compared with Specimen No.1.
The mechanical properties of steel plate are summarized in Table4.

Table 4 Properties of steel plates

	Yield Strength N/mm^2	Tensile Strength N/mm^2	Elon-gation %
t-3.5	245	330	36.0
t-6	645	536	27.2
t-9	413	551	23.7

Test Program

The loading apparatus is shown in Fig.10. The repeated horizontal cyclic loading was applied to the specimen by a horizontal hydraulic jack. Two vertical hydraulic jacks were arranged at the both sides of the specimen and kept the length of the their strokes under cyclic loads. They represented reinforced concrete columns around this damper in practical frame that initial loads are set zero. The shear angles routine of the low yield steel web plate consisted of three reversed cyclic loadings at every shear angle of 0.5γy, γy, 2γy, 4γy, 6γy, 10γy, 20γy, 25γy, 30γy 40γy, and 50γy (γy: calculated shear angle at shear yield of the low yield strength web plate=0.18%), and reversed cyclic loadings at 10% shear angle were repeated of until sharp deterioration of the horizontal load is observed.

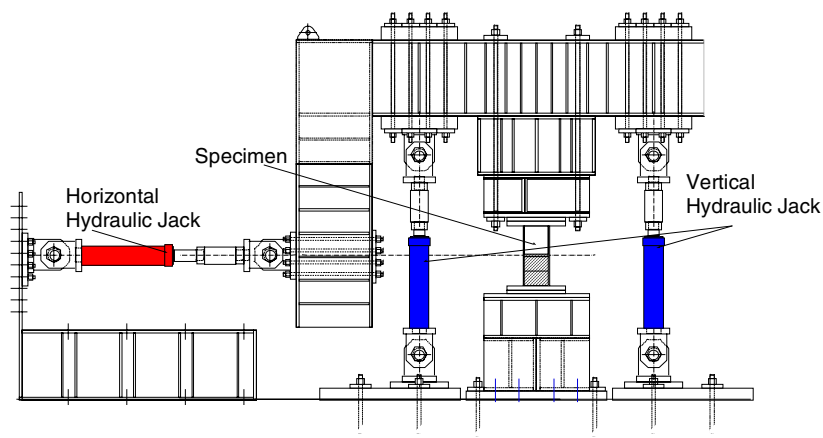

Fig.10 Loading apparatus

Test Result

Overall behavior

The overall horizontal loads -versus- shear angles of the low yield steel panel relationships are shown in Fig.11. Observed behavior of the specimens during the test can be summarized as below.

In the test of Specimen No.1, the shear yield of the low yield strength web plate occurred approximately at 0.18% shear angle and the stable hysteretic curve was seen after this point. The shear buckling of the low yield strength web panel started at 40 γy, but no significant change in the hysteretic curve was observed. The welding between low yield strength web panel and rib plates cracked at the forth cycle of 10.0% shear angle to the positive direction and the horizontal load deteriorated substantially. However, the mortar in the specimen wasn't crushed finally.

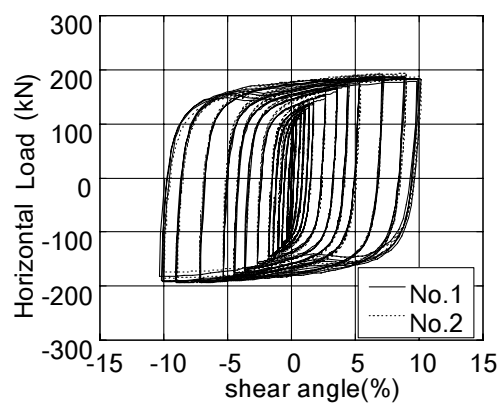

Fig.11 Horizontal load -versus- shear angle relationship

In the test of Specimen No.2, the shear yield of the low yield strength web plate occurred approximately at 0.18% shear angle and the stable hysteretic curve was seen as Specimen No.1. The shear buckling of the low yield strength web panel started at 40 γy, but the change of the hysteretic curve wasn't recognized. The welding between the low yield strength web panel and a rib plate cracked at the second cycle of 10.0% shear angle to the positive direction and the horizontal load deteriorated substantially. Consequently, observed behavior of two specimens during the test was almost identical.

Change of axial load

To confirm the behavior of slide free device , the changes of axial loads at the peak of each cyclic shear angle are shown in Fig.12. In the test of Specimen No.1, the maximum value of axial load was 10.3kN in the tension and was 24.0kN in the compression. In the test of Specimen No.2, the maximum value of axial load was 16.4kN in the tension and was 40.9kN in the compression. The calculated
axial load at the yield point of the low yield strength web plate is 618kN. The difference of axial load between calculation and test result for each specimen was no more than 6% of the calculated axial load at the yield point.

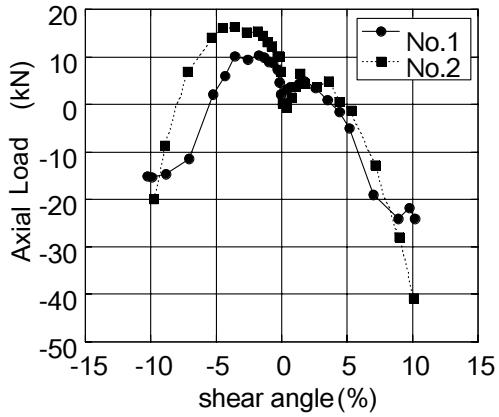

Fig.12 Change of axial load

Discussion

Comparison of effects of dampers between Specimen No.1 and No.2

The relationships between accumulated absorbed energy and accumulated shear angles of Specimen No.1 and No.2 are shown in Fig.13. The relationships in Specimen No.1 and No.2 were approximately identical, and the accumulated energy was 857kNrad.in Specimen No.1 and was 747kNrad.in Specimen No.2 at the end of the test.

Therefore it was confirmed that Specimen No.1 with the slide free device had equivalent efficiency to shear panel damper in Specimen No.2.

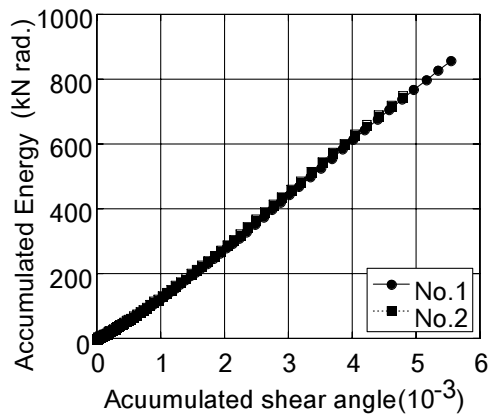

Fig.13 Accumulated energy

CONCLUSION

From two tests, following conclusions are derived.

1) To confirm the expected hysteretic performance of shear panel damper using low yield strength steel to horizontal reversed cyclic loads in the reinforced concrete frame, the test of reinforced concrete beam-column assemblies with a shear panel damper subjected to horizontal reversed cyclic loads was conducted. The shear yield of the low yield strength web plate occurred approximately at 0.25% drifts and the stable
hysteretic curve was seen without sharp deterioration of the horizontal load until 2.5% drifts, and the reinforced concrete members weren't damaged severely at the end of the test. And then it is necessary to pay attention to horizontal load shared on the flange plates in designing the reinforced concrete.

2) When a length of a reinforced concrete column around a damper is shortening in the construction and after the finish of work owing to dead load and creep and shrinkage in concrete, a shear panel damper with a slide free device in order to avoid occurrence of big axial compression in it was proposed. Specimen No.1 with a vertical slide displacement device had equivalent stable hysteretic curve for the relationship between horizontal loads and equivalent energy dissipation capacity to an shear panel damper in Specimen No.2.