13th World Conference on Earthquake Engineering
Vancouver, B.C., Canada
August 1-6, 2004
Paper No. 2156

NUMERICAL MODELING OF A PSD TEST ON A DUAL RC SYSTEM

Luca MARTINELLI[1]

SUMMARY

This work describes the setup and the performance of a numerical model pertaining to the global type. In such a model, only few elements are used to represent a complete structural element. Here, columns, shear walls, beams and coupling beams are modeled using a column fiber model previously developed. The obtained results highlight the possibility of these models to capture, with reasonable accuracy, the structural response even for a relatively complex structure as is a dual RC system having coupled shear walls.

INTRODUCTION

Displacement Based Design has recently become a viable alternative to the concept of the force based design methods, adopted in most of the seismic codes; it is however still in a development stage. Due to the costs, time, and difficulties related to the experimental testing of full scale structures it would be helpful to possess adequate numerical models able to predict with sufficient accuracy, at a reasonable computational effort, the structure's response. These numerical model, when available, and validated against the results of experimental test might be used to study several different seismic inputs. In the field of seismic engineering, Pseudo Dynamic (PSD) testing has emerged as a powerful technique for testing large scale structures and has been recently adopted to assess the relative performance of two dual reinforced concrete systems (Colombo et al. [1]), working in parallel. These were differently designed according either to a novel Displacement Based Design (DBD) method (Panagiotakos and Fardis [2]) or to Eurocode 8 (EC8) [3]. Each dual system structure was composed of a moment resisting frame part acting in parallel to coupled shear walls. This experimental campaign was selected to assess the ability of simple numerical models of the global type, in which each structural element is subdivided in only a few finite elements, to reproduce, with reasonable accuracy, the structural response of a relatively complex structure as is the above mentioned dual RC system. The results presented in this work have been obtained modeling the columns, the shear walls and the beams using a column fiber model previously developed by the author.

THE "DUAL FRAME" STRUCTURE

The tested structure, here termed "dual-frame", is a four floor building (Figures 1 and 2) of the dual type: the resisting system to the horizontal forces is partially formed by shear walls and partially by moment

[1] Politecnico di Milano, Milano, Italy. Email: martinel@stru.polimi.it

resisting frames. On each side, the walls are coupled together by coupling beams and have different cross-section and dimensions: the more external have an “L” cross section 1.0 m x 0.5 m x 0.25 m, while the remaining ones have a rectangular cross-section 1.0 m x 0.25 m. The coupling beams have rectangular cross-section 0.25 m x 0.45 m and span 0.87 m; the shear slenderness is then around 2. The beams in the moment resisting frames retain the cross-section of the coupling beams, but they span a different length: 4.70 m or 4.10 m, depending on the bay considered. The columns have rectangular cross-section 0.45 m x 0.25 m. The two frames are at a distance of 4 m, have a total height of 12.5 m, an interstory height of 3.5 m for the first floor and 3.0 m for the others and are connected by a 0.15 m slab and 0.25x0.45 m beams at each floor. The structure has been tested parallel to the frames using the pseudodynamic technique in the ELSA laboratory of the Joint Research Center at Ispra (Italy). The reader is referred to [1] and [2] for a complete description of the design procedure, detail design, test set-up and results. In the following, only a brief summary of the main features of the structure will be presented.

Each side or the structure was designed following a different code: the “North” side according to the traditional forced based design (FBD) approach of Eurocode8 [3] (EC8) and a ductility class “high” (DCH), the “South” side according to a displacement based design (DBD) methodology proposed by Panagiotakos and Fardis [2]. For both design the design peak ground acceleration (PGA) was 0.4 g and the design soil was of class “B” (medium dense sand or medium stiff clays). The base value for the behavior factor is, for the EC8 design, q = 5. Both frames were designed for the same seismic forces on the base of the response obtained using the uncracked cross-section properties and rigid nodes between columns and beams for the beams length. Adopting such a model, the first period of the structure is 0.51 s. The designers report a fairly constant design interstory drift of 0.48, 0.49, 0.48 and 0.39, proceeding from foundations to the roof, an overturning moment due to axial forced in the coupled wall equal to the sum of the individual flexural moments, a 70% share of the coupled walls in resisting the base seismic design shear.

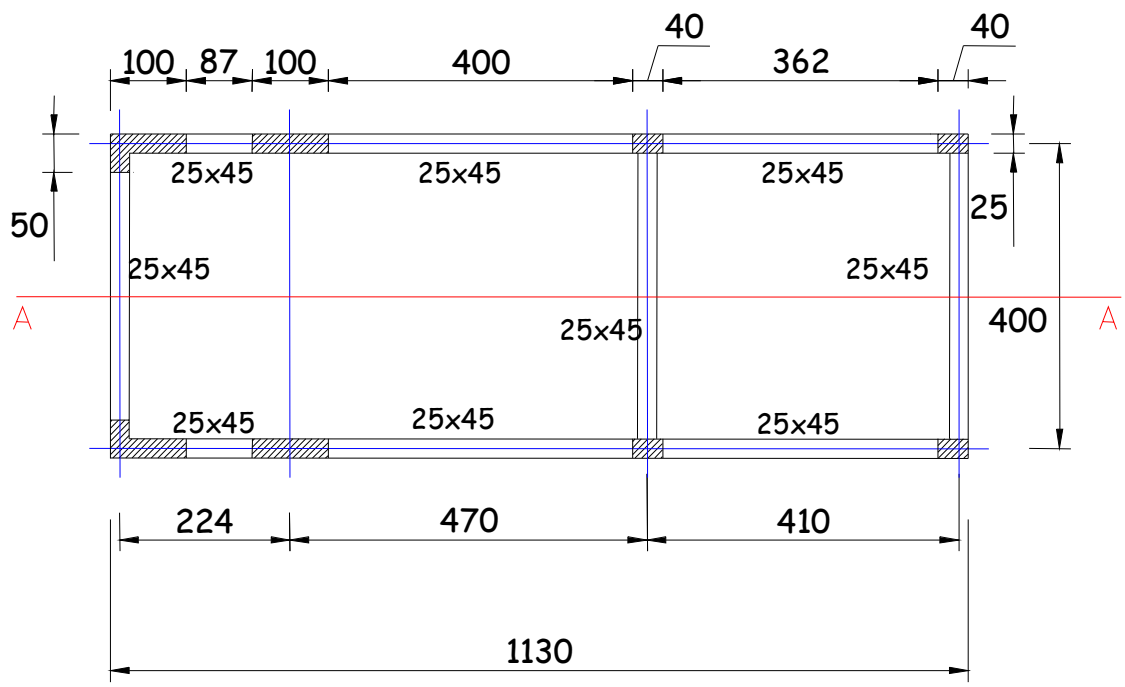

Figure 1. Horizontal cross-section of the “dual frame” building; measures in cm.

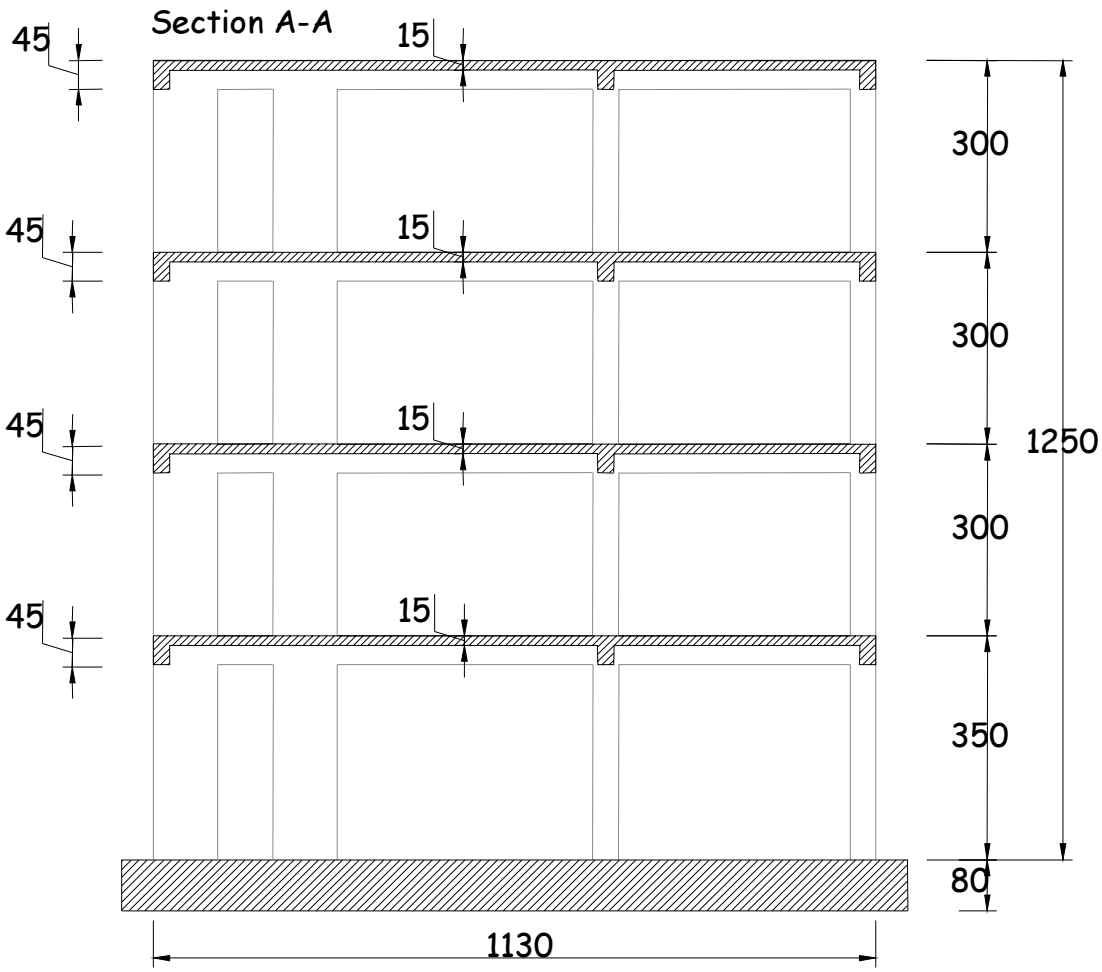

Figure 2. Vertical cross-section of the “dual frame” building; measures in cm.

The beams and the coupling beams of the DBD side have a longitudinal reinforcement equal to two 12 mm bars both in tension and compression. The critical zone length is 1.5 the section height and stirrups are 8 mm in diameter at a spacing of 21 cm for the first and second floor while it is 22.5 cm for the third and forth. Outside the critical zones spacing is 30 cm. The coupling beams have stirrups 8 mm in diameter at 8 cm spacing along all their length. The coupling beam of the first floor has a diagonal reinforcement of 2 bars 20 mm in diameter for each diagonal.

The beams of the EC8 side have longitudinal reinforcement equal to three 12 mm bars in tension and compression. The critical zone length is 2 times the section height and stirrups are 8 mm in diameter at a spacing of 6 cm in the critical zone, while outside are at 30 cm. The coupling beams have two 14 mm bars in tension and in compression and stirrups 8 mm in diameter at 6 cm spacing along all their length at the first interstory while, they are at 7 cm in the remaining ones. Stirrups inside the beam-column joint are 8 mm in diameter at 6.5 cm for the outer column at the first two interstory, while the spacing is 7.5 cm for the remaining two; the inner column has stirrups at 7.5 cm at the first interstory and 9 cm elsewere. Figure 3 shows the vertical and horizontal reinforcement for the vertical elements (columns and walls) of both sides, The main difference between the two design is mainly due to the different spacing of the stirrups in the critical zone. Overall, the DBD design procedure leads to more economical structures which use less steel.

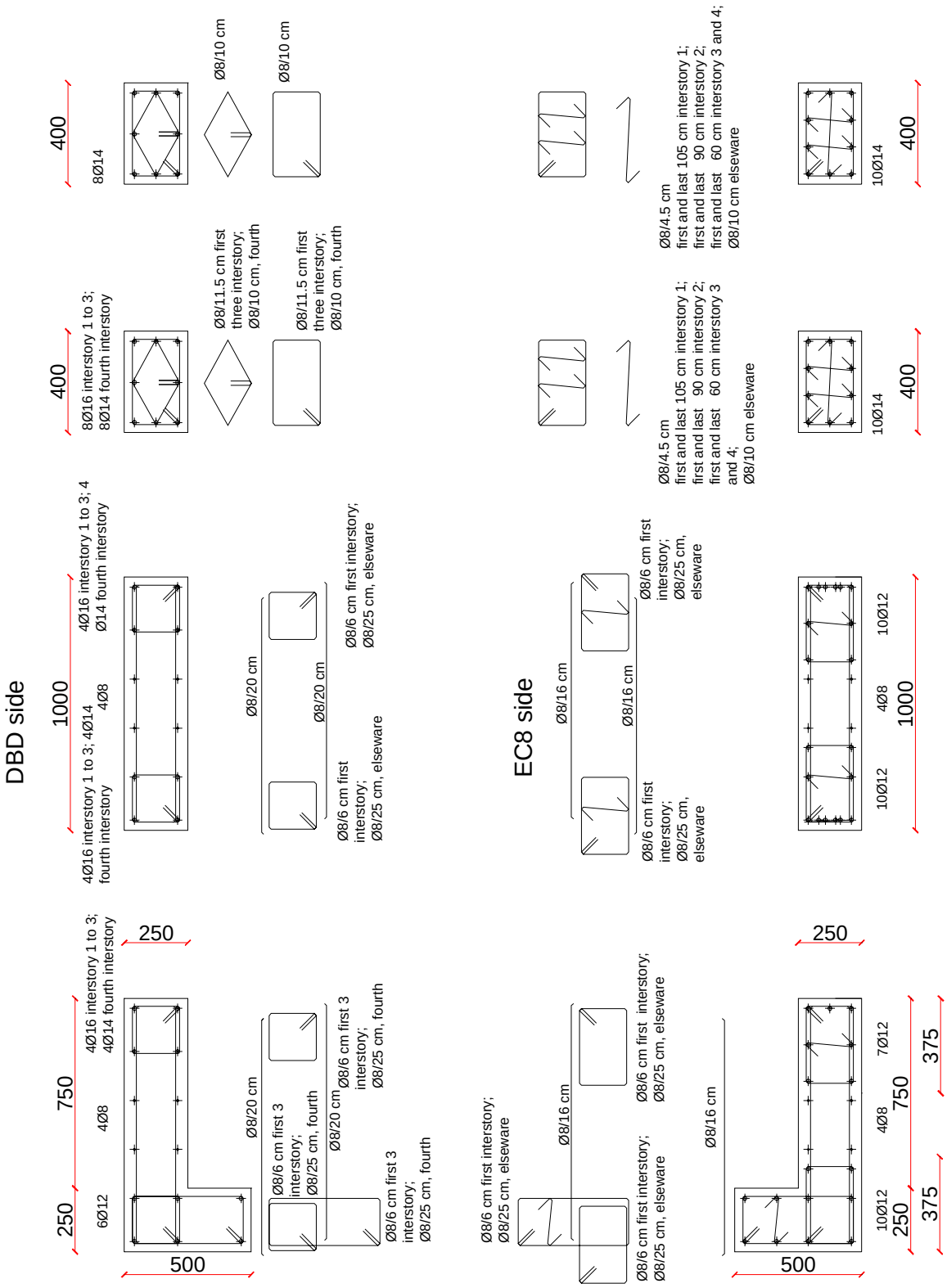

Figure 3. Reinforcement of vertical elements; measure in mm if not otherwise stated.

PSD TESTS D04-D05-D06

The structure was tested pseudodynamically using five accelerograms of increasing PGA: test D02 through D06. In test D01 the free oscillations of the structure where recorded. Table 1 describes the testing sequence. At each floor the same displacement was imposed to both sides of the structure thus the response is that of a double structure: half designed according to the DBD rules and half according to EC8. The torsional motion which would be present in such a real non-symmetric structure was eliminated employing, at each floor, two actuators.

Table 1. Testing sequence.

Test	*Type*	*Design PGA amplification factor*	*PGA [g]*	*Length [s]*
D01	*Free oscillations*			
D02	*Pseudodinamic*	*0.05*	*0.028*	*8sec*
D03	*Pseudodinamic*	*0.10*	*0.056*	*15sec*
D04	*Pseudodinamic*	*0.15*	***0.085***	*4sec*
D05	*Pseudodinamic*	*1.00*	***0.56***	*15sec*
D06	*Pseudodinamic*	*1.50*	***0.85***	*6sec*

After test D06 the structure was repaired and tested again. From the EC8 design point of view (see Fardis [4] for details), test D05 represent the design seismic event corresponding to the local collapse and life-loss prevention limit since the employed signal, which has a PGA equal to 0.56 *g*, has a response spectrum having a plateau of 1 *g*, equal to that of the EC8 design spectrum. Test D04 is representative of a damage limit seismic event since its PGA (0.049 *g*) is 1/5th of the design PGA. Since Test D06 has a PGA equal to 1.5 the design one it represents the seismic event corresponding to the collapse prevention limit. Due to the low value of the PGA, test D04 should stress the structure only in its elastic range and thus allows for computing the structural initial stiffness. Figure 4 displays the time-histories selected for numerically reproducing the PSD testing sequence.

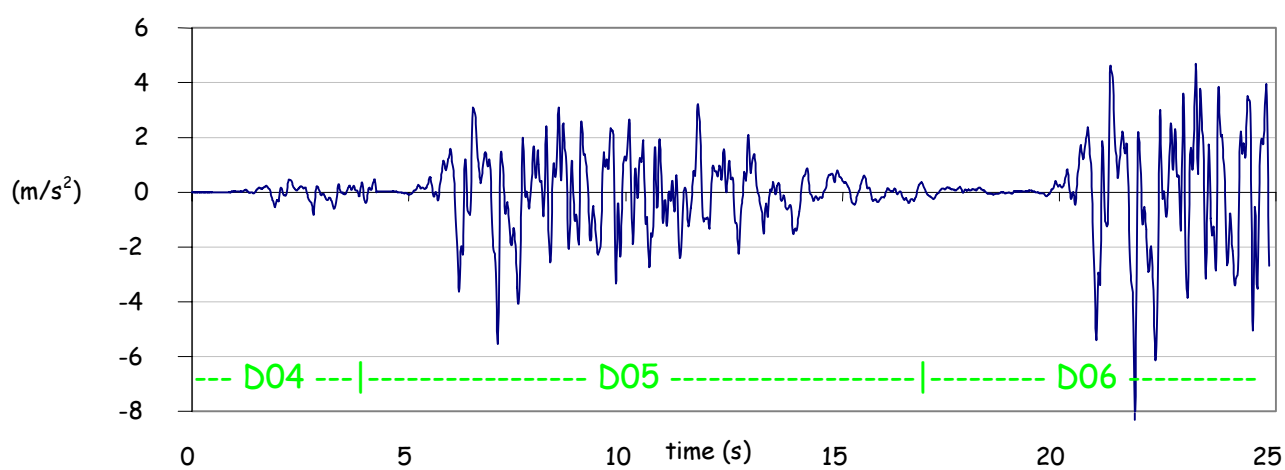

Figure 4. Time-histories for the D04, D05 and D06 accelerograms

NUMERICAL MODELING OF THE PSD TESTS

In order to numerically reproducing the PSD testing sequence, the “dual frame” structure has been modeled using the NONDA computer code (Martinelli et al. [5]). This code allows for the step-by-step numerical integration of the dynamic equilibrium equations and posses a few non linear elements implementing material and geometrical non-linearities.

With the aim to build a model as simple as possible, each single structural element (beams, columns, coupling beams, walls) has been modeled by a single Reinforced Concrete Inelastic Zones (RCIZ) finite element (Martinelli [6].) This element, which pertains to the column fiber element family, was initially developed by the author to model the cyclical response of the end critical zones of bridge piers having low-to-intermediate shear slenderness and accounts for shear flexure interaction. The element is based on Timoshenko beam theory and shear resistance is obtained by modeling the principal shear resisting mechanisms. Shear and flexural behavior are related to each other by means of some suitable kinematics assumptions. To account for the contribution to shear due to arch action in the RCIZ element, differently from standard fiber beam elements, the principal direction of the compressive stress (direction of the fibers) is oriented on the base of the value or the bending moments at the element end sections.
The RCIZ element has been furthermore modified to account for the diagonal inclined bars in one of the coupling beam, while the NONDA code has been modified to allow for the automatic computation of Park and Ang [7] damage index.

For the material strength of the concrete and the steel, as well as the Young modulus of the steel, used in the analyses, the values obtained by testing the materials employed in building the PSD tested specimen were adopted. Due to the at most linear variation of the curvatures along the RCIZ element, having assumed one element per structural element implies that the expected moment distribution due to the earthquake motion in the beams is predominant over that due to the gravitational loads.

Each side of the structure has been modeled in the same way: in Figure 5, the mass distribution adopted in the numerical simulation is shown. The masses represent those of the structure and of the live loads. Since the RCIZ element has axial displacements and a rigid axial constrain wold have affected the flexural response of the beams and the coupling beams, it has not been possible to model the floors as rigid diaphragms. To model the coupling between the two sides of the structure and to simulate the use in the PSD test of two actuators at each floor, which restrained the torsional displacements, in the numerical model the horizontal displacements of the inner walls were constrained and set equal to each other at each floor. Furthermore, only the displacements and rotations in the plane of each frame were retained.

In order to improve the matching with the natural frequencies (see Table 2), and following the results of a previous work (Primi [8]), the vertical element are positioned along the vertical lines passing through the cross-section centroid while the horizontal elements axes are assumed at the height of the concrete slab upper face; leaving thus longer vertical elements at the first interstory.

Table 2. Estimated natural periods.

	Test D05	Numerical
Mode	T (s)	T (s)
1	0.35	0.336
2	0.10	0.094
3	0.05	0.049
4	0.04	0.036

To reproduce the effects of the axial force in the vertical elements, at each node has been applied a vertical force computed using the tributary length of each vertical element and a uniform load of 22 kN/m, 24.4 kN/m, 24.4 kN/m and 24.9 kN/m acting respectively on the horizontal elements for the levels from roof to foundations. These load represents the structural self weight and the added weight, in the form of water filled containers, present at the time of testing.

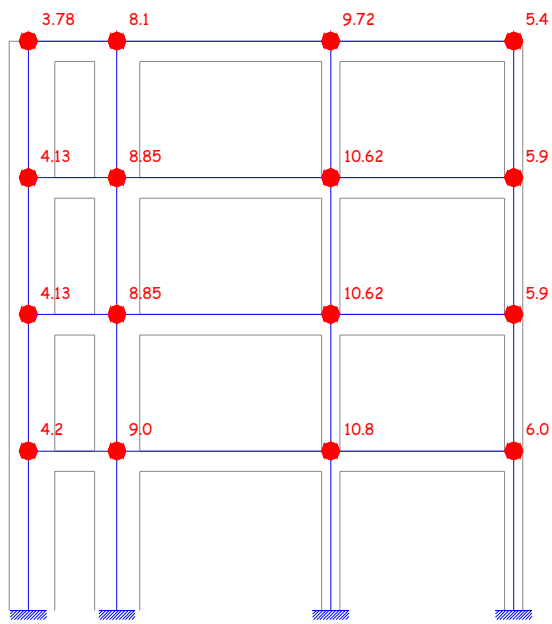

Figure 5. Lumped mass distribution, in kNs^2/m, for each side of the structure.

In modeling the beams cross-section, a slab depth of 328 –250 = 78 mm was assumed as collaborating. This values corresponds to the least among the following, as suggested by Paulay and Priestley [9]: $1/12^{th}$ the beam length, six time the slab height, one half the slab span normal to the beam considered.

Even though the effects or the D04 acceleregram were almost elastic, the accelerograms of Figure 4 have been applied in sequence to the numerical model of the structure to simulate the PSD testing sequence.

COMPARISON OF EXPERIMENTAL AND NUMERICAL RESULTS

The comparison between the experimental results and those numerically computed is based on several aspects. Generally speaking, using just one finite element for each structural element doesn't allow to capture the local behavior with sufficient confidence. It is expected, however a correct representation of the general structural behavior. Give the interest and the importance of the damage indexes, and that many of these are based on a mix of displacement and force measures, the comparison will involve not only deformations at selected points of the structure but also, when available due to the choice of the sensors selected for the experimental tests, forces. As a side effect of the PSD testing technique, the shear forces at each floor are readily available as the forces inside the actuators. Given the presence of one actuator per side, it is possible to know not only the total floor shear but also that resisted by each side. It is not possible, however, to have from the experimental set up the shear resisted by the coupled walls as well as

other internal forces since no provisions were made to directly measure them. However, having validated the numerical model, these quantities can be easily derived.

As a first comparison, Figure 6 presents the floor displacements for the D05 and D06 tests. As usual, the less local measure of displacement represented by the displacement at the roof (Figure 6a) is in much better agreement than that at the first floor. Note, however that the mismatching happens for the global collapse limit seismic event, 1.5 the design one, and mainly at the time of the maximum rupture. Up to that point, and for an interstory drift at the first interstory around 1.5%, the agreement is almost perfect at each floor. A similar picture can be appreciated from the interstory drifts time-histories of Figure 7. Here, at the fourth floor the numerical interstory drift slightly overestimates the experimental one, but it achieves a good matching at the lower floors. The floor shear, depicted in Figure 8 and Figure 9 respectively for the 2nd and the 1st (base) floor, give an equally satisfactory picture. Having assessed the accuracy of the numerical results, it is interesting to note how the walls are effectively resisting the most of the floor shear (having a share of around 70%, as predicted in the design analyses). Finally, Figure 10 presents the readings of the inclinometer located at the fist floor on the external wall of the EC8 side. Since displacements and rotations are in good agreement with the experimental results, it is expected that the damage indexes, such as the Park and Ang one, which relies on these quantities, will give predictions of the structure's state non biased by the error induced by the numerical model. Table 3 presents the values for the Park and Ang damage index D, computed by the NONDA code with a strength degrade parameter $\beta_e = 0.27$.

Table 3. Park and Ang damage index.

Element	Side	Floor	Position	δ_m/δ_u	$\beta_e\int dE/F_y\delta_u$	D
Shear wall	EC8	1	External	0.28	0.64	0.91
Shear wall	EC8	1	Internal	0.25	0.51	0.76
Shear wall	DBD	1	External	0.29	0.65	0.94
Shear wall	DBD	1	Internal	0.26	0.56	0.82
Coupling beam	EC8	2	-	0.67	0.52	1.19
Coupling beam	EC8	1	-	0.71	0.58	1.29
Coupling beam	DBD	2	-	0.65	0.43	1.08
Coupling beam	DBD	1	-	0.63	0.79	1.42

Interestingly enough, the damage index for the shear walls of the DBD side are always slightly greater than those of EC8 one and the top damage is located in the first coupling beam of the DBD side. This also was the damage pattern on the tested structure after the D06 test.

CONCLUSIONS

The obtained results demonstrate as global models of the type describes may be able to reproduce with sufficient precision the response of medium complex structure such as the one described. The use of a single finite element, of the type here briefly recalled, per structural element gives acceptable results when the bending moments induced by the seismic action is prevailing. Proven modeling details such as assuming the beams axes at, or near, the level of the collaborating slab confirm they importance. Finally, the ability of the numerical model to reproduce the structural displacements, coupled with the Park and Ang damage index, allow for the prediction of the damage pattern. Given good performances, the developed numerical model allows for interesting "what if" scenarios.

ACKNOWLEDGMENTS

The author whishes to acknowledge the work of Alessandro Balzarotti (now at TECOM S.r.l.) for the work presented in partial fulfillment of the requirements for his Bachelor degree in Civil Engineering.

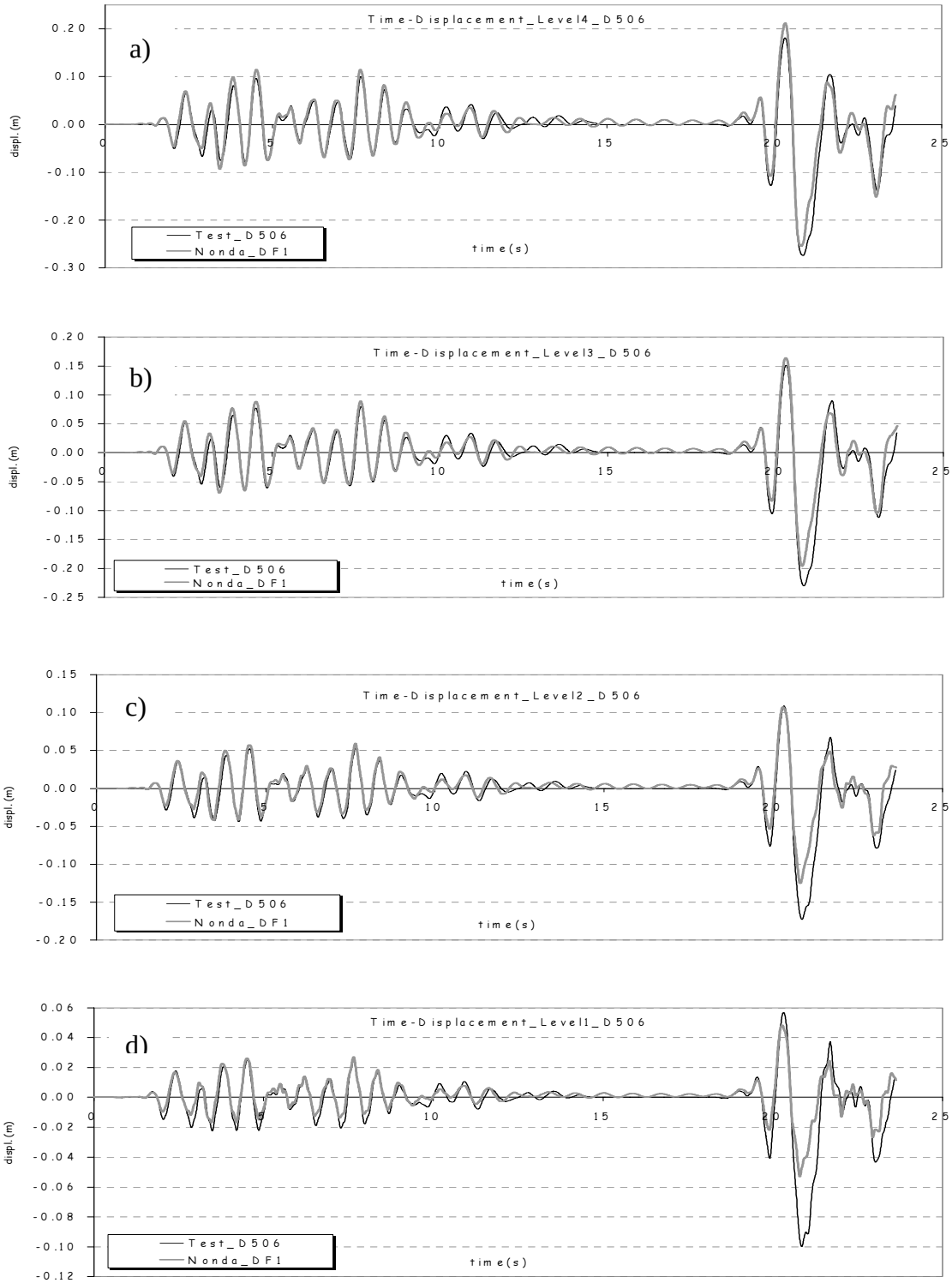

Figure 6. Floor displacements: a) 4th floor, b) 3rd floor, c) 2nd floor, d) 1st floor. Black, PSD test. Grey, numerical simulation.

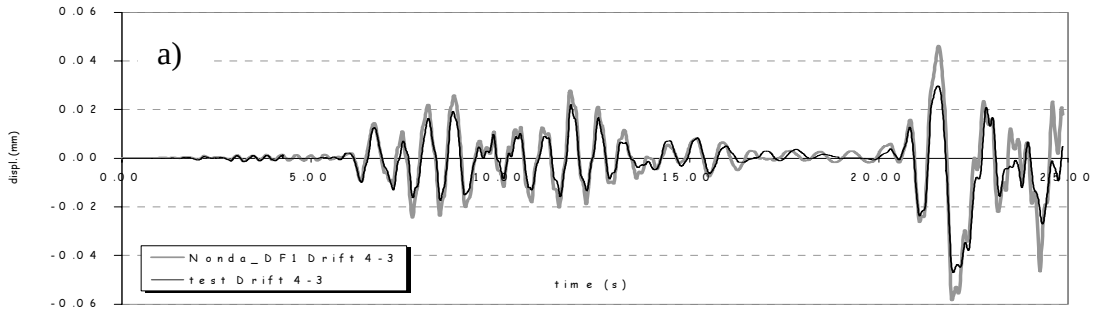

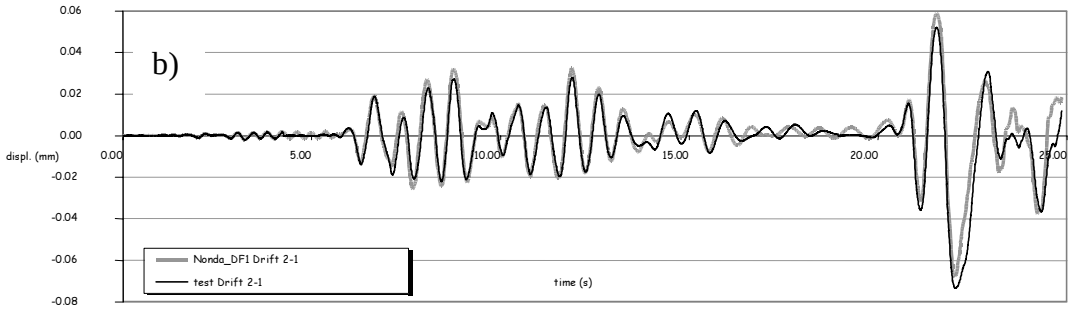

Figure 7. Interstory displacements: a) 4th floor, b) 2nd floor. Black, PSD test. Grey, numerical simulation.

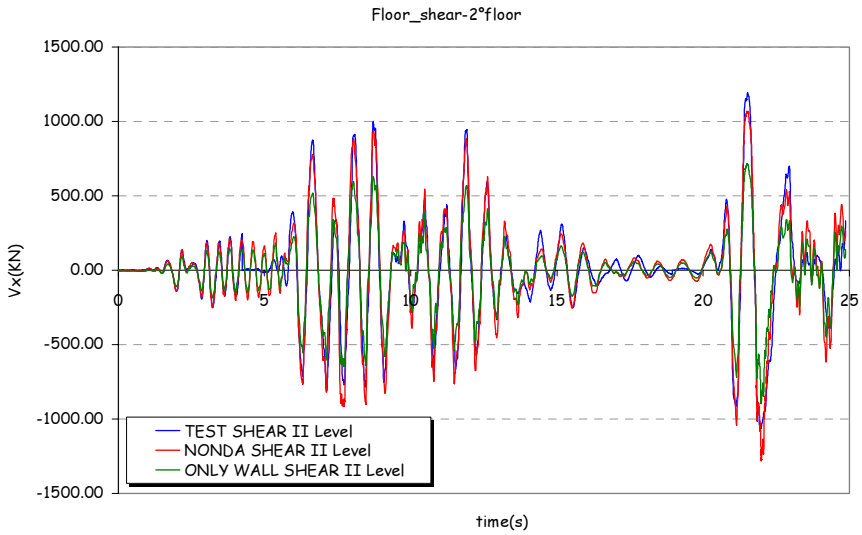

Figure 8. Time-history of the floor shear at the 2nd floor.

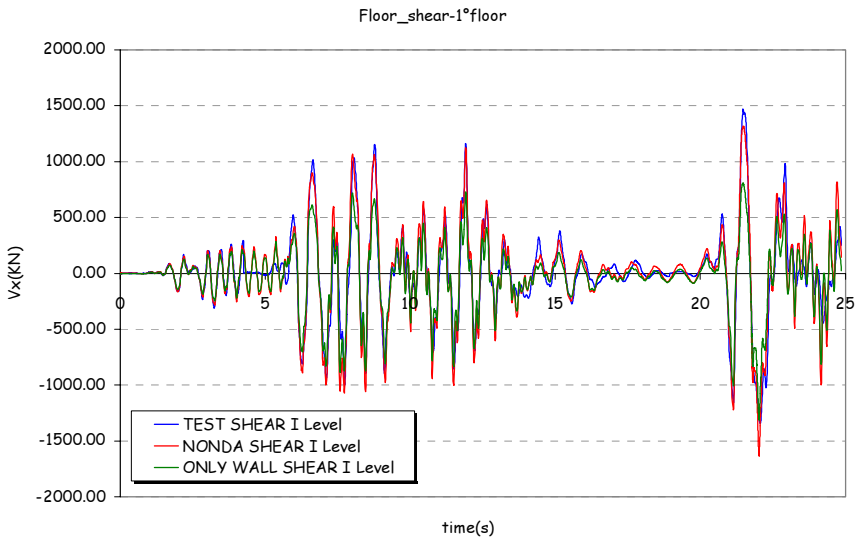

Figure 9. Time-history of the floor shear at the 1st floor.

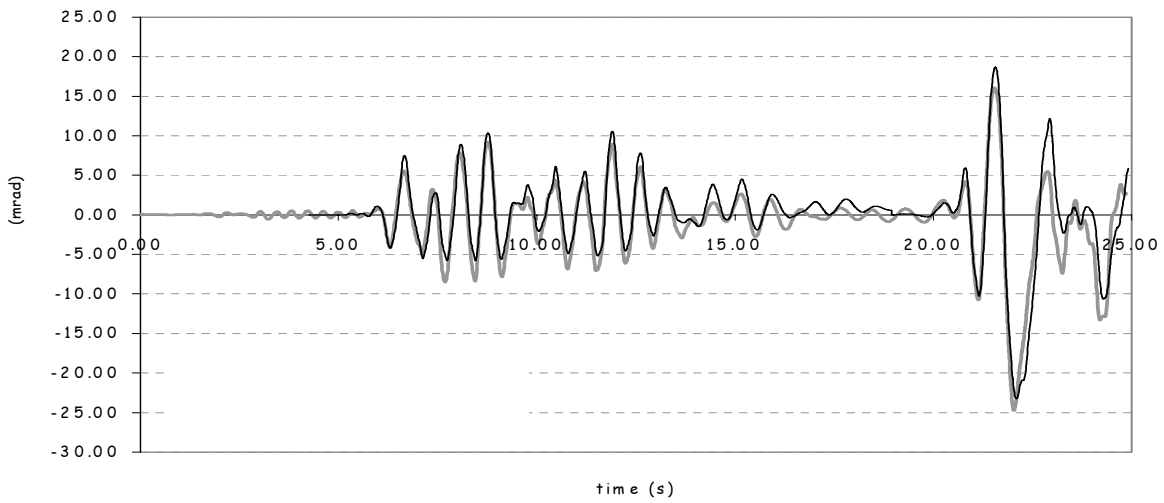

Figure 10. Comparison of the rotation measured by the inclinometer at the 1st floor on the outside wall of the EC8 side. Black, experimental. Grey, numerical simulation.

REFERENCES

1. Colombo A. et. al. "Pseudodynamic response of dual RC structure with different designs". Proceedings of the 12th European Conference on Earthquake Engineering. London, U.K.. Paper no. 297. Elsevier Science Ltd. 2002.

2. Panagiotakos TB, Fardis MN. "A displacement-based seismic design procedure for RC buildings and comparison with EC8". Earthquake Engineering and Structural Dynamics 2001; 30: 1439-23.

3. CEN. “Design provisions for earthquake resistance of structures. Part 1: General rules. Part 1-1: Seismic actions and general requirements for structures; Part 1-2: General rules for buildings; Part 1-3: Specific rules for various materials and elements”. ENV 1998-1-1-, 1-2 and 1-3, Comite Europeen de Normalisation, Brussels, 1994.

4. Fardis MN. “Code developents in earthquake engineering”. Proceedings of the 12th European Conference on Earthquake Engineering. London, U.K.. Paper no. 845. Elsevier Science Ltd. 2002.

5. Martinelli L., Mulas MG, Perotti F. “The seismic response of concentrically braced moment-resisting frames”. Earthquake Engineering and Structural Dynamics 1996; 25: 1275-24.

6. Martinelli L. "The Behavior of Reinforced Concrete Piers Under Strong Seismic Actions". Proceedings of 12th World Conference on Earthquake Engineering. Auckland, New Zealand. Paper no. 1081.

7. Park YJ, Ang AMS. “Mechanistic seismic damage model of reinforced concrete”. Journal of Structural Engineering ASCE 1985; 111(4): 722-17.

8. Primi S. “Modellazione del comportamento sismico di un edificio in C.A. a pareti accoppiate”. Bachelor thesis. Politecnico di Milano. Milano, Italy. 2001 (in Italian).

9. Paulay T, Priestley NJM. “Seismic design of reinforced concrete and masonry buildings”. J Wiley&Sons. 1992.