13th World Conference on Earthquake Engineering
Vancouver, B.C., Canada
August 1-6, 2004
Paper No. 175

SEISMIC DESIGN OF THE BRIDGE OVER THE CHACAO CHANNEL IN CHILE

P.T. Laursen [1] and K. Fuglsang[2]

SUMMARY

This paper discusses selection of the optimal structural system for the proposed bridge, giving due consideration to strong seismic demand. At the same time, importance was given to the other loads originating from wind, current and vehicle loading. It is often found that the optimal structural system for a particular load case opposes that of another load case. The finally adopted bridge concept was a two-main-span continuous suspension bridge supporting the future 4-lane road connection.

The paper is also concerned with the implications of the seismic demand, in terms of special design of specific structural members. It was observed that seismic loading had impact on the pylons and foundations whereas it had only minor impact on the bridge deck and cable structures.

INTRODUCTION

In 1999 the Minesterio de Obras Públicas de Chile (MOP) awarded COWI A/S, as a part of the Icuatro-COWI Joint Venture, the contract to carry out a feasibility study, conceptual design and preparation of tender documents for a concessionaire contract for the bridge across the Chacao channel. The bridge project is currently out for tender. When the concessionaire contract expires the bridge will be handed over to the MOP.

The bridge crosses the Chacao channel which is approximately 2.5 kilometers wide at its narrowest point, and up to 100 meters deep. Only a tiny shoal, Roca Remolinos, situated in the middle of the channel, provides intermediate foothold for the bridge. The environmental conditions in this area are harsh and comprise strong winds, strong currents, and most notably high seismicity. In fact, the largest earthquake ever recorded, the 1960 Great Valdivia Earthquake, occurred near the bridge site with a distance of only 80 kilometers to the fault system.

The bridge will link Route 5 directly across the Chacao channel and replace ferry traffic between the shores. The bridge is designed to carry a total of 4 lanes of traffic. A general design life of 100 years is stipulated.

[1] COWI A/S, Kongens Lyngby, Denmark, e-mail: pln@cowi.dk
[2] COWI A/S, Kongens Lyngby, Denmark, e-mail: kf@cowi.dk

The analyses and results presented here were based on detailed investigations of the Chacao Bridge [1]. COWI's previous detailed design experience with suspension bridges, notably, Great Belt East Bridge, Denmark (1624 m main span) and Höga Kusten, Sweden (1210 m main span) played a significant role in the design.

BRIDGE SITE

The bridge site is illustrated in Fig. 1 with the Pacific Ocean on the left hand side and the Golf of Ancud on the right hand side. Fig. 2 indicates the floor profile of the channel determined in the bathymetric studies. Roca Remolinos seen in the middle of the figure is exposed only during low tides. The northern branch of the canal (continental side) reaches a depth of 100 m and the southern branch reaches a depth of 80 m (Chiloe Island side)

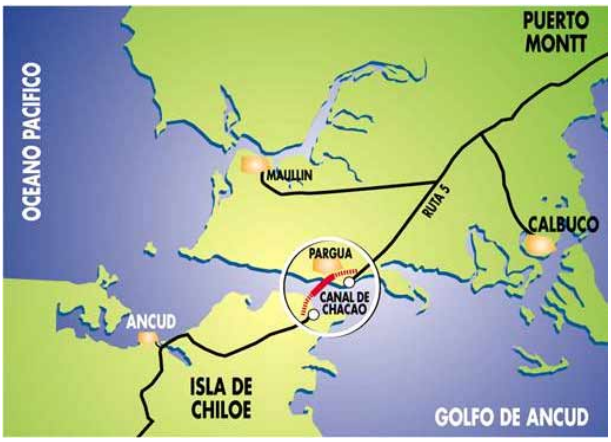

Figure 1-Bridge location

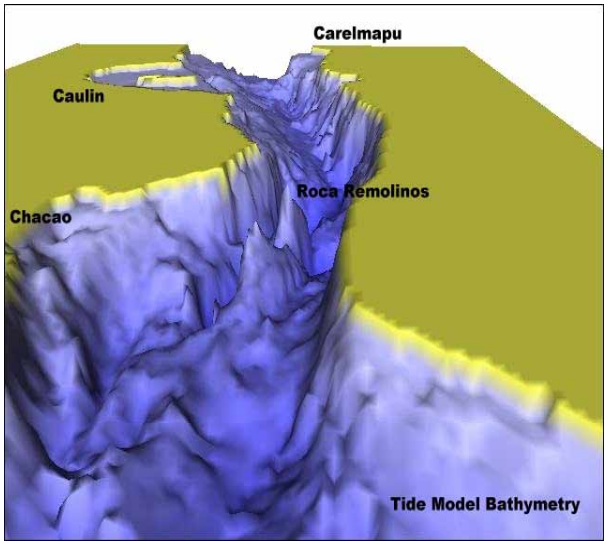

Figure 2-Chacao Channel bathymetry

Seismic Sources

Seismic loading was of major concern for the bridge design because of the proximity of the site to the tectonic plate boundary between the NAZCA and South American plates. Various seismic sources were considered:

1. Inter-plate fault rupture
2. Intro-plate fault rupture
3. Volcanic activity

Strong seismic activity due to inter-plate fault rupture was experienced in the Valdivia earthquake of May 22, 1960. The earthquake was assigned a moment magnitude of $M_w = 9.5$ and was described as 'Probably the largest earthquake ever recorded' [2]. It was caused by subduction thrust-type faulting. Similar earthquakes have occurred in the area and suggest an empirical return period for these events of approximately 400 years. The bridge site is located approximately 200 km from Valdivia but significantly closer to the nearest point of the 900 to 1000 km long fault. This type of event can be described as a far field event.

Shallow crustal earthquakes attributed to intro-plate faulting were also considered. These earthquakes are expected to attain lower magnitudes than the inter-plate ones. Nevertheless, the shaking intensity at the bridge site due to a near field event can be significant.

The potential activity of the Gulf of Ancud Fault (FGA) running along the Chacao channel directly under the bridge site was considered. It was estimated that rupture of FGA could result in a permanent offset across the fault of 1.2 m in the horizontal direction and 1.2 m in the vertical direction.

Hazard due to volcanic activity was also considered. It was found that the seismic risk from this source was inferior to that of the fault rupture scenarios.

Tsunami loading as a consequence of fault rupture was determined for wave crest height of up to 7 m and current speed of up to 8 m/s.

Characterization of Seismic Motions at Site
Two seismic limit states were considered:

1. FEE - functional evaluation earthquake (150 year return period)
2. SEE - safety evaluation earthquake (950 year return period)

The return periods for these limit states were based on events with 50% and 10% probability of being exceeded during the life of the bridge.

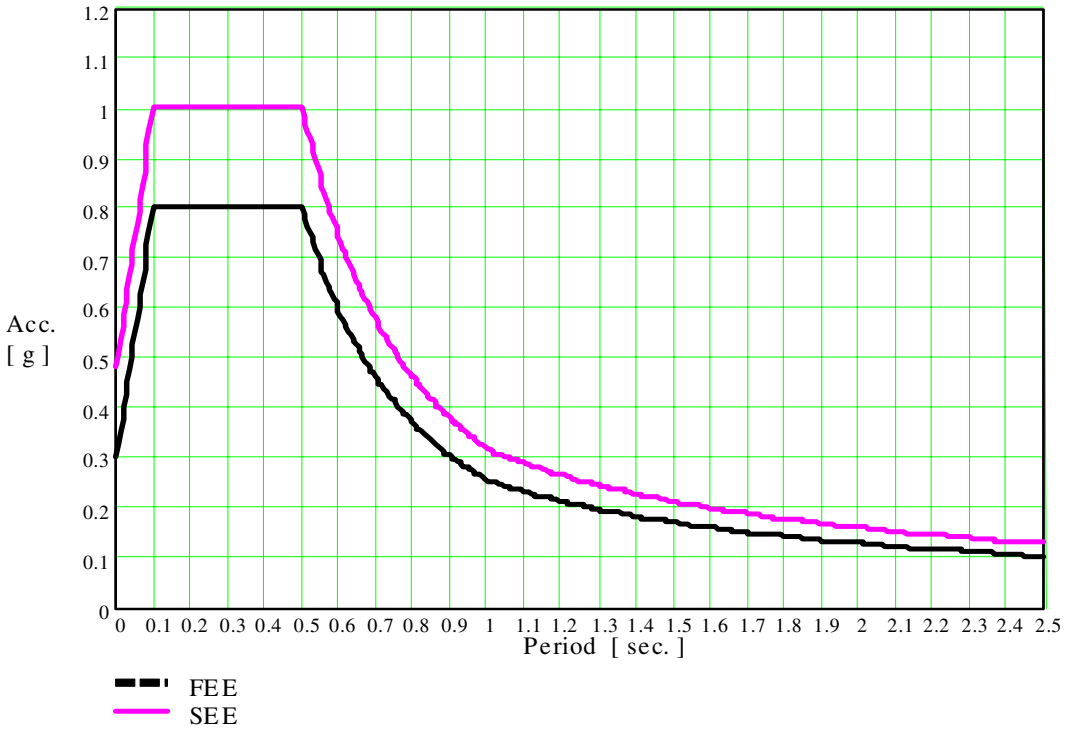

Figure 3-Acceleration response spectra, FEE and SEE, 2% damping

Fig. 3 shows the seismic response spectra associated with the FEE and SEE events. Each curve represents the envelope of two response spectra derived for the subductive and crustal events, respectively. It was found that the subductive event (like the Great Valdivia Earthquake) was likely to produce highest

acceleration in the short period range for up to 0.4 sec. and the crustal (rupture of the FGA fault) likely to produce highest acceleration for periods above 0.4 sec. A minimum acceleration of 0.01g is stipulated. The relatively low damping ratio of 2% was determined as a weighted average of the low damping expected in the steel deck and cable structures and the higher damping offered by the concrete pylons and foundations.

Artificial acceleration time-histories were generated for time-history analysis. Special care was taken to assure correct long period content in the records because of significant long period modal response of long span suspension bridges. The time-history response of a very flexible structure is rather sensitive to backscattered waves that follow the primary body and surface waves. Records for both subductive and crustal earthquakes were developed.

Other Environmental Loads

Strong winds attain speeds of 43 m/s (10 min mean, 100 year return period) at the bridge deck level. Strong tidal currents occur. The design current speed was taken as 5 m/s. Wave loading with wave height of up to 4.7 m was also considered. Ship impact force was taken as 167 MN for a loaded 15,000 DWT design vessel.

BRIDGE CONCEPTS

Several bridge alternatives were initially considered. Amongst these, four are discussed and presented in Figs. 4 to 7. The alternatives were based on slightly different alignments.

The initial study suggested a bridge consisting of two consecutive suspension bridges sharing a central pylon structure. This solution is shown in Fig. 4. The suspension cables for each main span are independent and require anchorage on shore and at Roca Remolinos.

A single main-span suspension bridge was also proposed as shown in Fig. 5. The span proposed was 2240 m long, a world record. This solution required a wider bridge deck than necessary for 4 lanes of traffic in order to ensure aerodynamic stability for the severe wind conditions.

A two main-span cable stay bridge was also studied. Placing the end pylons into deeper zones of the channel, the span lengths were sufficiently shortened to fit a cable-stayed solution of 850 and 1100 m span length, as shown in Fig. 6. In order to achieve global rigidity it was necessary to adopt a relatively rigid central pylon and flexible external pylons and a wider main deck. The 1100 m main-span would be a world record.

Description of the Selected Bridge Concept

Fig. 7 shows the finally selected bridge concept. It is a two main-span continuous suspension bridge. The suspension cables are continuous from anchor block to anchor block, across the three pylons. Both anchorages were gravity based structures buried in the ground. The main cables have a span-to-depth ratio of 9:1. It was sought to make the two main-spans as identical as possible to minimize the size of the main cable, to reduce unbalanced load, as well as to create a harmonious bridge. This resulted in placing both the north and south pylon foundations in the channel.

The A-shaped central pylon provides longitudinal rigidity to the main cable, otherwise vertical deformations of the cable and deck would have been unacceptably large. The rigid pylon leads to the transfer of large longitudinal forces between the main cable and the pylon top, a load transfer that does not apply for conventional suspension bridges.

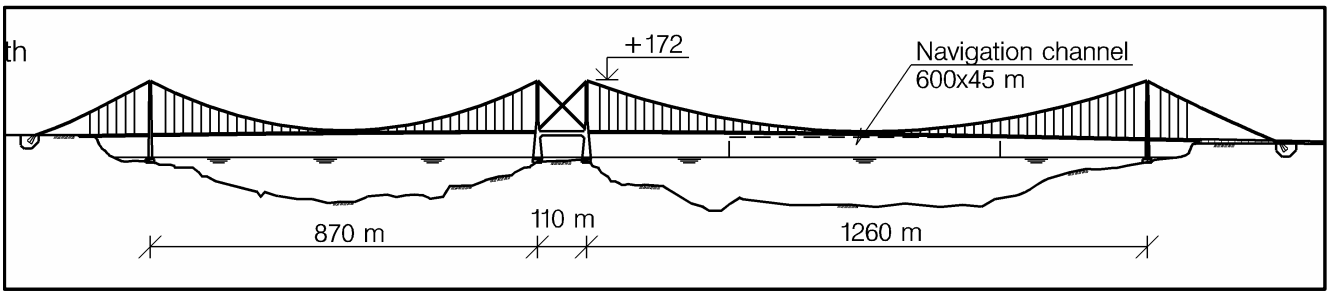

Figure 4-Two consecutive suspension bridges

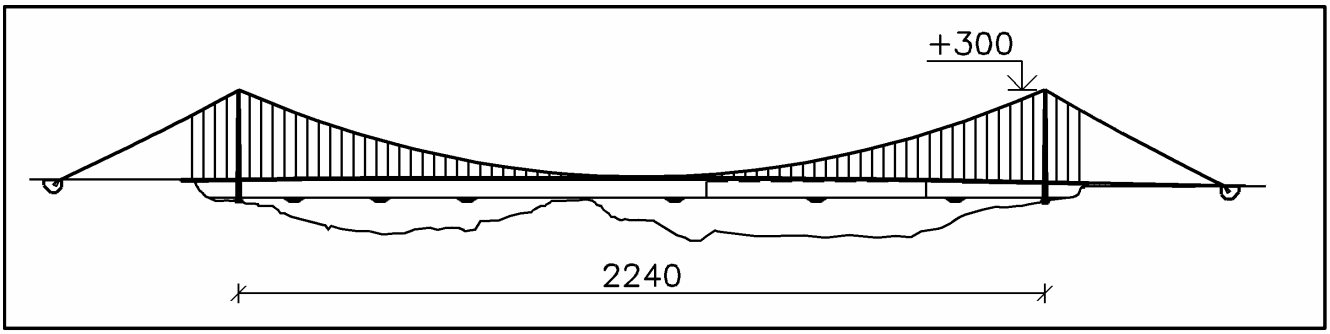

Figure 5-Single-main-span suspension bridge

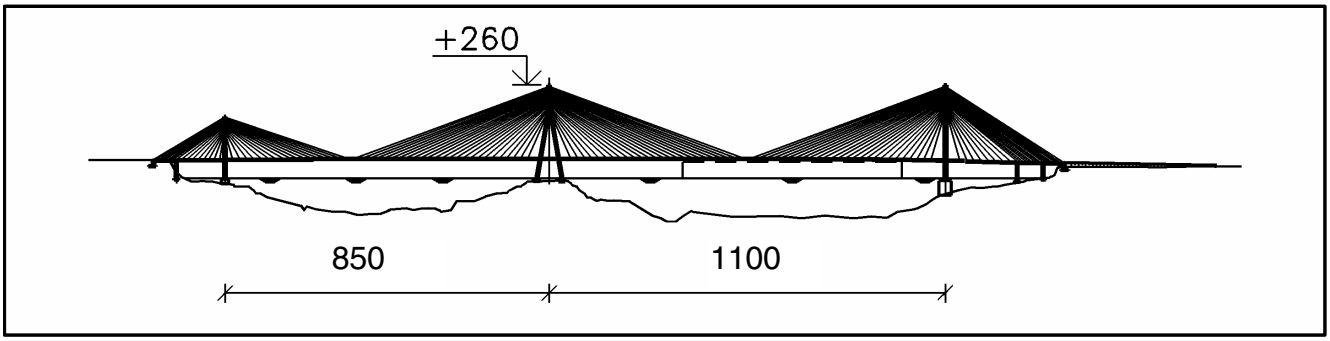

Figure 6-Continuous two-main-span cable stayed bridge

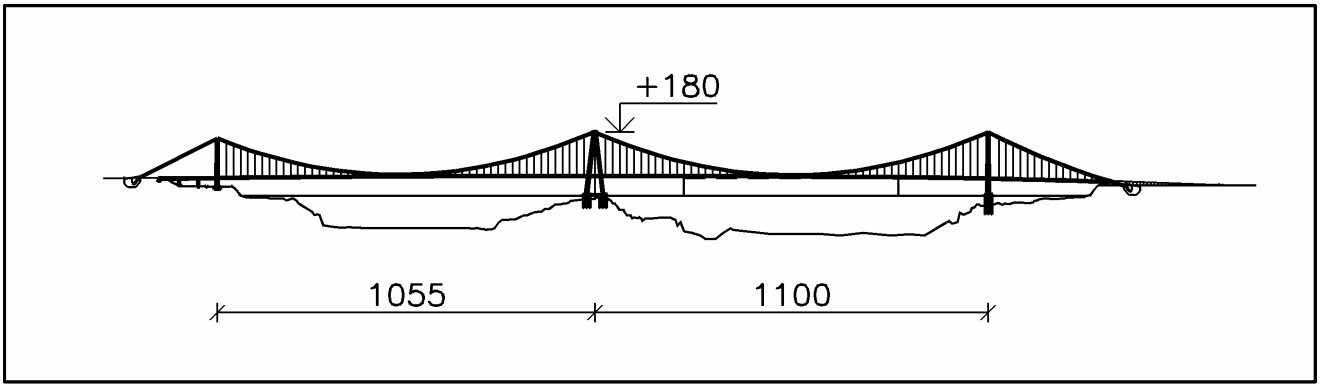

Figure 7-Two-main-span continuous suspension bridge

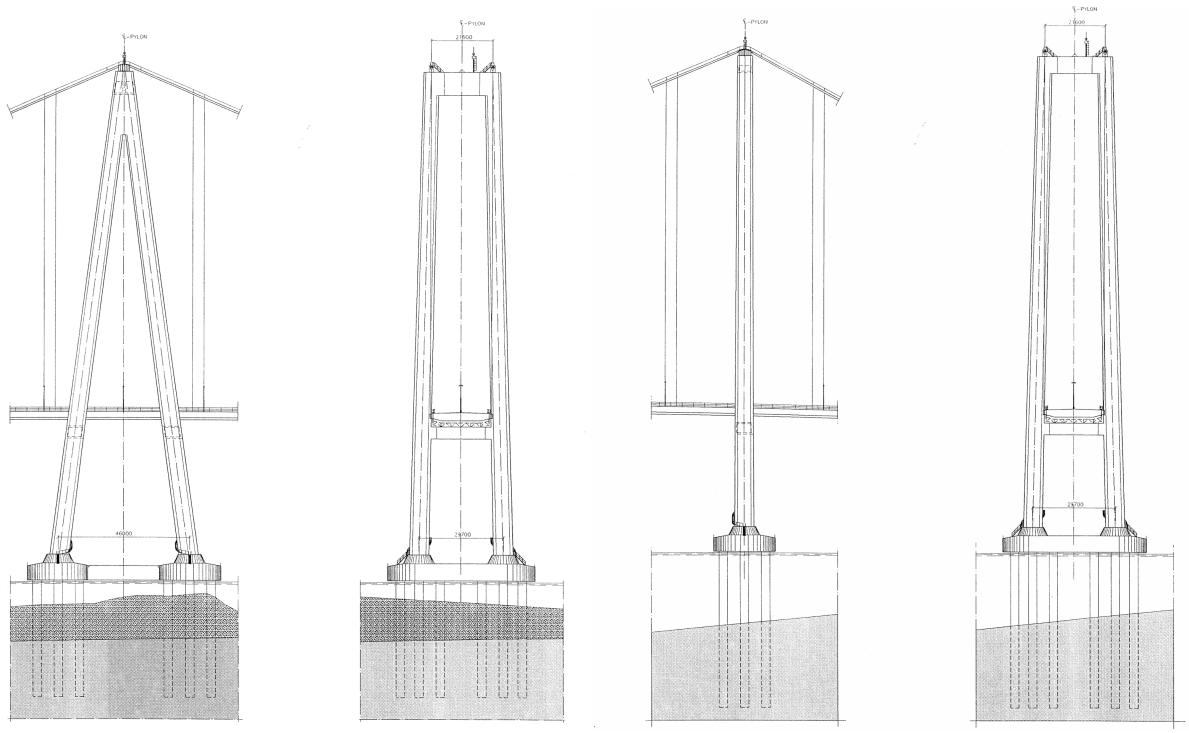

Figure 8- *Central Pylon* *North Pylon*

The two other pylons are traditional pendulum structures. By placing the north pylon at 25 m water depth it was achieved that the two main spans only differ slightly in length, the 1055 m long south span being slightly shorter than the 1100 m long north span. In order to ensure balance of permanent longitudinal loads on the central pylon, the cable curves were mirrored about the central pylon axis. This is why the south pylon is somewhat shorter than the two other. Central and north pylons are shown in Fig. 8.

The bridge is laid out with two expansion joints, one at the north abutment, the other at the south pylon, thus the bridge deck is continuous between these two points. At mid spans central locks are interconnecting the main cables and the bridge deck. At the north expansion joint hydraulic buffers can transfer longitudinal loads between the bridge deck and the abutment. The combination of central locks and the hydraulic buffers gives a relatively rigid suspended system, which is found beneficial both with regard to minimizing live load deflection from traffic, and enhancing the wind stability. The internal restraint of the bridge deck being 'squeezed' between the central locks does not lead to unacceptable stresses, neither of the bridge deck nor of the cables, since the main cables are relatively soft due to the curvature.

The main function of the buffer is to limit the movements of the two main expansion joints to +/- 1000 mm. In case of overloading of the buffer caused during an extreme earthquake, the device will fail at a predefined maximum load. Thereafter will the bridge deck be able to move freely relative to the abutment, avoiding that excessive longitudinal forces are transferred from the abutment through the bridge deck and central locks via the cables to the pylons.

The bridge deck is supported vertically and laterally at the north abutment and at the south pylon legs. It floats in between the pylon legs at the north pylon and the central pylon, with no vertical supports on the cross beams. At these pylons only lateral supports (wind bearings) of the deck are provided. The adopted deck level allows a free navigation clearance of 50 m under the north span. The deck cross section is shown in Fig. 9.

At the south end it was determined that it would be too costly to extend the steel deck and suspend it above land. Instead a conventional concrete bridge is provided here. The approach bridge is monolithically connected with the south pylon, vertically supported on two intermediate piers and at the south abutment, where a normal size expansion joint is provided. Due to the heavy weight of the structure transverse shear locks are required between superstructure and substructure, in order to transfer the transverse loads in case of earthquake.

While all of the above bridge concepts were regarded as structurally feasible, the estimated construction cost varied considerably. A comparative study determined that the cost of the two consecutive suspension bridge solution would be similar to the selected concept, but that the single suspension bridge and the cable stay bridge solutions were 75-80% and 30-35% higher, respectively, than the cost of the selected concept. The selected solution was preferred to the two consecutive suspension bridge solution because of shorter span, improved deck stability and a simplified central pylon. The A-shaped central pylon also permitted shorter distance between the pylon legs which was preferable for foundation on Roca Remolinos.

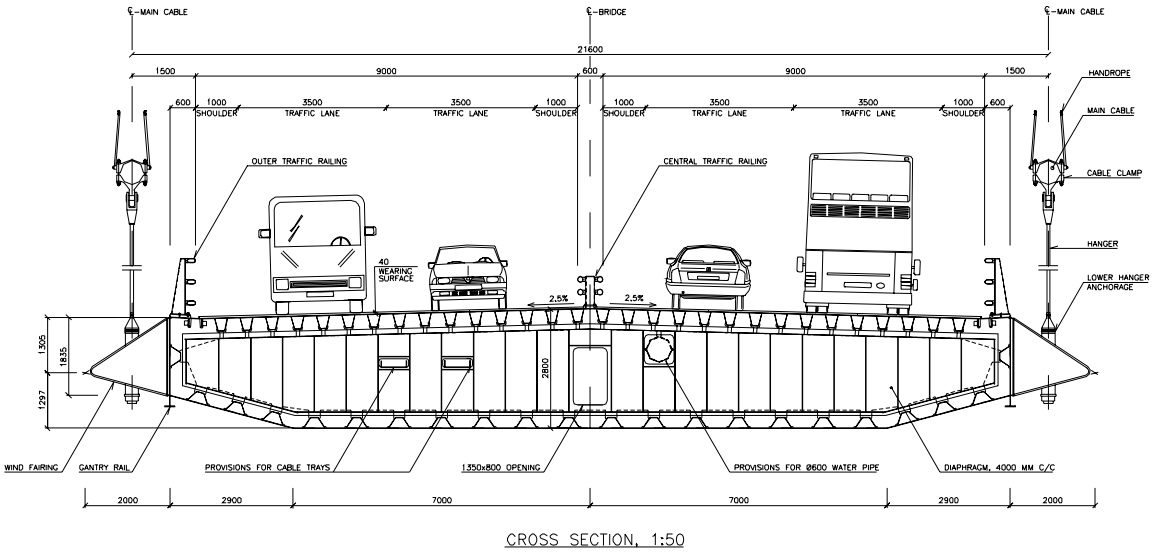

Figure 9-Bridge deck cross section

SEISIMC ISSUES

Many seismic issues arose at the conceptual stage, most importantly:

- Can the bridge be designed to resist the large earthquake forces?
- Can Roca Remolinos, the shallow shoal in the middle of the canal, support a bridge pylon and can this foundation be made in the adverse marine environment?
- Are full height concrete pylons feasible, or should the upper part be made of steel in order to reduce earthquake loads?
- Are free standing concrete pylons during construction more critical than when bridge is completed?
- Will placement of the pylons on the embankments increase seismic vulnerability?

- Will a bridge girder longitudinally fixed to the main cable at mid-span cause excessive loading during earth an earthquake?
- Will special devices such as shock absorbers and lead-core bearings be required in order to minimize the seismic loading?
- Anchor blocks placed on shore will be buried in the glacial moraine layer. Horizontal resistance will be secured mainly by friction against the ground. Will vertical acceleration of the anchor block during an earthquake affect the design?
- What is the additional cost due to seismic strengthening?
- Will seismic load govern design of most structural elements?

All of these issues were resolved. A brief description of the main results is found in the following.

DESIGN OF STRUCTURAL COMPONENTS / SEISMIC IMPACT

Seismic Analysis and Design

Seismic analyses were carried out by means of response spectrum analysis and time-history analysis. Seismic design loads were taken as the maximum from the two analysis types.

Time history analyses revealed somewhat larger seismic effects than found with the spectrum analyses, particularly for the pylon legs. This is unusual because response spectrum analysis normally is considered conservative compared to time-history analysis. In this case, however, the time histories were generated to reflect a damage potential taking into account more precisely the specific local seismic conditions.

The structure was designed to AASTHO LRFD. Governing limit state is generally the ultimate limit state, where the Strength Limit State represents load combinations with primary loads of traffic and wind, and the Extreme Event Limit State represents load combinations with primary loads of SEE earthquake and ship impact.

Pylons

The offshore foundations for the north and central pylons consist of large diameter bored piles supporting the pile caps, whereas the onshore south pylon has a spread footing foundation.

Straight pylon legs without any kinks were preferred both structurally and aesthetically, with a minimum space between the pylon leg and bridge deck.

The design of the pylons was to a great extent influenced by seismic design considerations. Special precautions were taken for the pylon design to ensure that loads from earthquakes could be accommodated.

Being in a seismic region it is desirable to reduce mass. It was initially discussed whether to use steel or concrete for the pylons. It was however found that concrete pylons were feasible for the bridge despite higher weight in comparison with steel pylons. In order to reduce weight, the pylons were designed with slender legs and relatively thin walls. A quasi-circular cross section was adopted for the pylon legs instead of a conventional polygonal shaped. Construction of the quasi-circular cross section adds complication compared to conventional shapes as form work and reinforcement must be curved.

It is important that structures in seismic areas are ductile and that it is controlled, where yielding of cross sections will occur. To ensure ductility of the pylons, reinforcement bars with large ductility is required in

the pylon legs. Reinforcement with minimum rupture strain of 14 % was specified. The quasi-circular shape will also be favorable with regards to concrete confinement.

A minimum number of cross beams interconnecting the pylon legs were chosen primarily in order to minimize construction time. While multiple cross beams are advantageous for energy dissipation by means of plastic hinging, they at the same time increase the rigidity of structure which tends to increase the seismic effects. Thus it was considered preferable to minimize the number of cross beams.

The cross sections are relatively small compared to the pylon leg dimensions. Forming of plastic hinges (yielding) in the pylon frame will consequently first occur in cross beams and ultimately in the bottom and top section of the pylon leg. Plastic hinges are not developed initially in the critical and stability affected vertical members.

Push-over analyses demonstrated that the central pylon is able to accommodate displacements of up to 3 times the elastic displacements calculated for the Safety Evaluation Earthquake. Higher ductility is expected for the north and south pylons.

The hoop reinforcement placed in both the inner and outer faces of the pylon legs in combination with links ensures confinement of the concrete and prevents buckling of the vertical reinforcement. In the plastic hinge zones at top and bottom of the pylon legs and in the end sections of the cross beams, additional confinement reinforcement is provided to ensure ductility during seismic events.

It was found that seismic loads generally governed the design of the lower part of the pylon frames.

North Pylon

The North Pylon is a conventional pendulum pylon, as shown in Fig 8. Founding the pylon in 25 m deep water was found not to lead to significantly higher seismic vulnerability in comparison to pylons founded on the shores.

In total 16 Nos. of 3 m diameter bored piles support the pile cap. The maximum vertical bearing capacity per pile is about 50 MN. The governing load case for bearing is wind in combination with traffic. The severe and governing load case for bending in the piles is the ship collision (horizontal load 167 MN). Due to the flexibility of piles, the seismic horizontal forces are small. The pile cap was governed by wind in combination with traffic.

Transverse earthquake loading (Extreme Event Limit State) generally governed the pylon leg design. In the bottom section of the leg the largest bending moment determined for the Safety Evaluation Earthquake of 400 MNm was 80 % larger than the maximum bending moment of 220 MNm found for Strength Limit State. A longitudinal reinforcement ratio of 2.4% was required in the bottom section of the pylon leg to carry the large earthquake loads. Due to the large bending moments from earthquake load, the utilization ratio is in Strength Limit State relatively low, approximately 0.60, whereas the ratio for seismic load is 1.0. Maximum bending moment obtained in the bottom section of the pylon leg for the free standing pylon during construction was approximately 220 MNm in combination with compression forces of approximately 60 MN. This was less critical than the design forces obtained for the SEE event.

The maximum compression force in the pylon legs is approximately 220 MN, equivalent to stresses of about 16 MPa in combination with bending moments up to 210 MNm. The longitudinal reinforcement ratio in the pylon legs was varied between 2.4 % in the bottom section and 1.6 % in the upper part of the legs.

Two cross beams were required in the north pylon, one below the bridge deck and one at the top of the pylon. The cross beams were purposely designed after the strong column-weak beam principle to ensure that plastic hinges will form in the cross beam during an extreme seismic event. Longitudinal post-tensioning was provided in both cross beams. The cross beams were governed by bending moment as part of the transverse frame action. Largest bending moments were approximately 160 MNm due to wind load (Strength Limit State). Bending moments in Extreme Event Limit State due to earthquake loading (120 MNm) were smaller than for Strength Limit State. The longitudinal reinforcement ratio required to carry the bending moments was about 1.9%.

Central Pylon

Detailed geotechnical analyses showed that Roca Remolinos would provide a satisfactory base for the central pylon. It was critical to limit the size of the foundations to avoid founding too close to the steep embankments of the tiny shoal. This was achieved by selecting the A-shaped pylon layout with relatively steep inclination of the legs.

In total 32 Nos. of 3 m diameter bored piles supports the pile cap with 8 piles situated under each pylon leg. The pile tip level was -40 m and the free length between seabed and pile cap was about 9.0 m for all piles to ensure flexibility and uniform pile constraint. Seismic loading did not govern the piles. The piles were subject to vertical loads in the same order of magnitude as the piles for the north pylon, i.e. up to 46 MN. The maximum tension axial force in the strength limit state was 11 MN, with a bending moment of 22 MNm. Pile bending due to ship collision did not govern. The pile cap tie-beams were subject to large tension forces, up to 23 MN in Serviceability Limit State. Longitudinal post-tensioning was provided to maintain the tie beams crack free.

The pylon legs were subjected to the similar transverse actions as the north pylon legs. For longitudinal action the A-frame pylon works as a relatively rigid structure due to its triangulated geometry. The legs were found to be subjected to large compression and tension loads, mainly due to traffic load in one main span and due to longitudinal seismic action which in addition created large bending moments in the pylon legs. In addition, the inclination of the legs causes bending moments.

For longitudinal action the compression load in the bottom section of the leg was about 250 MN in Strength Limit State. In the opposite leg a tension force of 72 MN in the top of pylon leg caused cracking and required a rather high amount of axial reinforcement (3 %). Axial forces from earthquake load are smaller when comparing to Strength Limit State. A maximum compression in the Extreme Event State was approximately 120 MN and no tension occurred. Bending moment in the lower part of the pylon frame was largest for earthquake loading. A governing design moment of about 450 MNm was found in the bottom section of the leg.

A longitudinal reinforcement ratio of 2.5% was required in the bottom section of the leg resulting in utilization ratios in the Extreme Event Limit State and Strength Limit State of 1.0 and 0.7, respectively. In the upper part of the pylon leg a longitudinal reinforcement ratio of 3.0% was required resulting in utilization ratios of 0.8 in the Extreme Event Limit State and 1.0 in Strength Limit State. The longitudinal reinforcement ratio in the pylon leg varied between 1.5% and 3%.

Push-over analyses revealed, even though the structure is geometrically rigid, that there are ductility reserves available to resist seismic loading. The main contributor to the ductility is the tension elongation of the leg in case of longitudinal seismic action. A load reduction factor (R-factors) of 1.5 could in principle be used for design, but an R-factor of 1.0 was conservatively assumed in the verification.

The concept with no longitudinal bracing between the legs of the A-pylon and steep leg inclination (1:7.5) contributes to the favorable ductile behavior. A large safety is required by AASHTO for seismic loads (a strength reduction factor of 0.5 applies to the axial compression strength) causing the pylon legs to remain more or less elastic for the SEE event.

Cross beams are provided at two levels. Transverse frame action is in principle similar to that of the north pylon. However, the upper cross beam will carry bending from both pylon frames of the A-pylon. Therefore the upper cross beam height of 6.8 m was chosen. The lower cross beam is partially post-tensioned whereas no post-tensioning is provided in the upper cross beam. The longitudinal reinforcement ratio in the lower and upper cross beams are 2.2% and 1.8%, respectively.

Traffic loading of one main span only created a large shear forces in the pylon top below the saddle due to differential cable load of 34 MN. In order to transfer the shear from the pylon saddle to the legs, post-tensioning bars were provided for effective clamping between the pylon saddles and pylon top. A total of 40 post-tensioning vertical bars with 50 mm diameter are provided for each saddle.

South Pylon

The pylon legs are founded directly on spread footings. The peak ground stress is below 1.1 MPa in the most severe load combination which is longitudinal earthquake. The reinforcement in the spread footing is rather moderate due to the direct force flow.

Similar to the other pylons, earthquake loads govern the cross section design in the lower part of the pylon. This pylon is stiffer than the other ones and attracts higher seismic load. Furthermore, the monolithic integration with the approach bridge deck, will increase the bending moment in the lower part of the pylon legs for longitudinal seismic action. The longitudinal reinforcement ratio required in the lower part is about 2.5 % whereas approximately 1.6 % is sufficient in the remaining part.

The lower cross beam is monolithically integrated with the approach bridge deck. Similar to the Central Pylon, only the lower cross beam is post-tensioned. The reinforcement ratios of the cross beams are 2.0% for lower cross beam and 1.9% for the upper cross beam.

Anchor Blocks

The main cables for the suspension bridge are anchored in concrete anchor blocks located on each side of the Chacao Channel. The main cable load (Strength Limit State) to be anchored is approximately 180 MN for each cable.

Both anchor blocks are of the gravity type. Both anchor blocks are located at a safe minimum distance from the coastline and are founded in moraine sandy deposits with a high friction angle of 40 deg. The weight of the anchor blocks is approximately 500 MN and maximum vertical stress below the anchor blocks is about 0.6 MPa. The bottom part of the anchor block massive is inclined approximately corresponding to the inclination of the main cable in the splay chamber in order to obtain the largest possible resistance against sliding.

A verification of the sliding resistance of the anchor blocks has been carried out in both Strength Limit State and Extreme Event Limit State. Large safety factors are required due to the general uncertainty and high dependency on geotechnical data. The design requirements were a safety factor of approximately 1.7 for the Strength Limit State and 2.5 for the Extreme Event Limit State (SEE). Total safety is approximately 4.8 in Strength Limit State and 3.8 in Extreme Event Limit State. Seismic loading did thus not govern design of the anchor blocks.

Displacement of the anchor block during for the SEE earthquake was evaluated to 100-150 mm for both anchor blocks.

Cables

Galvanized 5.22 mm wire with breaking strength of 1570 MPa is specified. This is the most commonly used material strength for suspension bridge cables. The wires are arranged in 19 bundles (strands), each comprising 480 wires, i.e. a total of 9120 wires per cable with a steel area of 0.195 m². The construction method assumed is air spinning.

The maximum load in the main cable that will occur at the pylon saddles is 181.3 MN (Strength-I), equivalent to an average tensile stress of 930 MPa. In the verification, it was taken into account that bending of the cable will cause the stresses to be unevenly distributed.

The hangers are of the locked coil cable type with 1570 MPa tensile strength. The typical hanger spacing along bridge is 20 m and results in rather moderate axial load in the hanger (about 2.7 MN in Strength - I). One hanger strand per support is generally specified. A closer hanger spacing is used near the pylons. Two different diameters of the hanger strands were specified (75 mm and 90 mm).

All cable structures received only small effects during the extreme earthquake event, typically increasing the stresses by a few percent in comparison to permanent load stress. Overload and risk of cable slip is therefore not likely. Nevertheless, a blocking devices clamped around the main cable on both sides of the central pylon saddle may be needed to resist seismic actions.

Bridge Deck

It was aimed to design the bridge deck as light as practically possible, in order to minimize structural steel quantities, and consequently reduce the main cable and pylon quantities. Weight optimization was particularly important for this bridge located in a highly seismic region. A total bridge deck steel quantity of 380 kg per m² of deck top surface was achieved. The cross section is shown in Fig. 9.

A rather shallow box was adopted because the limited length suspended span of 1100 m made the structural system wind stability rather insensitive to the bridge deck stiffness. As expected, the weight saving exercise reduced the stiffness of the bridge deck. Yet, the stiffness and strength were deemed more than sufficient for carrying traffic and wind loads. The bridge deck is continuous without expansion joints from the north abutment at one end to the south pylon at the other end, a total length of 2.5 km. The bridge deck is floating between the north pylon legs and between the 4 legs of the central pylon without vertical supports. Only lateral forces are transferred through wind bearings between bridge deck and pylon legs. The full plate diaphragms were spaced 4.0 m.

Only longitudinal displacement at the expansion joints was governed by seismic loading. Longitudinal displacement due to traffic loading could be limited by hydraulic dampers. It was not found necessary to incorporate damping or restraining devices to minimize seismic impact on the deck.

SEISMIC DETAILING

A discussed above, seismic loading had significant impact on the pylon design. The bridge deck, the cable system and the anchor block designs were not governed by seismic loading.

The lower pylon legs on all pylons were governed by seismic loading for the bridge in service condition. Fig. 10 shows the reinforcement layout in the central pylon lower leg cross section where plastic hinging

potentially could occur. Three rows of 36 mm bars @ 150 mm spacing are placed near the outside face and one 32 mm @ 150 mm spacing are placed on the inside face. All bars along the outside and inside perimeters are tied back with 12 mm links spaced 150 mm vertically and 16 mm hoop reinforcement spaced at 75 mm vertically. This arrangement assures good confinement of the longitudinal reinforcement.

Fig. 11 shows a typical lower cross beam cross section for the central pylon. The cross section is reinforced with a combination of prestressing and mild reinforcement. The longitudinal mild steel reinforcement in the top and bottom flanges consists of 32 mm bars @ 150 mm and assures adequate hysteretic energy dissipation should plastic hinging occur. Links spaced at 250 to 300 mm in both directions assure good confinement. The cross beam was designed according to the weak beam - strong column principle.

The piles under the central pylon were also governed by seismic loading. The largest bending moment was caused by the SEE loading. Nevertheless, the longitudinal reinforcement adopted was similar to that from the north pylon piles that were governed by ship impact producing higher pile bending moment.

It was necessary to clamp down the cable saddles on the central pylon. Large unbalanced loads occur in the main cables due to traffic loading in one main span only and seismic loading. While the largest unbalanced load was found for traffic loading, seismic loading attained nearly the same magnitude. Cable slip across the main pylon may have to be countered by means of cable clamps on each side of the central pylon saddles.

Overall, it was estimated that seismic detailing would result in a 5-10% cost increase in comparison to design of the same bridge in a non-seismic environment.

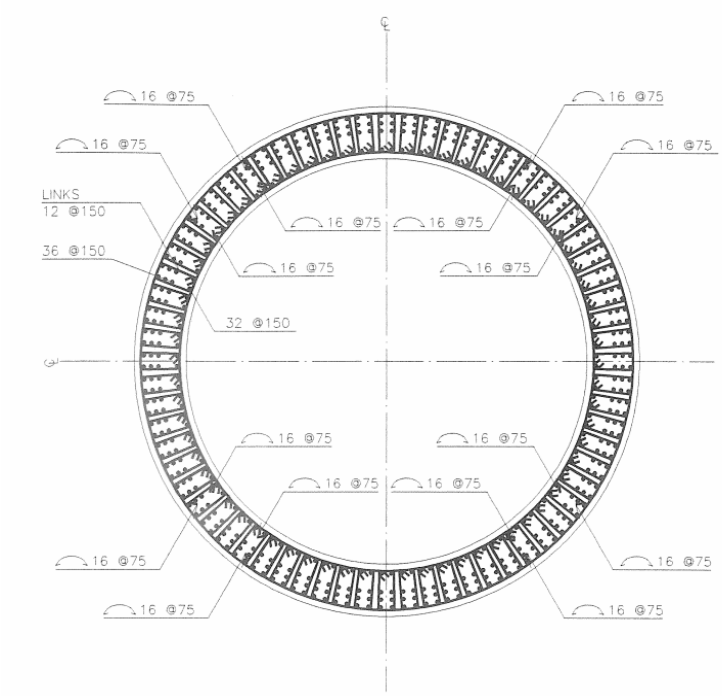

Figure 10-Pylon cross section details

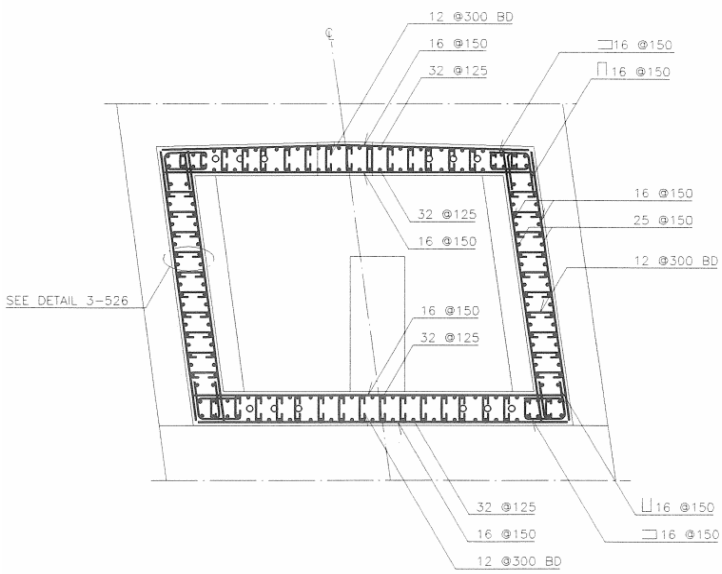

Figure 11-Pylon cross beam details

CONCLUSIONS

It was determined that the selected bridge concept was feasible despite high seismic loading and harsh environmental loads. All of the seismic issues listed above were addressed and resolved.

It was found that Roca Remolinos could support the central pylon and that the north and south pylons could be placed offshore without increasing seismic vulnerability. Anchor blocks placed on shore in the glacial moraine layer were adequate for resisting seismic motion even when horizontal resistance is secured mainly by friction against the ground.

Full height concrete pylons were found feasible and the best solution cost-wise.

Special devices such as shock absorbers and lead-core bearings were not required to control seismic loading.

Finally it was found that seismic loading resulted in only a modest cost increase in comparison to a similar bridge designed for a non-seismic environment. The cost increase was estimated at 5-10%.

REFERENCES

1. Illustrative design, 2001, Bridge across the Chacao Channel, Technical Tender Documents, Volume 4, Book no. 1, Report prepared by Icuatro-COWI for República de Chile, Minesterio de Obras Públicas.
2. S.L. Cramer, 1996, Geotechnical earthquake engineering, Prentice-Hall
3. AASTHO LRFD Design Specification, 1998