13th World Conference on Earthquake Engineering
Vancouver, B.C., Canada
August 1-6, 2004
Paper No. 1610

NONLINEAR 3-D DYNAMIC ANALYSIS USING AN INCREMENTAL LINEAR APPROACH: APPLICATION TO REINFORCED CONCRETE FRAME BUILDINGS WITH BRICK INFILL PANELS

Adrião José BAPTISTA[1], Carlos Sousa OLIVEIRA[2]

SUMMARY

A nonlinear three-dimensional dynamic analysis is developed based on the superposition of linear dynamic responses using the partition of the response spectrum as input motion, in an incremental approach. After the description of the method, an application is made to two different reinforced concrete (RC) frame building infilled with brick panels. The nonlinear behaviour of the frame is concentrated at the frame nodes and the brick panels are represented by nonlinear diagonal struts. For the first building, a planar structure, the results of this method are compared with the ones produced by "pushover analysis" proposed by ATC-40. Finally, an application to a three-dimensional RC building illustrates the potentiality of the method. The buildings were subjected to increasing seismic loads until total collapse. A global vulnerability function based on the decrease of frequency was also obtained.

INTRODUCTION

The objective of this study is to present a methodology developed to analyse the seismic behaviour of a RC frame building with infill brick panels, using an incremental linear analysis. The method is based on the partition of the response spectrum into smaller loads which are applied to the structure in a linear form. Whenever the stress at an element exceeds a certain value (in relation to its resistance), this element is taken away or reduced according to a given law, and the modified structure is subjected to a new load increment in the form of response spectrum. The energy dissipated in the process of deterioration is incorporated in the algorithm in order not to subject the structure to more seismic energy than it should. We called the *Incremental nonlinear dynamic method*.

This method uses the complete structure in its three-dimensional definition, and considers any number of modes to better represent all configurations affecting the response. This is possible due to the intrinsic linearity of the programme with which the modified structure is analysed for each increase of loading. The technique for modifying the structural elements is quite simple: suppression of diagonal struts which represents the infill brick panels; insertion of hinges at the beam and column edges.

Two applications were made. The first one was made to a planar nine storey RC frame building with infilling brick panels which was also analysed by the "pushover" technique using the ATC-40 recommendations. Results show similar pattern in damage inflicted even though the present method aggravates slightly the results. The second example is a 3-D analysis of a simple four-storey RC

frame building with a simple rectangular plan, having infill panels in both horizontal directions. The main dynamic properties of the analytical model prior to the initial loading were calibrated by means of comparison of frequencies of vibration obtained in the model and by *in-situ* testing.

The design of building structures requires that the analytical modelling used can represent in the best way the structural behaviour for the different loads which are present during the life time of the structure. In the case of the static loads, the knowledge of loads and material properties do proportionate a good analysis. However, especially for the case of seismic loads, the analytical representation commonly used in the professional offices cannot represent well the corresponding behaviour due to two main reasons: (i) the nonlinearity of materials for amplitude motions above a certain limit; (ii) initial dynamic properties of the structures may diverge significantly from the real ones, especially if infilling panels are present. In fact, if for the first reason the situation is very difficult to deal with due to large number of variables affecting the nonlinear behaviour, for the second reason, the initial properties (natural frequencies) as presented by the various codes are, in general, very different from the values obtained by *in-situ* measurements [1].

The above mentioned issues have motivated a large amount of researchers to do investigation in the topic. In this work an alternative method is proposed for the nonlinear analysis taking into consideration the entire dynamic analysis of the structure by superposition of linear contributions using response spectra concepts.

In another work [2] the model of a strut to represent the brick panels was developed. Its properties were established in such a way that frequencies of the entire model of the buildings with struts and the frequencies obtained by *in-situ* measurements would agree. This leads to the consideration that the proposed model for the brick panels is quite satisfactory and can start being used at design offices as a current approach. For a more complete analysis that contemplates the phase of design and the verification of the structural safety, the model strut needs to represent not only the stiffness of the panel but also its strength and capacity to dissipate energy during the earthquake motion. In that work only one strut per panel was used. This simplification causes some problems in the symmetry of the vertical reactions. However, in a building with a large number of panels the errors derived from this simplification are diluted; but in a small building, the error might be significative in relation to the axial stresses in the columns. One way to solve the problem is to introduce two diagonal struts per panel, each one with half section.

The computation of the structure is commonly done in the linear regime, and the nonlinearity of material behaviour is associated to behaviour coefficients. These are set in all codes based on empirical knowledge and experience gained essentially with nonlinear analysis of one degree of freedom systems under seismic actions. This solution does not entirely satisfies the scientific community, which has turned, more and more, to quite sophisticated nonlinear software for the direct analysis of structures.

In recent years various authors have proposed new methods for designing a structure based on its performance for a given level of deformation [3]. There is some consensus that a good seismic performance can be guaranteed if the level of displacements, global and local, in the structure is controlled. Based on these concepts, recent codes such as the ATC-40 [4], FEMA-273 [5], as well as the EC-8 [6], recommend a design based on control of displacements, using nonlinear static analysis for imposed loading, known as “pushover analysis”.

INCREMENTAL NONLINEAR DYNAMIC METHOD

The method proposed in this work [7] uses essentially the linear dynamic analysis in an incremental form in order to determine the performance curve of a structure. While in the methods above

described the performance curve is determined by the increment of static forces applied at the storey levels, in this method the increment is made through a combination of storey static forces, representing the accumulation of response spectra taken as incremental steps, with the incremental response spectrum.

In all phases the analysis is linear. The nonlinear global behaviour is obtained by introducing hinges in the frame sections where rupture is taking place according to the reinforced concrete rules. For the case of diagonal struts, these are eliminated once their rupture is observed, or their section is reduced to simulate the presence of progressing cracking.

We consider that the analysis is terminated when the total or partial collapse is eminent, a mechanism is formed or when we attain a given state of deformation. It is then possible to draw various curves showing the evolution of the structure along the increment of input motion. In here we present two examples illustrating this evolution: (i) a *behaviour curve* defined by the relation between the total shear at the foundation and the displacement at the top (control node); (ii) a *vulnerability curve* which relates a global damage index with a factor of input level (factor of seismic accumulation, FA). The general degradation of stiffness is reflected in the value of the natural frequencies of the structure, which, in the present case, corresponds to the first mode in each direction.

The general degradation of stiffness of the structure is globally reflected in the frequency values. Working only with the first mode we define a global damage index as

$$D = \frac{f - f_E}{f_U - f_E} \tag{1}$$

where f, f_E and f_U are, respectively, the frequencies at each incremental step, the elastic (initial) and the corresponding to immediately prior to collapse (ultimate).

The present method can be used with any commercial linear computer programme for the dynamic analysis with response spectra, with preference the ones which include a library to automatic determine the conditions of rupture of the beams and columns. Otherwise, we need a parallel computation for those determinations.

Description of the method

1st step – Model the structure – Any model can be used following the commonly practiced rules.
2nd step – Definition of input motion – by means of response spectrum.
3rd step – Application of an incremental value of input motion – The application of input motion is made in an incremental form in such a way to describe the evolution of the structure from the early beginning to the collapse. The incremental steps start with a small parcel of the response spectrum, and at the initiation of the nonlinear part, they should be adapted in order to reproduce a target precision. In each incremental step after the initiation of the nonlinear behaviour, the structure is modified according to the stresses developed in the various elements, and new incremental inputs are successively applied.
4th step – "Nonlinear" analysis – The first time an element has to be removed or the node conditions change, we need to define *storey forces* at each storey level in order to combine them with next incremental spectral load. These *storey forces* must take into account two aspects: (i) the energy already installed in the structure until this step; and (ii) the energy dissipated in the formation of local ruptures. The forces at each storey level to apply in each incremental step are static forces that simulate the seismic action applied to the structure in the increment immediately prior to the present one and they should represent the loss of energy to produce the hinges or break the struts. Each time a new collapse is attained in one or more sections, new hinges are introduced. If struts collapse they are eliminated or replaced by others with reduced sections.

At each incremental step the values of the following variables should be stored:

- frequencies of first mode;
- displacement of control node (centre of mass of top storey);
- base shear;
- shear forces in the columns and axial forces in beams and struts due to the incremental response spectrum. Based on these internal forces the correspondent forces at the storey level (*storey forces*) are computed.

This 4th step requires the determination of two groups of storey forces due to the incremental response spectrum. The first refers the structure coming from the previous incremental step, $\delta \mathbf{F_n}$, the second refers to the structure after the introduction of the alterations resulting from the combination of stresses in the previous incremental step, $\delta \mathbf{F_{n+1}}$. The difference between $\delta \mathbf{F_{n+1}}$ and $\delta \mathbf{F_n}$ represents the variation the storey forces due to the energy dissipation to form the hinges and break the struts and should be subtracted from $\delta \mathbf{F_n}$, producing $\delta \mathbf{F_n} + |\delta \mathbf{F_n} - \delta \mathbf{F_{n+1}}|$. The increment in storey forces at the end of this incremental step is then $\Delta \mathbf{F_n}$, which should be added to the total storey forces coming from all previous incremental steps and designated by $\mathbf{F_n}$. Expression (2) represents the new storey forces which pass to the new incremental step

$$F_{n+1} = F_n + \Delta F_n \tag{2}$$

These *storey forces* are then combined with the spectral increment.
5th step – Repetition of previous step until the total collapse of the structure. In each incremental step we keep track of all variables referred in step 4.

Comments
In each incremental step the seismic energy applied through the response spectrum represents a part of the total energy and applies it along the total duration of the record. For the time being it was not possible to subdivide this duration in parts, and this issue represents the main source of error of the present methodology.

The illustrations made in the following we use the rules of bending plus axial forces defined in the EC-2 (1998) [8]. The *collapse relation* (CR) for each section is computed all the times, and "collapse" takes places if this relation equals or is greater than one (we call it local *rupture*). Sometimes in the same incremental step several sections attain the rupture and we select the sections with higher CR to introduce the hinges and leaving for the next increment the ones with smaller relation. The reason for this option is that the sections with higher CR are certainly the ones that attained in first place the rupture. The same reasoning applies to the selection of struts to be eliminated. In a more detailed analysis, an iterative procedure could be used at each step reducing the incremental load in order to produce rupture only at a single element.

REINFORCED CONCRETE PLANAR FRAME WITH INFILLED WITH BRICK PANELS

The building under study has been analysed by Proença et al. [9], following the "pushover" approach. It is a reinforced concrete frame structure with 9 storeys above ground and one below, built in early 1950 and corresponds to a massive public building with a design reflecting the best practiced knowledge at the epoch. There are six frames in the transverse direction, spaced about 5.6 to 5.8 m and three in the longitudinal, connected by rectangular beams. The heights are generally 3 m with a few with 4 m. The sections of the columns decrease with height, being 25% at the top. Slabs are made of ceramic blocks of variable thickness (28, 33 and 40 cm) supported in 10 cm thick lintels, all covered by a 7 cm compression continuous slab. Direct footings and the materials are from early 1950 with fc = 20 MPa and fy = 307 MPa.

The masonry panels are of two types: the peripheral panels up to the 4th floor are made of stone material with 50 cm thick and a modulus of elasticity E=5 GPa and a rupture tension of 5 MPa. The

thickness in upper storeys is 40 cm in the next two and 30 cm in the others. These masonries as well as the ones in the transversal direction are full bricks with E=3 GPa and a rupture tension of 2.5 MPa.

Simplifications taken in the model for the application of ATC – 40

The pushover analysis of this building according to the ATC-40 methodology was performed in the transversal direction. The main simplifications refer essentially the modelling of masonry panels. The transversal brick panels are 20 cm thick in average in a total number of 12 panels per storey. The model of diagonal strut represents the assemblage of half of them into a single frame. The two frames selected to place the struts were the extreme ones. Thickness of each strut was 20% of total length. In relation to the stone masonry panels this number is 15%. In order not to load the struts with the dead-loads, they were placed in two extra frames, almost at the same position of the lateral façades but without bending stiffness.

Simplifications taken in the model for the application of *incremental nonlinear dynamic method*

In this particular example, and in order to compare results with the pushover analysis, we applied the dynamic nonlinear model to an interior transversal frame. This frame counts with the reinforced concrete of columns and beams with their characteristics, and the struts were obtained as referred above [2], in which for the present case leads to a thickness of 24 cm. Masses were discretized by all nodes and not only at the centre of masses of each storey.

Seismic input and its incremental value

We used the spectral shape given in EC8[10] for a 5% damping ratio and anchored to a PGA of 275 cm/s^2, reflecting the seismic hazard of Lisbon for a 500-1000 years return period. The incremental input corresponds to 10% of the full spectral value.

Results

In order to verify the approximation of the analytical model to the real structure, *in-situ* ambient vibration testing was performed at the building for identification of modal frequencies [9]. Table 1 compares the values obtained by *in-situ* testing with the two developed models for the first modes. It is worth mentioning the proximity of *in-situ* value for the transversal direction with the planar model for the incremental nonlinear dynamic analysis.

Table 1: Comparison of frequencies (Hz) by *in-situ* testing and the two models

Mode Type	In-situ	(ATC-40) model	Incremental nonlinear dynamic model
Transversal	2.42	2.05	2.41
Longitudinal	2.43	2.63	–
Torsion	3.80	4.29	–

Partial ruptures obtained by ATC-40 approach

Two methods were developed in relation to this approach, named Model 1 and Model 2, Figure 1. In Model 1 the sections and the masonry elements suffering rupture are identified. As a soft-storey takes place, a Model 2 was developed taking into account the new reinforced concrete sections and the elimination of struts. The final result shows the damage states obtained with this static analysis for the frame. The structural degradation in the struts is possibly a little larger than what Model 1 predicts, due to the superposition of results of the two models.

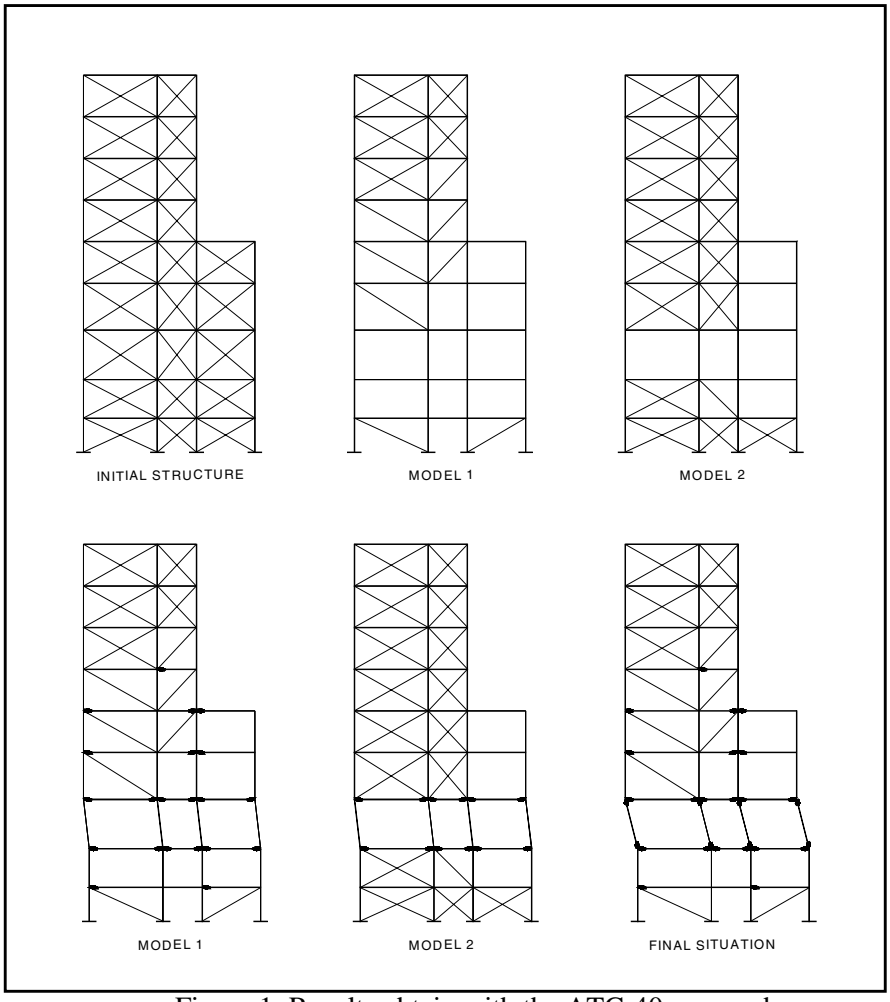

Figure 1: Results obtain with the ATC-40 approach

Results obtained by the incremental nonlinear dynamic approach

Table 2 presents the values of the most significant parameters along the incremental step process. This refers Figure 2. Last line of Table 2 and the corresponding situation in Figure 2 corresponds to collapse of the structure with the formation of a mechanism.

Table 2: Values of most significant parameters for different FA

Accumulation factor (FA)	Displ. at control node (mm)	Base shear (kN)	Frequency (Hz)	Damage index (D)
0.1	2.75	397.21	2.31	0.05
0.2	3.60	448.80	2.05	0.16
0.3	9.62	631.30	1.36	0.47
0.4	16.80	564.16	0.94	0.66
0.5	38.66	615.10	0.55	0.83
0.6	81.47	435.14	0.21	0.99
0.7	523.10	333.30	0.18	1.00

Figures 3 and 4 present respectively the *behaviour curve* and the *vulnerability curve* for this structure.

Comments and Discussion of Results

The observation of Figure 2 suggests the following comments:

- Already for the first step FA=0.1, two panels suffer rupture.
- The propagation of rupture of masonry panels enhances the irregularity of the structure and then extends creating a soft-storey at the 4th level.

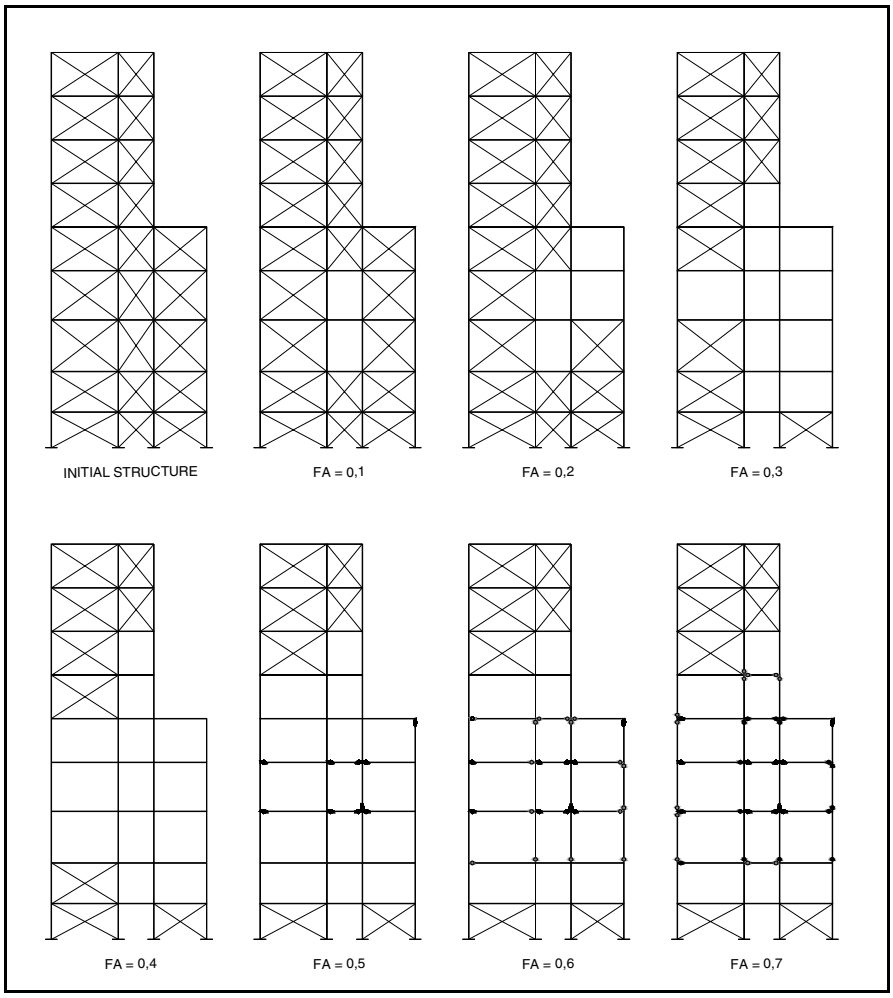

Figure 2: Results obtain with the incremental nonlinear dynamic approach

- At the 4th step (FA=0.4) with the entire rupture of panels at 3rd, 4th and 5th levels, the beam at the 4th level and one column end at 5th level form hinges.
- The propagation of beams and columns hinging after this step clearly shows the importance of the change of stiffness in the structure.
- The entire collapse takes place for FA=0.7, with the formation of hinges at the column tops at the 5th level and column bottoms at 3rd level.
- The *behaviour curve*, Figure 3, clearly identifies the path along the loading, showing three different regions: the elastic, the transition and the region of stiffness degradation with a long plateau, till collapse.

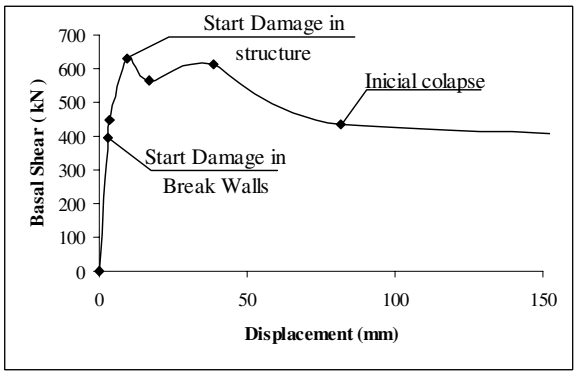

Figure 3: *Behaviour curve*

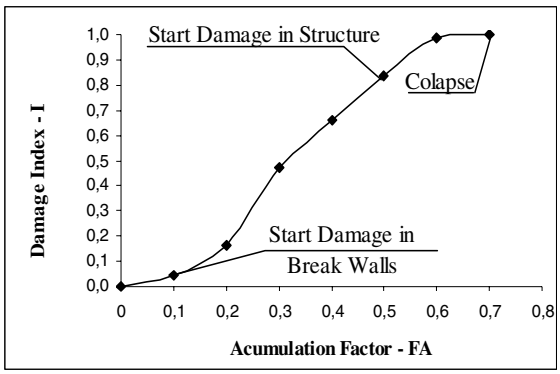

Figure 4: Damage index curve

FIRE BRIGADE TOWER

Model description and seismic input

This simple structure was selected for analysis for several reasons: first it is a real structure for which we have very good information on materials, design, etc.; it has been subjected to several *in-situ* testing; it is a three dimensional structure with four storeys only. This last point is, so far, very important due to the amount of data to manipulate, which increases tremendously with the number of storeys and number of frames.

We followed closely the design with a few modifications such as the one of symmetrizing the steel in the column sections. The designer followed the portuguese code, namely the RSA [11] and the REBAP [12], while for the collapse relation (CR) we followed the EC-2 [8]. In spite that the latter follows a more severe criterion than REBAP, this is not sufficient to create any important problem in the application of the methodology. The consequence is that we will arrive more easily to collapse than if we had taken the portuguese criteria.

This structure is located in Lisbon implanted in a soil type 3 of poor quality. Response spectrum with a PGA = 247 cm/s^2, 5% damping was used; the incremental input was FA=0.5. An intermediate step before the first rupture section was made with FA=0.25.

To verify the structural safety of the structure, a preliminary computation was made based on EC-2, considering a combination of loads, first the dead-load as fundamental, and then the seismic load. A behaviour coefficient equal to q=2.5 was used.

$$S_D = 1{,}35\, S_G + 1{,}5\, S_Q \tag{3}$$

$$S_D = S_G + \frac{1{,}5}{2{,}5} S_E + 0{,}4 S_Q \tag{4}$$

We took live-loads equal to 2 kN/m^2 in the typical floors, and 1 kN/m^2 for the upper terrace. For the dead-loads a contribution of 1 kN/m^2 was considered for floor coverings.

Results and Comments

Figures 5 a, b, c, d and e, shows the evolution of the structure along the incremental step procedure, with the location of sections and panels attaining rupture. Parameters CR and CR' are, respectively, the maximum values of the collapse reactions for the structural sections and struts in each incremental step. The frequency values of first mode in the transversal direction, longitudinal and torsion are designated by f_1, f_2 and f_3. V_x and V_y are the total base shears in the longitudinal and transversal directions and d_x and d_y the correspondent displacements of the control node (mass centre of upper slab). In the first incremental step only a few panels attained the rupture, CR'=1.1.

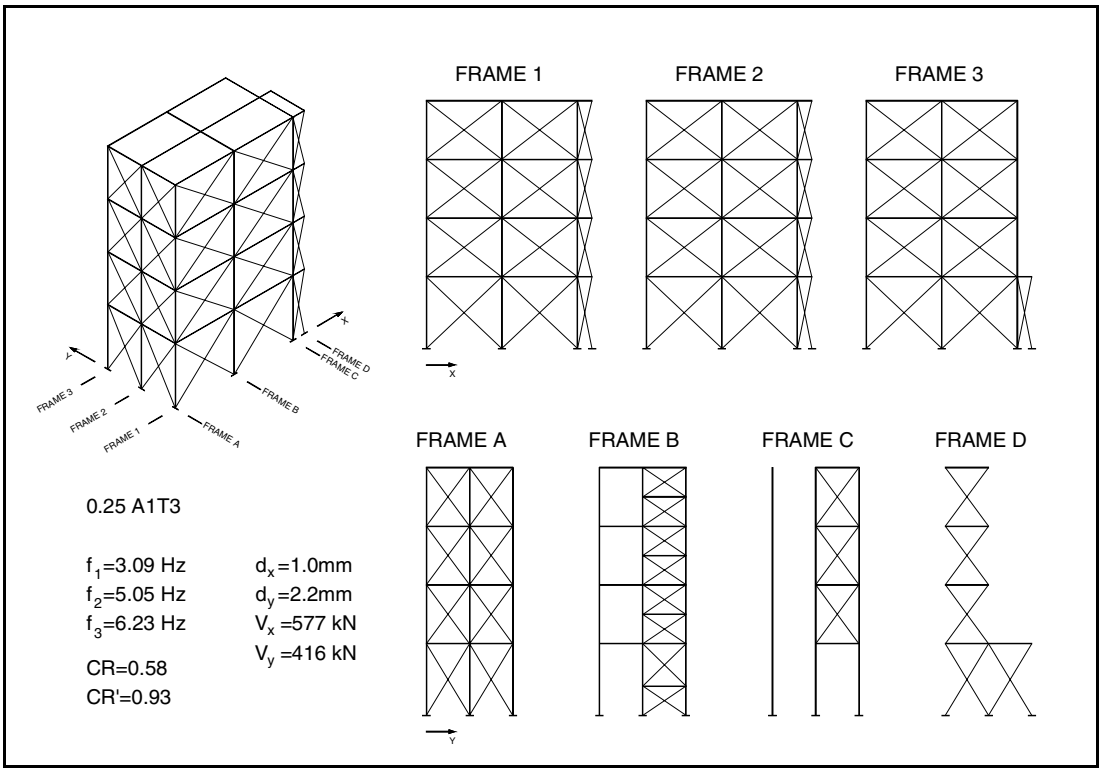

Figure 5.a – Evolution of sections with increasing FA by the incremental nonlinear dynamic approach

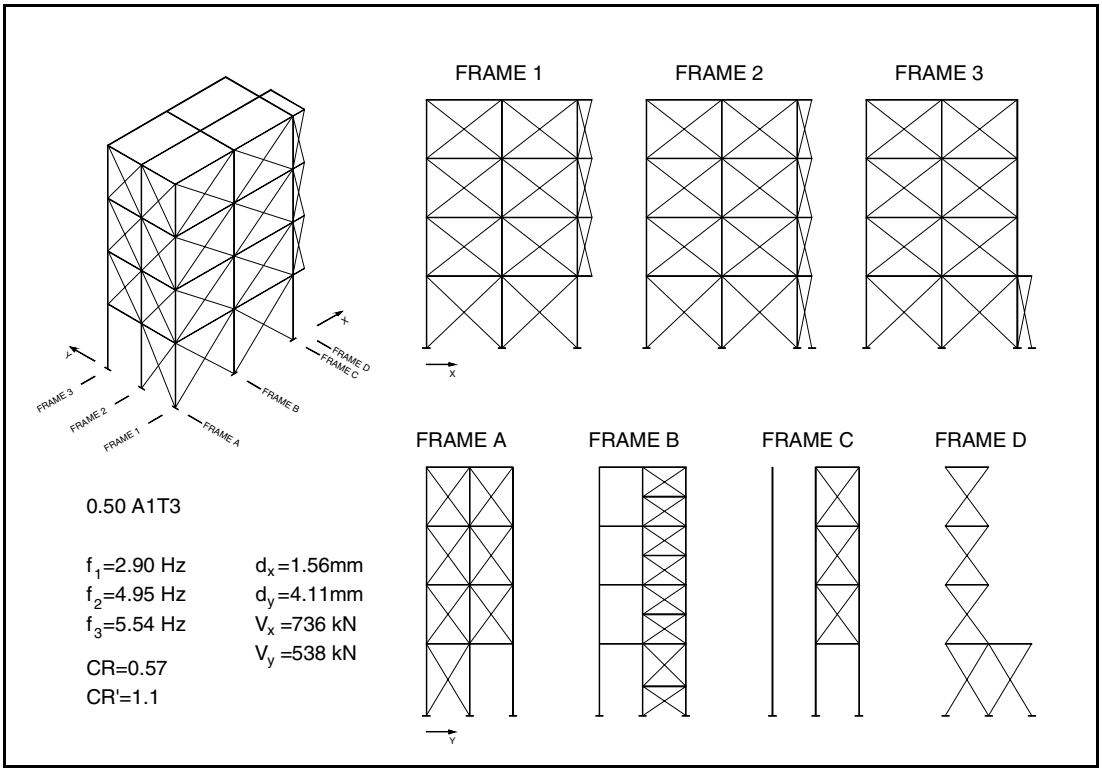

Figure 5.b – Cont.

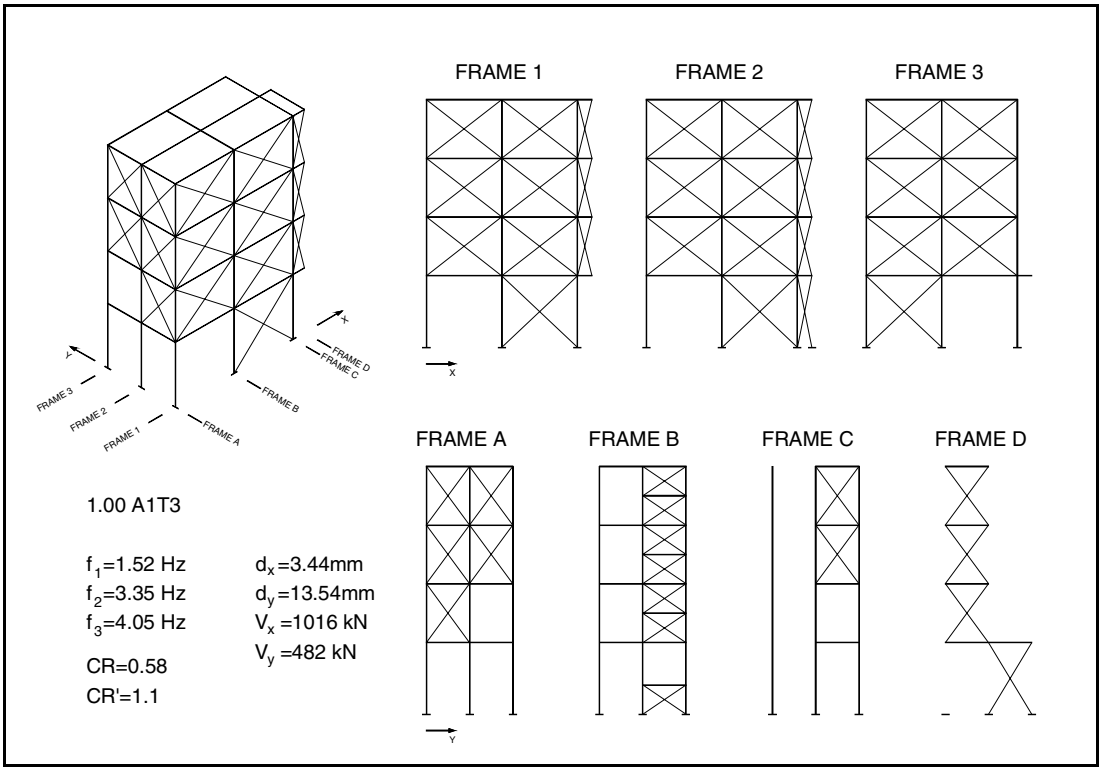

Figure 5.c – Cont.

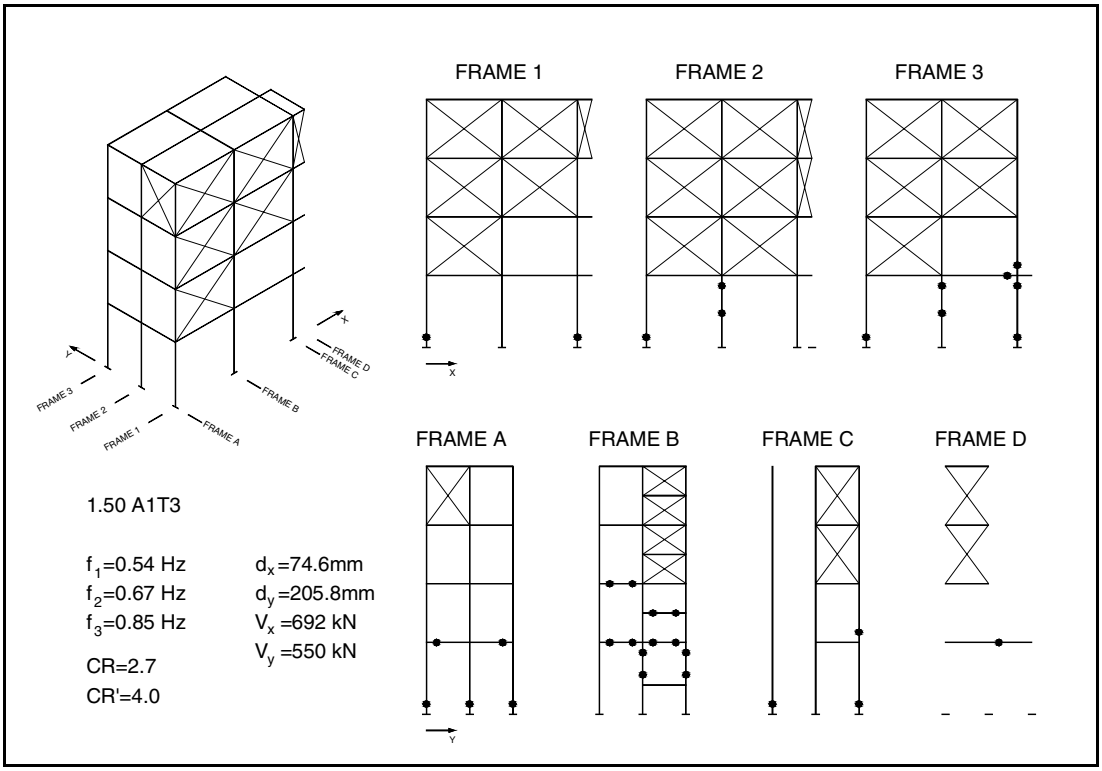

Figure 5.d – Cont.

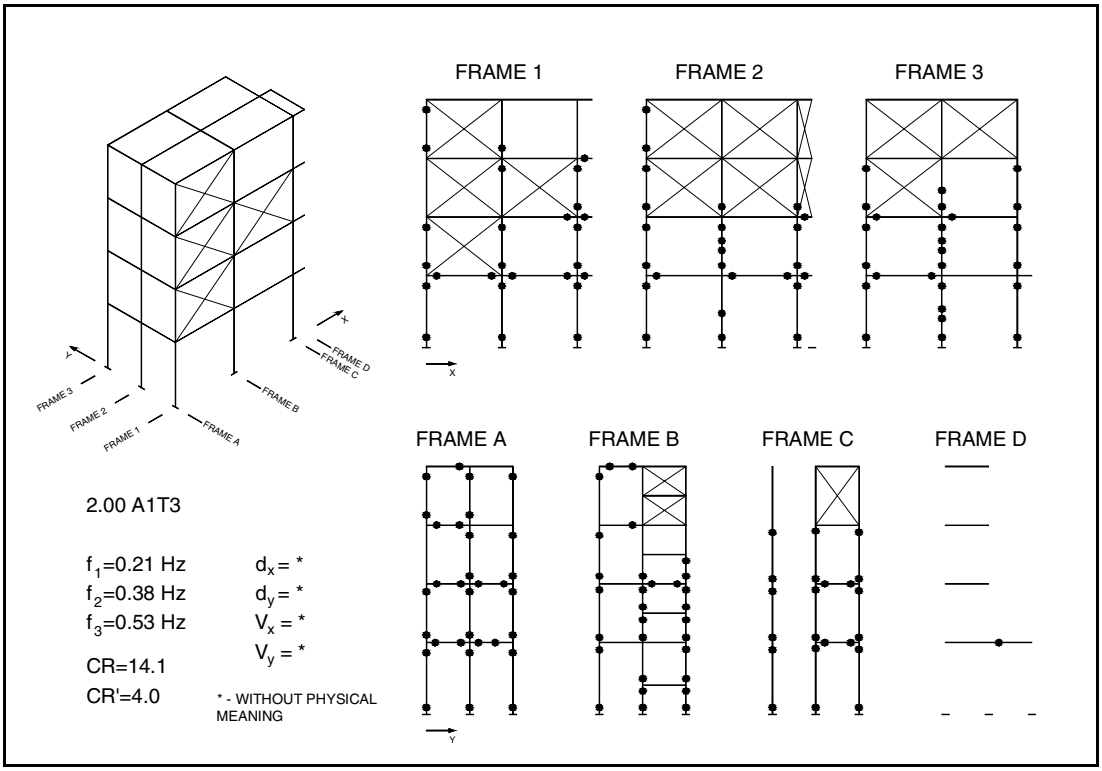

Figure 5.e – Cont.

For a better understanding of the behaviour of the entire structure we analysed separately each one of the directions, presenting two *behaviour curves* and later both together. The structure is stiffer in the longitudinal direction with an initial frequency of 5.05 Hz, than in the transversal with 3.09 Hz, due to the geometry and orientation of columns.

The first panels to reach rupture are in the transversal direction where the structure is less stiff. Also, for all incremental steps, we observe that the base shears in the transversal direction are lower than in the longitudinal direction, while displacements are larger. Maximum displacements at the end are 20.58 cm and 7.46 cm, respectively in the transversal and longitudinal directions.

Comparing the *behaviour curves*, Figures 6 and 7, we verify that for FA> 0.5 the nonlinear phase initiates with a longer transition in the transversal direction than in the longitudinal.

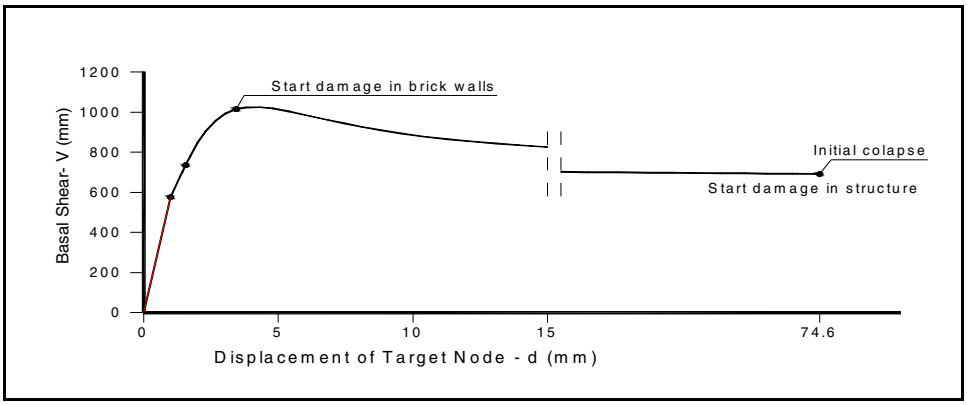

Figure 6 – *Behaviour curve* in the longitudinal direction

The structure behaves almost linearly up to FA=1.0 in the longitudinal direction, while in the transversal for this incremental value, it is clearly in the nonlinear phase. The collapse initiates for FA=1.5, and becomes total for FA=2.0.

In both behaviour curves we see an increase of base shear until the initiation of rupture in the panels, with a slow decrease until the final collapse. On the other hand, the displacements increase tremendously when the panels rupture. This means that the masonry panels initially contribute to the resistance of the structure under seismic actions, but then the frame structure is clearly insufficient to take the loads.

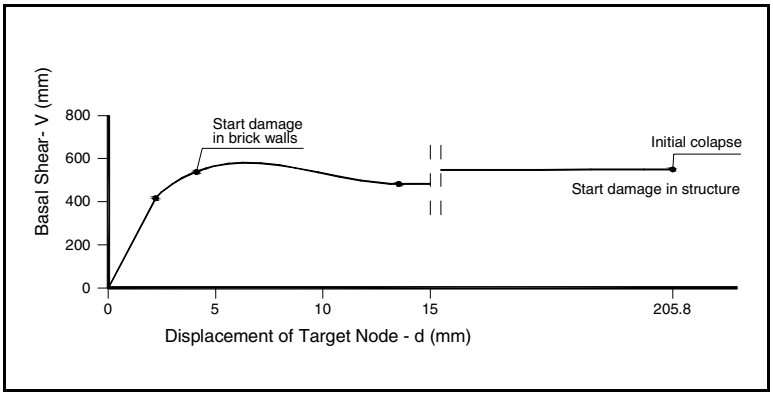

Figure 7 – *Behaviour curve* in the transversal direction

Figures 8 a), b) and c), and Table 3 summarize the behaviour of the structure in terms of CR and CR', as well as of damage index.

Table 3 – Damage index

FA	D(%) – Trans.	D(%) – Long.	D(%) – Torsion	D(%) – Global
0.25	0.00	0.00	0.00	0.00
0.50	0.07	0.02	0.12	0.08
1.00	0.55	0.36	0.38	0.40
1.50	0.89	0.94	0.94	0.93
2.00	1.00	1.00	1.00	1.00

In Figure 8 c) we present the global damage index curve taking into consideration both directions by combining in terms of mean square root the values of the first three frequencies, transversal, longitudinal and torsion.

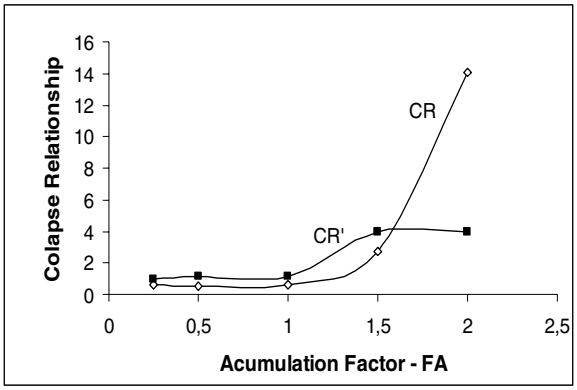

a) Collapse relations CR for the structure and CR' for the masonry panels

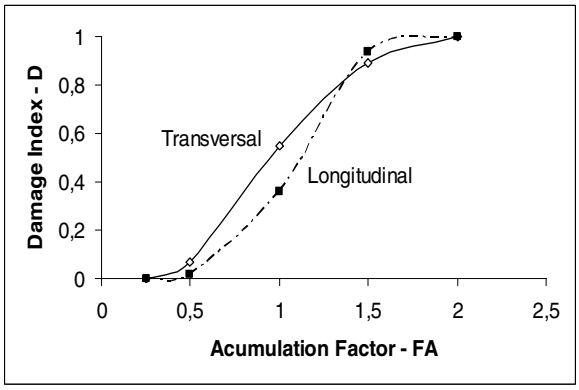

b) Damage index for the transversal and longitudinal

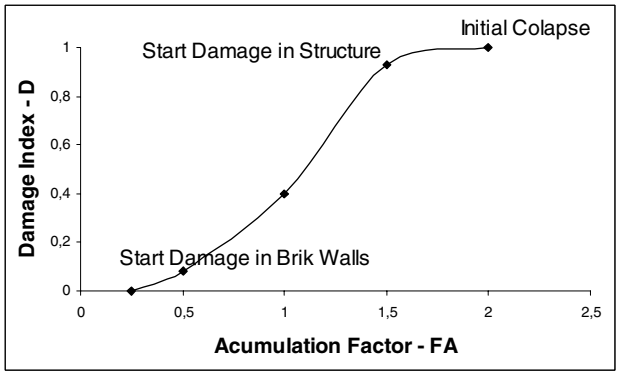

c) Global damage index

Figure 8 – Collapse relations (CR and CR´) and damage index curve

CONCLUSIONS

The following conclusions can be drawn from the analysis of all presented results.

1. The incremental nonlinear dynamic approach method permits to obtain the response of a building with a relative good approximation.
2. It enhances the role of the so-called non-structural elements such as infilling brick panels in the seismic behaviour of local elements as well as of the global response of the building.
3. It put in evidence the influence of structural irregularities as well as from infilling panels.
4. It is a good tool to localize damage as function of input intensity.
5. It can be used in conjunction with fragility curves to study different levels of damage and structural safety.
6. Drawbacks of the method come essentially from two items: the application of response spectrum considers that the incremental action is applied during all the duration of shaking; at present, the criterion for element rupture is quite elementary and abrupt, not allowing for intermediate stages of "plastification".
7. The present method leads to results comparable to the "pushover" analysis favoured by ATC-40.
8. Comparing the two methods, the present method allows a better description of the behaviour of the structure with the evolution of seismic loading, clearly showing the sequence of damaged elements.
9. It also profits from an entire dynamic analysis with all its potentialities, (use of as many modes as wanted; three-dimensional behaviour, including torsion; damping ratio, etc.).

10. Small improvements are easily possible, such as the inclusion of better laws for the struts and reinforced concrete sections.

REFERENCES

[1] Baptista, A. J., Oliveira, C. S. (2001), "Aferição de Modelos Estruturais de Edifícios Correntes com base em Medições in-situ de Frequências Próprias". Proceedings, 5º ENSES, Ponta Delgada, Açores. (in Portuguese)

[2] Baptista, A. J., Oliveira, C. S. (2003), "Modelo de Escora para Estudos de Paredes de Alvenaria de tijolo com base em Ensaios Experimentais". Proceedings, 2º AEIS, Málaga. (in Portuguese)

[3] SEAOC Vision 2000 (1995), "A Framework for Performance Based Design", Vol. I to III, SEAOC, Sacramento, California.

[4] ATC-40 (1996), "Methodology for Seismic Evaluation and Retrofit Existing Concrete Buildings", Applied Technology Council", Redwood City, California.

[5] FEMA-273 (1997), "NEHRP Guidelines for Seismic Rehabilitation of Buildings", Building Seismic Safety Council, Washington, DC.

[6] EC-8-prEN 1980-1 (2001), "Specific Rules for Masonry Buildings", Section 9 in Design of Structures for Earthquake Resistance, Part 1, CEN, Brussels.

[7] Baptista, A. J. (2003), "Análise do Comportamento de Edifícios Correntes de Betão Armado Sujeitos à Acção Sísmica", PhD Dissertation, Universidade da Beira Interior, Covilhã. (in Portuguese)

[8] EC-2, Eurocódigo-2 (1992), "Design of Concrete Structures", ENV 1992, CEN, Brussels.

[9] Proença, J. M. et al. (2004), "Seismic Vulnerability Assessment of the Santa Maria Hospital in Lisbon". Proceedings, 13WCEE, paper # 1442, Vancouver, Canada.

[10] EC8, Eurocode 8 (1999), "Design of Structures for Earthquake Resistance", ENV1996, CEN, Brussels.

[11] RSA (1983), "Regulamento de Segurança e Acções para Estruturas de Edifícios e Pontes", Decreto-Lei 235/83, Lisboa. (in Portuguese)

[12] REBAP (1983), "Regulamento de Estruturas de Betão Armado e Pré-esforçado", Decreto-Lei 349-C/83, Lisboa. (in Portuguese)