13th World Conference on Earthquake Engineering
Vancouver, B.C., Canada
August 1-6, 2004
Paper No. 1568

RETROFIT PROVISIONS IN THE INTERNATIONAL EXISTING BUILDING CODE

Fred TURNER[1]

SUMMARY

The International Code Council published the first edition of the International Existing Building Code (IEBC) in February 2003.[1] It contains five appendix chapters with seismic retrofit provisions for vulnerable building types common to many communities in North America. These chapters include simple-to-apply, cost-effective, compliance-based and prescriptive provisions for improving the earthquake resistance of:

1) Unreinforced masonry bearing wall buildings;
2) Single-story tilt-up, reinforced concrete or masonry wall buildings with flexible roofs;
3) Single-unit wood frame dwellings with poorly braced or anchored walls below the first floor;
4) Multi-unit wood frame residential buildings with soft stories or open fronts;
5) Non-ductile concrete frame buildings.

The Structural Engineers Association of California's Existing Buildings Committee (SEAOC-EBC) has been developing and maintaining these chapters since the late 1980's. This paper will summarize these chapters, recent efforts to develop commentary for the retrofit provisions, and plans for future code change proposals.

While these retrofit chapters don't explicitly use Performance Based Earthquake Engineering (PBEE), it is hoped that future collaboration between researchers and engineers using PBEE will help calibrate, improve the effectiveness, and lower the costs of retrofitting according to future versions of these provisions while improving on their simplicity and ease of enforcement.

With the emergence of the World Housing Encyclopedia[24], the next recommended step is to develop regional consensus on retrofit provisions for other typical vulnerabilities in common building types throughout the world. Perhaps the IEBC approach to retrofit provisions can serve as one model for developing similar chapters that address retrofit needs in other countries for other common building types.

[1]Staff Structural Engineer, California Seismic Safety Commission, Sacramento, California, USA. www.seismic.ca.gov

INTRODUCTION

Older buildings present far greater risks of earthquake losses than new buildings, yet building codes in the United States provide remarkably little earthquake safety guidance for owners and designers planning to make alterations to existing buildings. The general intent of U.S. building codes is to specify requirements for new construction. Codes typically do not impose detailed or unreasonable restrictions on existing buildings. They allow alterations to existing buildings that will render them not substantially more vulnerable to earthquake damage than they were before the alterations. U.S. building codes presume that existing buildings are safe enough for occupancy unless code enforcement officials deem them to be dangerous. In such cases, they specify procedures to vacate and demolish or repair buildings.

Enforcers of building codes in older jurisdictions issue far more permits for alterations to existing buildings than permits for new construction. However, U.S. Codes for new construction do not contain requirements for comprehensive seismic evaluations of existing buildings that would consistently identify serious flaws that can affect the safety of the public.

Most buildings that have collapsed in recent U.S. earthquakes had been altered numerous times over their lives. In hindsight, these alterations were missed opportunities that could have triggered seismic evaluations and retrofits to reduce vulnerable conditions before collapse occurred. It behooves the building industry and governments to consider alterations to existing buildings as potential windows of opportunity to introduce seismic evaluations and partial or complete retrofits where they are warranted.

Figure 1. This building in Paso Robles was originally built in 1892 and was altered many times over its life. It collapsed killing two victims in the December 22, 2003 M6.5 San Simeon California Earthquake.

A new tool for this collapse-reduction approach is the International Existing Building Code (IEBC). The International Code Council published its first edition in February 2003. The IEBC's first twelve chapters contain administrative and technical provisions for seismic evaluations and retrofits that can be triggered by repairs or other alterations to buildings. Triggers are graduated depending upon the level of alterations. If this code were widely enforced, minor alterations would not trigger seismic evaluations or retrofits, but major alterations would. Intermediate alterations would trigger graduated requirements depending on the scope of work. The IEBC offers exemptions from disabled access requirements and new fire mandates for alterations that consist only of repairs and seismic retrofits. It contains references to comprehensive Performance Based Earthquake Engineering (PBEE) provisions as well as simpler, more prescriptive alternatives that are the focus of this paper.

Currently the states of Michigan, Oklahoma, Pennsylvania, and West Virginia have adopted the IEBC. Some local governments in Illinois, Nebraska, South Dakota, and Tennessee have also adopted it. [18]

This paper summarizes the efforts to develop seismic retrofit provisions that preceded the IEBC, recent efforts to develop commentaries for the IEBC's retrofit provisions, and long-term plans for code change proposals.

PRIOR DEVELOPMENTS IN SEISMIC RETROFIT PROVISIONS IN THE WESTERN U.S.

In 1987, the International Conference of Building Officials (ICBO) published its Uniform Code for Building Conservation (UCBC).[2] While not widely adopted by governments, the UCBC broke new ground by including an optional Appendix Chapter 1 with seismic retrofit provisions for unreinforced masonry (URM) buildings, a common type of fire-resistive construction throughout the U.S. These provisions were based on an ordinance developed by the City of Los Angeles for its mandatory seismic retrofit program.[19]

In the early 1990's, volunteers in the Structural Engineers Association of California with practices throughout the state formed an Existing Buildings Committee (SEAOC-EBC). They developed a statewide consensus on proposed amendments to the URM retrofit provisions in the UCBC Appendix Chapter 1. These amendments were accepted by ICBO and published in the 1991 Edition. SEAOC-EBC also published a commentary on this edition in 1992.[3] In a parallel effort, a committee of volunteer code enforcement personnel sponsored by the California Building Officials developed recommended administrative provisions that included timeframes for mandatory retroactive strengthening programs. The California Seismic Safety Commission published these as a recommended Model Ordinance initially in 1985 and later updated in 1995.[4]

In 1979, a state government agency called the California State Historical Building Safety Board developed and adopted the California Historical Building Code (CHBC)[5]. Among other provisions, it contained seismic retrofit provisions for archaic materials such as adobe (sun-baked masonry). Later editions of the CHBC adopted the UCBC Appendix Chapter 1 as suitable for retrofitting historical URM buildings. The 2001 CHBC also contains a general requirement that retrofits of other types of historical buildings should at least be capable of resisting 75 percent of the seismic force levels in the 1994 Uniform Building Code. [20]

In the 1990's, the SEAOC-EBC focused its efforts on developing proposals to further improve the URM retrofit provisions in Chapter 1. It also created similar chapters for other vulnerable building systems common to California:

Chapter 2 - Single-story tiltup, reinforced concrete or masonry wall buildings with flexible roofs;

Chapter 3 - Single-unit wood dwellings with poorly braced or anchored walls below the first floor;
Chapter 4 - Multi-unit wood residential buildings with weak or soft stories, or open fronts; and
Chapter 5 - Non-ductile concrete buildings.

The intent of these chapters is to provide simple, cost-effective methods for reducing risks common to narrowly defined classes of vulnerable building types. In the late 1990's efforts to consolidate model code writing organizations caused a hiatus in the publication of a U.S. code expressly written for existing buildings. The 1997 edition of the UCBC was its last printing. In 2000, ICBO published *Guidelines for the Seismic Retrofit of Existing Buildings* (GSREB).[6] ICBO then merged with two other model code developers to form a new nationwide International Code Council. The GSREB was later adopted by ICC and reprinted as the Appendix Chapters in the IEBC in its first edition in 2003.[1]

Throughout the 1990's much of the attention toward existing building evaluations and retrofits was directed toward the development of performance based earthquake engineering tools that are now published by the American Society of Civil Engineers as ASCE 31 *Seismic Evaluation of Existing Buildings,*[7] and FEMA 356, *Seismic Rehabilitation of Existing Buildings.*[8] ASCE 31 has been successfully balloted as a national standard in accordance with American National Standards Institute (ANSI) rules. FEMA 356 is still being amended and balloted as a pre-standard.

Most government agencies allow for and encourage owners to voluntarily retrofit vulnerable existing buildings. However, generally only the most enlightened or risk-adverse owners with long-term interests in their investments embark on seismic retrofits, often in conjunction with major alterations. Since standards for retrofits have not been adopted by most government agencies, a variety of levels of improvement in seismic safety have occurred in those few buildings that have been voluntarily retrofitted. In some cases, designers and contractors provide only partial retrofits with variable benefits to unsuspecting owners. In other cases, designers and contractors provide far more than would otherwise be required by the IEBC if it were enacted. Yet building departments typically only ensure that voluntary seismic retrofits will make buildings not substantially less safe than they were prior to the retrofits pursuant to the building code for new construction. This state of affairs in U.S. regulations can leave some owners vulnerable to gaps between reliable practice and the actual marketplace. The lack of uniform retrofit practices has also created difficulties in assessing the performance of retrofitted buildings in past earthquakes. [28]

INTERNATIONAL EXISTING BUILDING CODE APPENDIX CHAPTERS

The following is a brief summary of the types of buildings addressed by each appendix chapter, their retrofit requirements and mitigation progress so far in the State of California.

Chapter 1 – Seismic Strengthening Provisions for Unreinforced Masonry Bearing Wall Buildings

Building System Description

Unreinforced masonry bearing wall buildings typically are composed of two to four layers or wythes of brick masonry. This system was popular because of its superior fire resistance after numerous conflagrations plagued wood-framed downtowns throughout the U.S. in the late 1800's and early 1900's. Masonry walls were designed to provide fire separations between adjacent buildings. Roofs and floors were typically composed of wood framing. This system predominated commercial, industrial, urban residential and mixed use construction throughout California from the mid 1800's to the 1930's. Modern variations of this building system continue to be built in other parts of the U.S. today.

After the poor performance of these buildings in the 1906 San Francisco Earthquake, some cities began to impose wind force requirements on their design. In the aftermath of the 1933 Long Beach Earthquake, California passed laws called the Riley Act and Field Act that eventually led to a ban on this system of construction for new buildings. However, other states continued to allow forms of this construction.

These buildings are responsible for the most deaths in past earthquakes both in the U.S. and worldwide, due to falling hazards in moderate shaking and collapse in severe shaking. The tops of the walls, or parapets, can topple onto adjacent property, and floor and roof framing can eventually lose their supports.

Retrofit Requirements

Appendix Chapter 1 of the IEBC is intended to reduce the risk of life loss or injury but not necessarily prevent such losses. This is a distinctly lower purpose than articulated by U.S. building codes for new construction. The chapter contains requirements for materials testing, information that must be included on construction plans, quality control, analysis methods and connections.

Building material testing requirements include procedures tailored to common masonry configurations and are designed to estimate the strength and consistency of mortar between the masonry units. Quality control requirements define the minimum number of tests and inspections. Most of the provisions are written for fired clay brick, but some guidance for unburned clay, adobe, or stone masonry is also provided.

The structural analysis requirements are based on reduced seismic forces from those intended for new construction. Special analysis procedures are included to account for the displacement of flexible diaphragms and rocking of masonry wall piers. Where existing walls are not capable of resisting design forces they are typically supplemented with new elements. Requirements for strengthening include minimum spacing for new connections, bracing of tops of walls or parapets, and independent secondary columns to support gravity loads from trusses and beams.

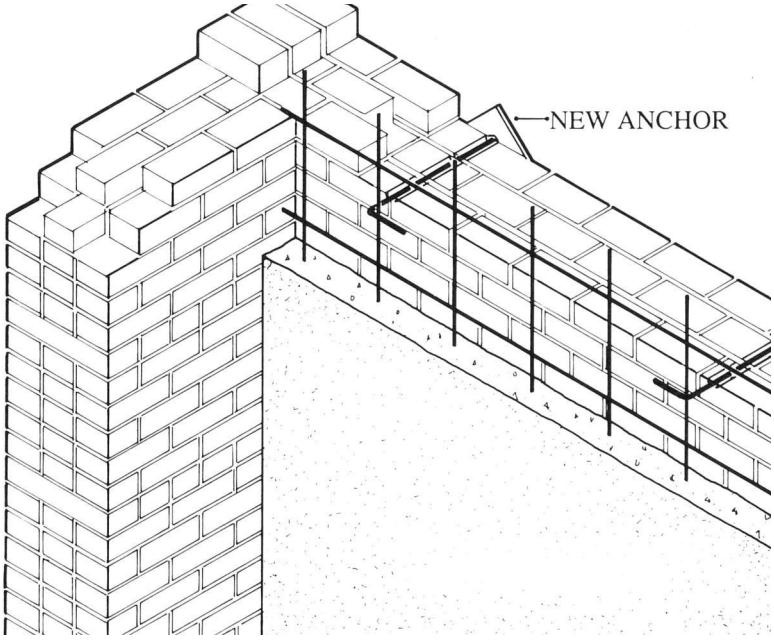

Figure 1. New reinforced concrete (shotcrete) added to existing unreinforced masonry. [25]

Retrofit Progress in California
In 1986, with the leadership from several pioneering local governments, most notably Los Angeles, the State of California enacted a law requiring other local governments in high-seismic regions to inventory URM buildings and create risk reduction programs. To date, 169 local governments and the State of California have adopted retrofit requirements with standards based on or similar to those in the UCBC Appendix Chapter 1. Unfortunately, the standards currently adopted by many government agencies are out-of-date. Although state law requires the adoption of current model codes, this law is not widely enforced. About 8,600 URM buildings have been retrofitted to these requirements or similar earlier editions and local ordinances. Another 4,600 URM buildings have been partially retrofitted or fully retrofitted to other standards. 3,500 have been demolished. Local governments in California's highest seismic region have identified another 8,700 buildings that remain unretrofitted.[9]

Costs for complying with these requirements vary greatly but average around $30 U.S. per square foot of floor area in California. For complex or historically sensitive projects, costs can be many more times as expensive.

Chapter 2 – Reinforced Concrete or Masonry Wall Buildings with Flexible Diaphragms

Building System Description
Since the mid 1900's, reinforced concrete or masonry wall buildings with wood or metal roofs have been common systems throughout the U.S. Concrete walls are either precast on slabs at the construction site and tilted up into place (hence the name "tilt-up") or are vertically cast-in-place. While originally built to codes that required earthquake resistance, most of these buildings contain common flaws at the connections between the walls and the roofs. They rely on wood ledger connections that can split. Nails can also pull out of the edges of the wood framing during earthquakes leading to partial collapses.

Retrofit Requirements
The provisions in Appendix Chapter 2 of the IEBC are intended to reduce the risk of life loss or injury but not necessarily prevent such losses. This is a distinctly lower purpose than intended by U.S. building codes for new construction. The chapter contains requirements for information that must be included on construction plans, as well as materials testing, quality control, analysis methods and connections.

Retrofitted wall anchorage systems that connect walls to floors and roofs are required to resist three-fourths of the loads in the codes for new construction such as the International Building Code.[21]

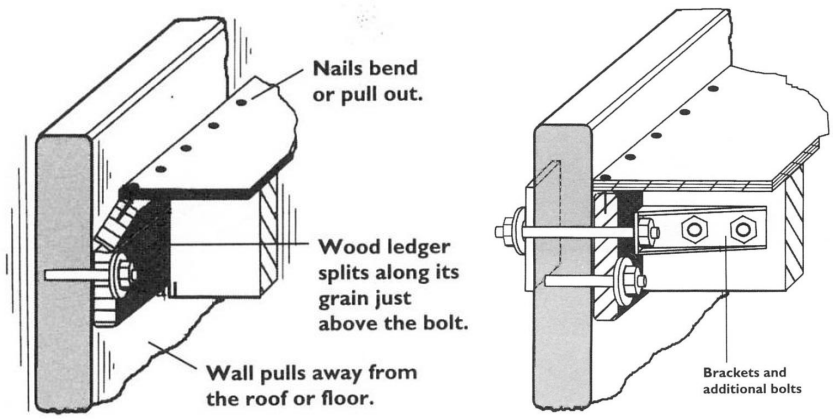

Figure 2. Typical weak wall ledger connection (left) and retrofit (right). [26]

Retrofit Progress in California

The only statewide requirements for these kinds of buildings are laws that encourage sellers to disclose to buyers the typical earthquake weaknesses including weak wall-to-roof connections when such buildings are sold. Many owners have retrofitted their buildings when roofs are replaced or when sold, or as part of risk management programs. A few jurisdictions have mandatory strengthening programs including the City and County of Los Angeles, Fullerton, Hayward, La Palma, and Brisbane. So far, about 2,800 are known to have been retrofitted in these programs.[10] Costs for complying with these requirements can vary somewhat and are on the order of $6 U.S. per square foot of floor area in California.

Chapter 3 – Wood Frame Dwellings with Unbraced Walls and Unbolted Sill Plates

Building System Description

Over 90 percent of all single-family residential dwellings in the western U.S. are made of light wood frame construction that is inherently earthquake-resistant with a few exceptions. Some dwellings have short walls below the first floor designed to provide ventilation under the floor. Around the 1940's and 50's, building codes in the western U.S. began to require bracing of these short walls. Much of the framing constructed before then lack adequate bracing and in some cases lack bolts that attach walls to their foundations. During earthquakes these short walls can collapse and buildings can slide off their foundations rendering them uninhabitable. While they don't pose significant risks to life, estimates of the homeless exceeding 100,000 after major California urban earthquakes make this a critical matter for the overall recovery of damaged regions.[11]

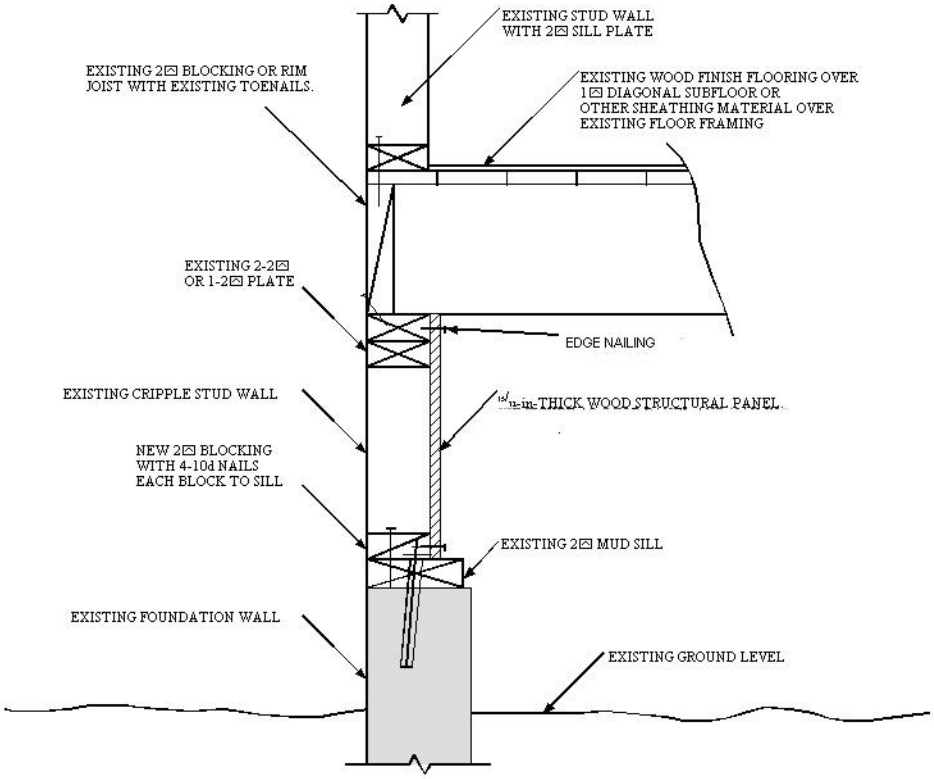

Figure 3. Typical new anchors of sills to foundations and wall bracing. [1]

Retrofit Requirements
The provisions in Appendix Chapter 3 of the IEBC are intended to improve the seismic performance of residential buildings but not necessarily prevent earthquake damage. The requirements are written in such a way that owners or contractors without engineers or architects can undertake these retrofits provided they obtain a building permit. The requirements are based on reduced seismic forces compared to that specified for new construction. Simple details are provided for the most common types of dwellings with regular configurations. Owners desiring retrofits of more complex or irregular dwellings are not eligible to use these details and should obtain the services of design professionals.

The chapter focuses on installing foundations where they are lacking, bracing short walls, and bolting wall sills to their foundations.

Retrofit Progress in California
The state requires sellers of pre-1960 homes to disclose typical earthquake weaknesses to buyers. As a result, many owners have retrofitted their buildings when sold. There are approximately 1.5 million wood frame dwellings suspected of having these vulnerabilities. So far, about 6 percent are estimated to have been retrofitted statewide. In some regions, retrofit rates are as high as 10 percent such as the San Francisco Bay Area. [10][11]

Costs for complying with these requirements vary greatly but average around $2000 U.S. for do-it-yourself projects to $25,000 U.S. for complex projects with hired contractors.[22]

Chapter 4 – Multi-unit, Wood frame Residential Buildings with Soft Stories or Open Fronts

Building System Description
Prior to the mid 1980's, building codes allowed the construction of multi-unit, wood-frame dwellings with irregular configurations that can perform poorly in earthquakes. Vulnerable building configurations such as soft stories, weak stories or open fronts can pose risks of collapse if they were not properly designed or built. For example, in the 1994 Northridge Earthquake, 16 lives were lost in one such apartment complex. It had parking stalls for cars at the first floor that resulted in a soft story configuration due to the lack of solid walls. Inadequate attachments at the base of the walls also contributed to the collapse. Nine months after the earthquake, 253 apartment and condominium buildings still remained vacant throughout the City of Los Angeles creating blight.[23] Studies suggest that the loss of habitability after future California earthquakes in urban regions will be dominated by the poor performance of such apartments and condominiums.[11]

Retrofit Requirements
The provisions in Appendix Chapter 4 of the IEBC are intended to reduce the risk of death or injury and improve the seismic performance of residential buildings but not necessarily prevent earthquake damage. The requirements provide ways to identify soft, weak or open front buildings and describe simple measures to design retrofits that reduce these vulnerabilities. The chapter lists information required on construction plans, simple analysis methods, and ways to tie parts of the buildings together.

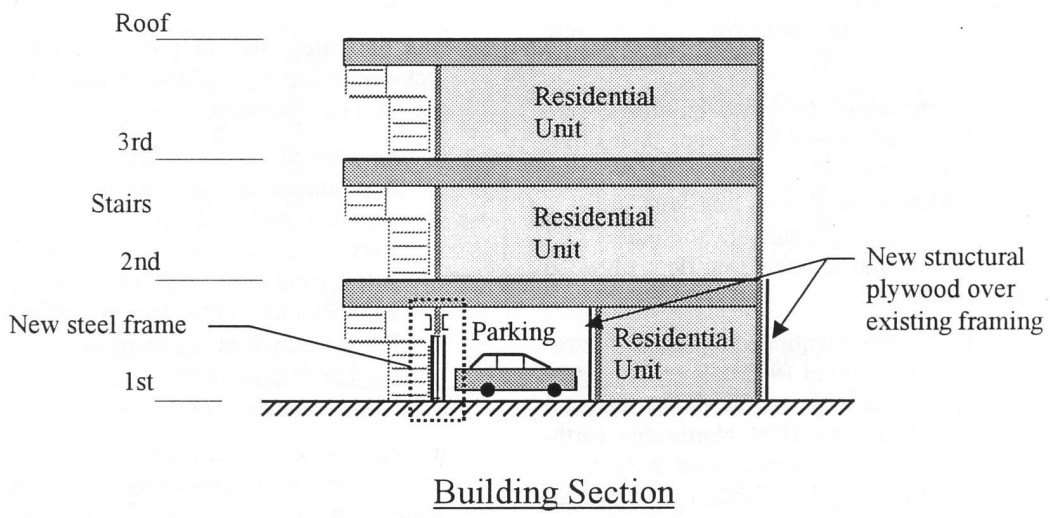

Figure 4. Typical soft story apartment retrofit approach. [27]

Retrofit Progress in California
There are no statewide requirements for this type of building system. California has approximately 360,000 apartment buildings with 5.7 million units. The City of Santa Monica requires retrofitting of these types of buildings. The Cities of Fremont and Los Angeles have enacted voluntary retrofit ordinances.[10] Costs can typically range from $5,000 to $9,000 U.S. per living unit.[12]

Chapter 5 – Non-ductile Concrete Buildings and Concrete Buildings with Masonry Infill Walls

Building System Description
Prior to the mid 1970's, building codes allowed the construction of concrete buildings with not enough steel reinforcement to confine the concrete and keep it from collapsing. This type of building represents the fastest growing earthquake risk to life worldwide.[13] In many countries it surpasses the risk posed by unreinforced masonry buildings. In the U.S., rarely are these buildings constructed without solid concrete or masonry walls, so the complex interaction between beams, columns, walls and floor framing is critical to the overall performance of these systems. On the one hand, concrete buildings with plenty of well-detailed walls are known to perform quite well in earthquakes. On the other hand, concrete buildings that lack reinforcement, walls or have poor connections can pose distinct risks of collapse.

Retrofit Requirements
The provisions in Appendix Chapter 5 of the IEBC are intended to reduce the risk of life loss or injury, but not necessarily prevent such losses. This is a distinctly lower purpose than intended by U.S. building codes for new construction. Unlike Chapters 1 through 4, Chapter 5 provides less guidance on detailing and more guidance on analytical methods. Three methods are included for evaluating the performance of concrete buildings: The Coefficient Method such as FEMA 356, the Capacity Spectrum Method, and the Pseudo-nonlinear Dynamic Analysis Method also known as the Secant Stiffness Method. The Chapter includes a checklist that can be used to identify seismic vulnerabilities in existing concrete buildings.

Figure 5. *New steel brace added to an older concrete building. [25]*

Retrofit Progress in California
There are no statewide requirements for this type of building system. California has approximately 40,000 such buildings, and relatively few have been retrofitted. However, the Cities of Long Beach, Los Angeles, Fremont, Palo Alto, and Petaluma have undertaken significant retrofitting efforts in buildings of this type. Costs can be comparable to URM retrofit costs. [10]

RECENT EFFORTS TO APPLY AND UPDATE THE IEBC

Recent International Code Council Actions

Most local building officials are still not entirely familiar with the newly published International Existing Building Code. At a recent hearing of the International Code Council, it agreed to reduce references made to the IEBC in the International Building Code since many building officials around the nation expressed concerns that they were "not ready" to enforce the IEBC and face the complaints from owners.[14] In the meantime, many building officials will, on a case-by-case basis, use the IEBC as an discretionary resource.

Recent California Building Official Efforts

The California Building Official's Emergency Preparedness and Seismic Safety Committees are drafting a recommended model ordinance for the demolition and repair of disaster-damaged buildings. Once CALBO's committees develop a consensus, CALBO will recommend to local governments that they adopt the model ordinance. Much of the language for this ordinance will be derived from Chapters 1, 2, and 4 of the International Existing Building Code. Once a consensus is achieved, it will appear on CALBO's website at www.CALBO.org

In a parallel effort, local building officials in the San Francisco Bay Area are developing generic, pre-engineered retrofit plans and details for common wood frame dwellings. These are expected to be consistently adopted and maintained by the building departments in the Bay Area region. They are based in part on Appendix Chapter 3 of the IEBC (www.icbopeninsula.org).

Recent SEAOC Existing Buildings Committee Efforts

In late 2003, SEAOC's Existing Buildings Committee completed commentaries on each of the five appendix Chapters of the IEBC. These commentaries describe the rationale for key code requirements and reference applicable research and related publications. The International Code Council plans to publish them in 2004 in a companion document to the IEBC to help explain the thinking behind the provisions.[15]

The Committee is also developing a number of code change proposals to update the requirements in the five chapters and bring them more into alignment with the IBC. The proposed code changes will be shared with the National Council of Structural Engineers Associations' Existing Buildings Committee for its review and comment before they are submitted to the ICC in August 2004.

Calibration with Performance Based Earthquake Engineering Techniques

A long-term goal of the SEAOC Existing Buildings Committee is to calibrate and update each Appendix Chapter using Performance Based Earthquake Engineering (PBEE) analysis approaches such as ATC 55[16], FEMA 356 and ATC 40. Efforts are already underway to familiarize practicing engineers with nonlinear analysis methods and benchmark, compare and contrast the results generated by different methods. While most simple retrofit projects do not warrant extensive PBEE analysis, the Committee believes that sample buildings can be evaluated using the more sophisticated methods. These efforts can help calibrate future code change proposals while still retaining simplicity in requirements for ease of use by building officials and design professionals whom are not necessarily skilled in PBEE.

The Committee is also examining the results of the CUREE Wood Frame Project[17] to identify refinements for Chapters 3 and 4 that can be justified by its research. Similarly, as FEMA 356 is successfully balloted, and the efforts of ATC 55 and later research become available, the Committee expects to take steps to package and incorporate key research results into practical retrofit requirements for narrowly-defined building types with common vulnerabilities.

Model for World Housing Encyclopedia

The World Housing Encyclopedia [24] has identified common building types and their vulnerabilities. If widespread retrofit practices have not yet been created, each country should consider making efforts to establish new organizations or charge existing organizations or committees to develop accepted practices for the seismic evaluation and retrofit of these buildings. Such an effort requires extraordinary communication and collaboration between government code enforcers, practicing engineers, and researchers. To the extent that the international earthquake engineering profession can share these efforts with other countries and leverage research and code developments, we should attempt to do so.

CONCLUSIONS AND RECOMMENDATIONS

Simple-to-use requirements for retrofitting common building types can help at-risk communities identify and reduce typical earthquake vulnerabilities. Other countries might find adaptable to their circumstances the U.S. system of developing retrofit standards that relies on committees of volunteer engineers and building officials. Earthquake engineering professionals and government code enforcers should work together to develop accepted practices for the seismic evaluation and retrofit of common building types.

REFERENCES

1. International Code Council. *International Existing Building Code,* 2003 Edition. www.iccsafe.org

2. International Conference of Building Officials. *Uniform Code for Building Conservation.* 1987 to 1997 Editions.

3. Structural Engineers Association of California. *Commentary on Appendix Chapter 1 of the Uniform Code for Building Conservation.* ICBO, 1992. www.seaoc.org

4. California Seismic Safety Commission. *Recommended Model Ordinance for the Seismic Retrofit of Hazardous Unreinforced Masonry Bearing Wall Buildings.* 1985 to 1995 Editions, CSSC 95-04. www.seismic.ca.gov

5. California State Historical Building Safety Board. *California Historical Building Code*, 2001. www.dsa.dgs.ca.gov/StateHistoricalBuildingSafetyBoard/2001chbc.htm

6. International Conference of Building Officials. *Guidelines for the Seismic Retrofit of Existing Buildings.* 2000. www.iccsafe.org

7. American Society of Civil Engineers. *Seismic Evaluation of Existing Buildings*, ASCE 31-03, 2003. www.asce.org

8. Federal Emergency Management Agency. *Prestandard and Commentary for the Seismic Rehabilitation of Buildings,* FEMA 356. 2000. www.fema.gov

9. California Seismic Safety Commission. *Status of the Unreinforced Masonry Building Law,* CSSC 2003-03 www.seismic.ca.gov

10. Office of Emergency Services. *Draft Statewide Multi-hazard Mitigation Plan.* Unpublished, 2004.

11. Association of Bay Area Governments. *Preventing the Nightmare: Designing a Model Program to Encourage Owners of Homes and apartments to do Earthquake Retrofits,* 1999.

12. City of San Jose, Residential Seismic Safety Program. Practical Solutions for Improving the Seismic Performance of Buildings with Tuckunder Parking, 2000.

13. Coburn, Andrew, and Spence, Robin. *Earthquake Protection, Second Edition.* John Wiley and Sons, 2003.

14. International Code Council *Building Safety Journal,* November 2003.

15. Structural Engineers Association of California Existing Buildings Committee. *Commentary on the Guidelines for the Seismic Retrofit of Existing Buildings,* 2004. http://www.seaoc.org/Pages/committees/extbldg.html

16. Applied Technology Council. *ATC-55 Project: Evaluation and Improvement of Inelastic Seismic Analysis Procedures* 2003, http://66.47.49.1/atc/atc55.htm

17. Consortium of Universities for Research in Earthquake Engineering. *Wood Frame Project,* 2003. www.curee.org

18. International Code Council. *Adoption by State, Adoption by Jurisdiction,* 2004. http://www.iccsafe.org/cs/adoptions/jurisdictionadoptions.xls

19. City of Los Angeles. *Division 88 Earthquake Hazard Reduction in Existing Buildings,* 1981.

20. International Conference of Building Officials. *Uniform Building Code,* 1994 Edition.

21. International Code Council. *International Building Code,* 2003 Edition. www.iccsafe.org

22. California Seismic Safety Commission. *Homeowner's Guide to Earthquake Safety.*CSSC 2002-04 www.seismic.ca.gov

23. California Seismic Safety Commission. *Turning Loss to Gain: Report to the Governor in Response to Executive Order W-78-94,* CSSC 1995-01. www.seismic.ca.gov

24. World Housing Encyclopedia. www.world-housing.net/

25. Bay Area Earthquake Preparedness Project. *Seismic Retrofit of an Unreinforced Masonry Building, Seismic Retrofit of a Concrete Flat Slab Building, Hazardous Buildings Case Studies,* 1986.

26. California Seismic Safety Commission. *Commercial Property Owner's Guide to Earthquake Safety.* CSSC 1998-01, www.seismic.ca.gov

27. City of San Jose, Residential Seismic Safety Program. *The Apartment Owner's Guide to Earthquake Safety,* July 1998. http://www.ci.san-jose.ca.us/oes/Brochures/apartment.pdf

28. Applied Technology Council. *Evaluation of the Performance of Seismically Retrofitted Buildings,* 1992. www.atcouncil.org