13th World Conference on Earthquake Engineering
Vancouver, B.C., Canada
August 1-6, 2004
Paper No. 1459

SEISMIC RESPONSE OF BRACED FRAME CONNECTIONS

Dawn LEHMAN[1], Charles ROEDER[2], Jung Han YOO[3], Shawn JOHNSON[4]

SUMMARY

Seismic response of braced frames largely depends on the response of braces. In high seismic zones in the United States, two systems are currently being used; special concentrically braced frames (SCBF) and concentrically braced frames with buckling restrained braces (BRCBF). Braces in SCBF systems develop their inelastic action through compressive buckling and tension yielding. Buckling restrained braces (BRB) are encased in an unbonded, stiff material that restricts brace buckling and they develop their ductility through compression and tension yielding. In both types of systems gusset plate connections are used to connect the brace to the framing elements. These different systems place different demands on the connection by the brace depends on the brace type. Braces in SCBF systems place large axial and out-of-plane rotational demands on the brace as a result of brace buckling. The stiffness of BRB can result in large in-plane moment and axial force demands. The connection design must account for these different demands.

Current seismic design practice requires that the axial capacity of the connection exceeds the axial capacity of the brace. However, this requirement does not account for flexural or rotation demands. In addition, this requirement neglects the improved seismic behavior afforded by controlled yielding of the connection. A new design methodology is proposed to improve the response of the connection, which will improve the seismic performance of braced frame systems. The design procedure balances secondary yield mechanisms in the connections and framing elements with the controlling yield mechanism of the system, inelastic action in the brace. Failure modes in all components of the system are carefully balanced with the controlling yield mechanism. More ductile failure modes are also balanced with the yield mechanisms and brittle failure modes are prevented using prescriptive details.

A research program is being conducted to develop and validate these balanced design procedures. Initially, previous research results were gathered to determine the yield mechanisms and failure modes and evaluate current practical models used to predict the associated capacities. An analytical study is being conducted to evaluate measured to improve the performance of the connection. An experimental program has been developed to evaluate and verify the improved connections and proposed design methods.

[1] Assist. Professor, University of Washington, Seattle WA, 98195, E-mail: delehman@u.washington.edu
[2] Professor, University of Washington, Seattle WA, 98195, E-mail: roeder@u.washington.edu
[3] Graduate Student Researcher, University of Washington, Seattle WA, 98195
[4] Graduate Student Researcher, University of Washington, Seattle WA, 98195

INTRODUCTION

Steel concentrically braced frames (CBFs) are stiff, strong structures which makes them able to economically resist elastic seismic demands. For more robust seismic resistance, special concentrically braced frames have been developed. In special concentrically braced frames (SCBFs) the brace provides significant lateral stiffness to the steel frame, which attracts large axial forces during earthquake loading and develops the majority of their cyclic inelastic deformation capacity through post-buckling deformation. Typical brace post-buckling behavior is illustrated in Fig. 1. Axial demands cause the brace to buckle in compression and yield in tension, as illustrated in Figs. 1a and 1b and plastic hinges form within the length of the brace after buckling as a result of second-order effects. These hinges can cause permanent plastic deformations and deterioration of resistance in the brace, as seen in Figure 1a, which requires significant axial deformation to achieve the full tensile stiffness and resistance of the brace (as shown in Zones B-C, C-D and D-E). This behavior leads to one-sided axial force-deflection behavior of the braced seen in Fig. 1a. To mitigate this mechanism, SCBFs use braces in opposing pairs. The inelastic hysteretic behavior of a pair of braces illustrated in Fig. 1c.

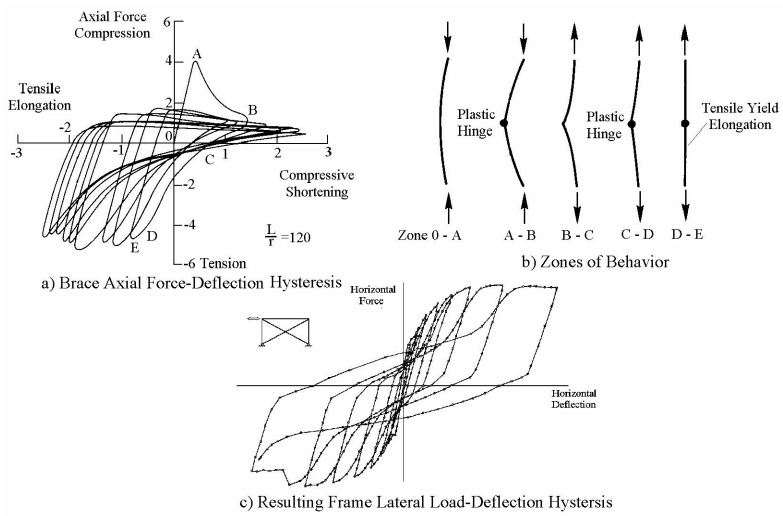

Figure 1 Behavior of Special Concentrically Braced Frames (Popov et al. 1976)

To minimize the pinched hysteretic behavior shown in Fig. 1a and 1c and the resulting strength deterioration, buckling-restrained concentrically braced frame systems (BRCBFs) have been developed. Buckling restrained braces are patented braces where the axial member yields in tension and compression without brace buckling. This is accomplished by encasing the slender brace bar with concrete or other fill within the tube to prevent lateral deformation and buckling; the stiff encased material is treated such that the brace does not bond to the encasing material. The resulting brace can tolerate large inelastic axial deformations, as shown in Figure 2. A significant body of research (Clark et al. 2000, Ando et al. 1993, Connor et al. 1997, Inoue et al. 2001) has been completed on their performance, but this research has primarily focused on axial load and deformation capacities of isolated braces. This idealized performance requires true truss behavior of the brace (i.e., the brace does not sustain an end moment). However, if end moments result, the demands on the connection may exceed its capacity and the resulting performance may not meet the original design objectives.

Braces are normally joined to the beams and columns of the braced frame using gusset plate connections. For SCBF systems, the post-buckling behavior of the brace places significant cyclic load and deformation demands on these connections. These demands depend on the mode of buckling, in-plane or out-of-plane. For example, the deformed shape shown in Zone A-B of Fig. 1b results in significant end rotations which must be sustained by the connection. The gusset plate connection behavior depends on the strength and stiffness of the plate relative to the brace. Theoretically, the brace and the gusset plate will straighten on

load reversal (Zone B-C and C-D of Fig. 1b) but this has not always occurred in practice and large end rotations can occur during inelastic seismic deformations. Reliable design provisions must account for these demands. However, the AISC Seismic Design Requirements for the SCBF system (AISC 2002) only considers the axial demands directly, requiring that the tensile capacity of the connection be designed to be stronger than the brace capacity; geometric limits are established to accommodate the expected out-of-plane end rotation. The frame performance suggests the improved connection design philosophies based on more realistic estimates of the connection demands and properties may lead to improved braced frame response.

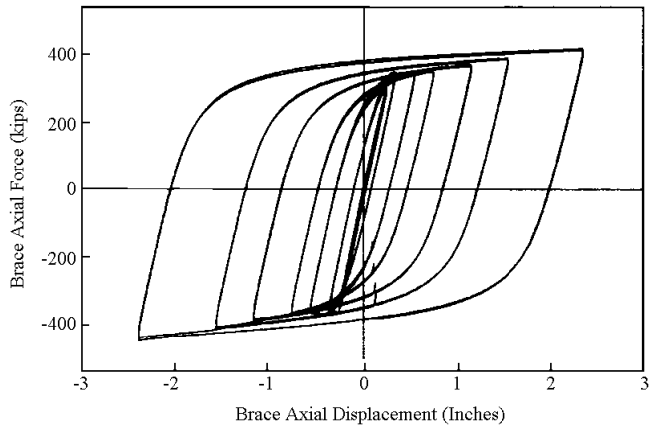

Figure 2 Axial Force-Deformation Response of an Unbonded Brace (Clark et al. 2000)

As with SCBFs, the seismic performance of BRCBFs also depends on the connection design. BRCBF connections must support the full tensile and compressive force capacities of the brace during cyclic inelastic deformation cycles. The connection must have adequate stability and lateral restraint to prevent out-of-plane deformation, and it clearly cannot buckle or fracture prior to the development of the full resistance and ductility of the brace if the idealized behavior is to be achieved. Rotation or out-of-plane deformation of the BRCBF connection cannot be tolerated, because these actions may restrict development of system resistance and ductility. However, limited yielding in the connection may be acceptable under extreme conditions. Design and analysis of BRCBF systems is complicated by the differences between the assumed and actual frame behavior, as depicted in Fig. 3. Buckling-restrained braces have large axial deformation capacity, which is advantageous in meeting to seismic design requirements if the beam-column joints respond as pinned joints as illustrated in Fig. 3b. However, for connections with rotational stiffness, the flexural stiffness of the buckling-restrained brace, including the moment of inertia of the surrounding tube, must be considered. As a result, the deformations of the frame may result in significant bending moments in the gusset plate and the buckling restrained brace due to flexural deformation of the frame as depicted in Fig. 3c. The inelastic deformation demands of the BRCBF may place large stress and strain demands on the gusset plate connection. These demands are not considered in the connection design and the resulting deformation and strength capacities may be inadequate.

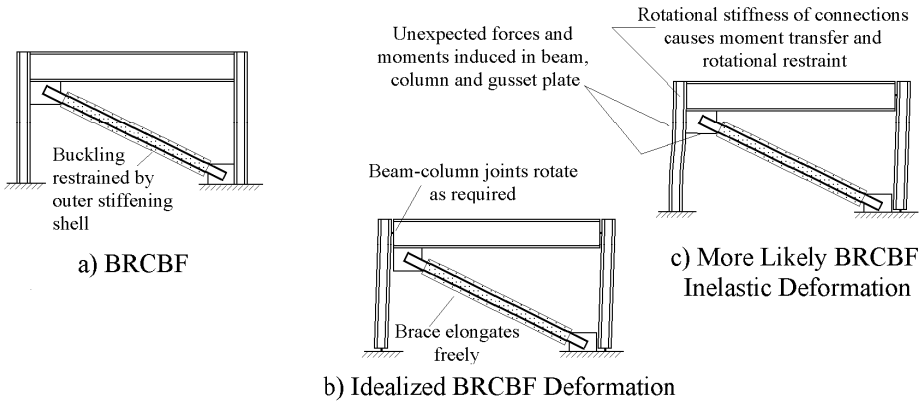

Figure 3 Deformation Mechanisms of BRCBF systems

IMPROVED SEISMIC DESIGN METHODOLOGY

Steel frames have multiple yield mechanisms where the resistance of each yield mechanism is the resistance at which yielding and stiffness changes are initiated. Controlled yielding of both connections and framing elements can contribute to the strength, stiffness, energy dissipation, and inelastic deformation capacity of steel framing systems, and development of multiple participating yield mechanisms may be desirable for good seismic performance. Proper balance of the yielding conditions and mitigation of undesirable failure modes can ensure this participation. Therefore, a well-balanced design which directly considers the connection properties and maximizes the inelastic deformation capacity is desired.

To meet these objectives, a seismic design methodology based on balancing the yield mechanisms and preventing undesirable failure modes is under development for SCBF systems. In traditional seismic design, plastic design principles are used and the elements are designed to meet the elastic force demands. The specific elements that are expected to yield are designed to sustain inelastic action. Capacity design principles are used to design the adjacent, and presumably non-yielding, elements such that they are stronger than the yielding elements.

The balanced design approach is similar to traditional seismic design methods in that the framing elements are designed to meet the elastic force demands and specific elements are designed to yield to achieve the desired plastic mechanism of the system. However, in contrast to traditional design, in a balanced-design approach, secondary yield mechanisms are permitted to develop at large ductility demands in other elements (such as the connections) as well as the primary yielding element. Further, proportional separation is provided between desirable and less desirable behaviors to reduce the probability of less acceptable yield mechanisms and failure modes occurring. The design is balanced such that the yield capacity of the primary element is less than the yield capacity of the secondary yield mechanisms. However, with increased deformation demands and strain hardening in the primary member, the secondary yield mechanisms may develop and contribute to inelastic deformation capacity. Numerous secondary yield mechanisms, such as yielding of the gusset-plate connections and framing elements for CBF, are possible.

Relative to the strength of the primary yield mechanism, a balance factor, β, is used to increase the strength of the secondary yield mechanisms to achieve the balance state. The nominal yield resistances are designated R_{yield}. This balanced approach can be expressed using the following inequality:

$$R_{yield\ mean} = R_y R_{yield} \leq \beta_{y\ i} R_y R_{yield,i} \qquad \text{(Eq 1)}$$

Using this inequality for design, the resulting yielding hierarchy would be the primary mechanism followed by *i* secondary mechanisms. The seismic design provisions suggest that the mean yield resistance can be computed by multiplying the nominal yield resistance by a factor, R_y, which is defined in the subject specification AISC (2002). Research shows that permitting the formation of secondary (and subsequent) yield mechanisms increases the deformation capacity of the system and can prevent premature failure of the connection (Roeder 2002).

Development of failure modes causes fracture, tearing, or deterioration of performance. Achieving a single failure mode does not necessarily imply collapse or total failure of the connection; multiple failure modes will usually be required to achieve these extreme conditions. But a single failure mode results in significant, irrecoverable damage to the system. Specimens with a controlling yield mechanism resistance that is similar to (or larger than) the critical failure mode resistance achieve little or no ductility. Since ductile performance is necessary to assure good seismic performance, balance between controlling yield mechanism and critical failure mode resistances is required. As such the balanced design approach also requires that the strength of all identified failure modes, $R_{fail,i}$, exceeds the strength of the primary yield mechanism, as shown in Eq. 2.

$$R_{yield\ mean} = R_y R_{yield} < \beta_{fail,i} R_{fail,i} \text{ and } \beta_{yield} < \beta_{fail} \qquad \text{(Eq 2)}$$

In some cases, prescriptive details may be provided to limit the need to check one or more individual failure modes.

The β factors designed to balance the yield mechanisms and failure modes are similar to the resistance factors, ϕ, in LRFD design (AISC 2001) in that both are no greater than 1.0 and both are based upon the performance and variability of the response mechanism. However, the factors are fundamentally different in that ϕ factors are based upon strength, safety, and statistically extreme considerations, while β values are based entirely upon balancing the expected or average inelastic seismic behavior to meet the inelastic deformation requirements. The required β factor is smaller when a given yield mechanism or failure mode is difficult to predict or has undesirable consequences. Larger β values are appropriate for ductile yield mechanisms or failure modes where the resistance is accurately predicted and/or the consequence of failure is less severe. Balance conditions are used to ensure the desired progression of yielding and to prevent premature and undesirable failure modes. As indicated in Eqs. 1 and 2, appropriate values for β_{yield} factors must be established for each secondary yield mechanism to provide the desired progression of yielding. Appropriate values for β_{fail} factors must be established for each failure mode to assure that the most desirable failure mode occurs and is adequately separated from the initiation of yielding. Different inelastic deformation goals are needed for different structural systems, and as a result, different balance conditions are needed for these alternative systems.

The ductility and inelastic performance of the system is controlled by the combination of the controlling yield mechanism and the critical failure mode, and the proximity of the failure modes and controlling yield mechanism resistance. Some failure modes result in unpredictable performance or more serious consequences than others do, and significant separation between the controlling yield mechanism and these less desirable failure modes is warranted. Systems with a controlling yield mechanism resistance that is significantly smaller than the critical failure mode resistance develop large inelastic deformation and ductility.

In the following sections, the basis of the design methodology is developed for SCBF connections. Initially, the yield mechanisms and failure modes were determined using previous research results. The measured response was used to evaluate current practical models and some improvements of those models are proposed. Improvements to the connection design are explored analytically. Finally a description of a proposed experimental test program to further develop and verify the design procedure is described.

EVALUATION OF PREVIOUS RESEARCH RESULTS

Previous Experimental Research on Gusset Plate Connections

Previous experimental studies have evaluated the response of gusset plate connections. The majority of the studies have evaluated isolated gusset plates subjected to monotonic axial loading; more recent studies have considered cyclic axial loading. Only a limited number of studies have used experimental configurations which simulate the system response and consider realistic demands on the connection. However, these previous studies do provide valuable information regarding the yield mechanisms and failure modes for gusset plate connections and provide a basis for evaluating existing models. The following summarizes the research findings, the response mechanism and the model evaluation.

Monontonic studies on the response of the gusset plate connections include studies by Whitmore (1952), Bjorhovde (1983 and 1985), Hu and Cheng (1987), Cheng et al. 1994, Yam (1994) and Yam and Cheng (2002). Whitmore investigated the stress distribution in gusset plate connections and proposed a method to estimate an equivalent uniform stress distribution; this method provides the basis of current models to assess plate buckling. In addition to model development, the studies have demonstrated the failure modes for gusset plate connections. For plates loaded in tension, primary failure modes include block shear and net section tensile fracture (Chakrabarti and Bjorhovde (1983) and Hardash and Bjorhovde (1985). Under compressive loading, most plates failed due to elastic or inelastic buckling (Hu and Cheng 1987, Brown 1988)

Although the majority of cyclic tests on braced frame components have focused on the brace member behavior, a number of tests have studied the behavior of gusset plate connection. Similar failure modes were noted for the connections subjected to cyclic load as those noted for the monotonic tests. In addition, the cyclic studies have begun to evaluate the influence of the connection on the brace. For example, research by Astaneh-Asl *et al*. (1982) and El-Tayem *et al*. (1985) shows that in addition to the slenderness ratio for the brace, the buckling strength of the brace also depends on the connection properties.

To develop the proposed balance design procedure, the controlling yield mechanism, secondary yield mechanisms, and failure modes must be identified. Figure 4 illustrates the yield mechanisms and failure modes for SCBF systems which were identified using these and other past experimental research results. For a SCBF, the controlling yield mechanisms should be inelastic shortening due to post-buckling deformation of the brace and tensile yielding of the brace. For a BRCBF system, the controlling yield mechanisms are tensile and compressive yielding of the brace. At large drifts, limited local yielding of the gusset plate may be a tolerable secondary yield mechanism, since this may improve economy and increase the inelastic deformation capacity. Additional secondary yield mechanisms include yielding of the framing elements (beams and columns) and elongation of the bolt holes. Inelastic deformation of the framing elements has been noted in experimental studies, but its contribution to SCBF frame deformation capacity is not fully understood. More ductile failure modes include buckling of the gusset plate, bolt bearing or block shear and excessive plastic deformation of the brace, which may ultimately lead to fracture or tearing. Brittle failure modes include net section fracture of the brace or gusset plate, fracture of the gusset plate welds, and shear fracture of the bolts.

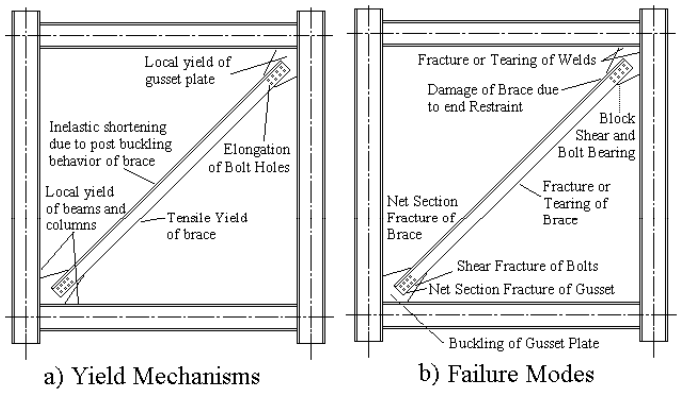

Figure 4 Yield Mechanisms and Failure Modes for SCBF Systems

These mechanisms and failure modes were used to develop the balance equations as indicated in equations 1 and 2. Additional estimates and further discussion of the proposed balance equations and parameters may be found in (Roeder et al. 2004).

Evaluation of Existing Design Models for CBF Systems

To develop the balance procedures, the existing experimental research results were used to evaluate existing methods to predict brace buckling, gusset plate buckling, and tensile failure modes of the gusset plate. A summary of the important finding are presented. For all results the measured response is normalize to the calculated resistance, which indicates that models with an average normalized ratio less than one are conservative. The evaluation results provide the basis to develop initial estimates of β values for the balancing procedure. The following summarizes the research findings related to the model evaluation.

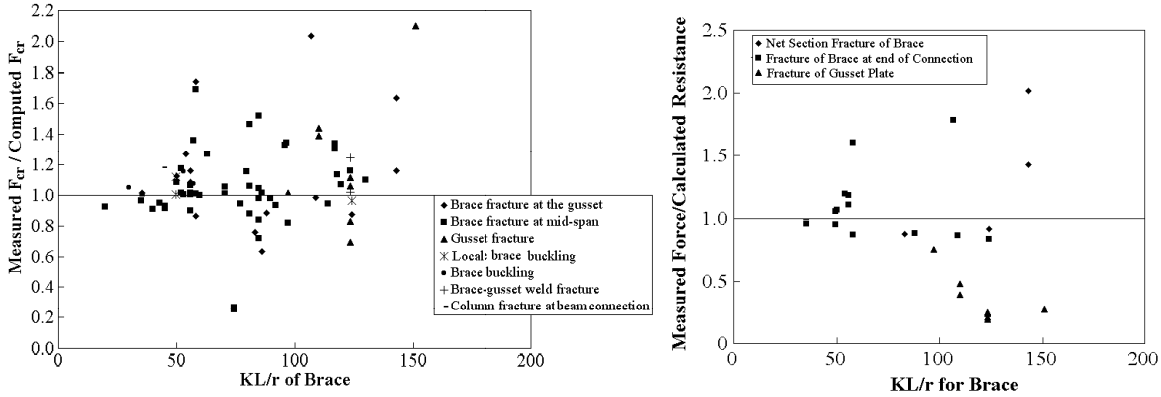

Figure 5 Comparison of Measured and Predicted Brace Buckling Loads

The measured response of brace buckling experiments was used to evaluate current AISC design expressions (AISC 2002). Only tests with adequate data to describe the buckling load, test specimen geometry, materials, and boundary conditions. Figure 5a shows the measured strength measured strength normalized to the predicted resistance as a function of the slenderness ratio of the brace. The results in Figure 5a show that there is a large amount of scatter in the predicted buckling resistance. It is likely that this inaccuracy is largely caused by uncertainty in the effective length coefficient, K, of the brace rather than uncertainty in the AISC design equations. As indicated by the experimental research findings (e.g., Astaneh-Asl *et al*. (1982), El-Tayem *et al*. (1985)), the brace buckling strength (and therefore K-factor) depends on an accurate assessment of the end restraint which depends on the gusset plate connection stiffness and restraint. A more accurate estimation of this buckling load is needed to establish the balance

conditions required for ductile performance, and therefore procedures to predict accurately the connection properties and their impact on brace buckling are required.

Simple models for predicting the resistance and behavior of important tensile failure modes are also required. Figure 5b compares the ratio of the measured and computed resistances obtained for several tensile failure modes as a function of brace slenderness. The experimental results show that fracture occurred at the end of the brace in a number of past experiments. Typically brace fracture occurred adjacent to the gusset plate connections for specimens where large plastic deformation in the brace resulted from brace buckling. The measured strength was compared with the calculated resistance for this failure mode was the computed buckling capacity of the brace (AISC 2002). The results, shown in Fig. 5b illustrate that on average very slender braces did not meet the calculated resistance. Therefore, mitigation of this particular failure is likely to be satisfied by assuring that the SCBF brace meets the local and global slenderness requirements of AISC Seismic Design Specifications (AISC 2002), since these limits are intended to avoid concentration of damage due to buckling deformation.

The results in Figure 5b indicate that fracture of the gusset plate is not well predicted which may be a function of the difference in the design expression and failure modes. The design expression is based on the expectation that the fracture occurs in the net section of the gusset at the last row of bolts, but most of the reported failures initiated near the weld of the gusset plate to the beam flange. Clearly additional work is needed to address these important failure modes.

The primary failure mode associated with compressive loading is plate buckling. Several models have been developed to predict the buckling capacity of gusset plate connections. Originally, the plate capacity was assessed using the Whitmore method with a 30° distribution angle. Others, (e.g., Brown (1988) and Astaneh-Asl (1989)) have proposed models based on an unsupported edge length combined with an effective width estimate.

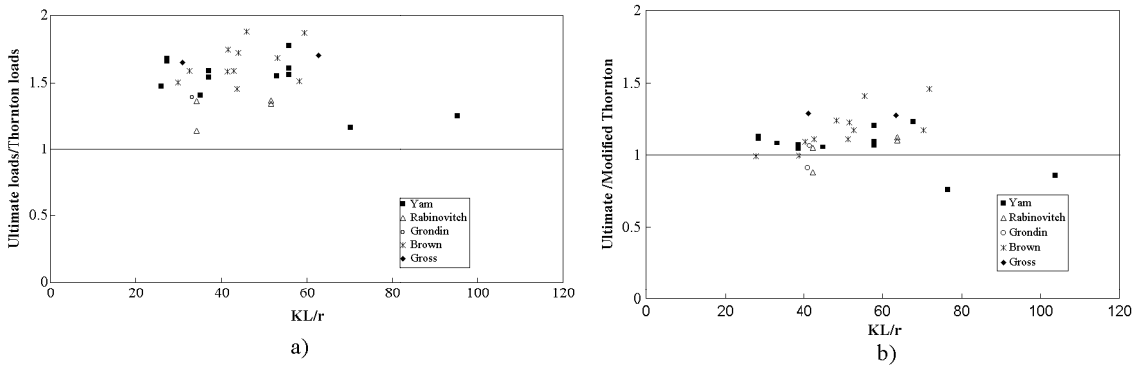

Figure 6 (a) Thornton and (b) Modified Thornton Models as a Function of Plate Slenderness Ratio

Thornton (1991) adapted the Whitmore model in combination with an effective length factor to calculate a critical buckling load where the gusset plate is treated as an imaginary strip column with the rectangular cross section defined by the Whitmore width. The length was the average of three measured lengths from the centerline of the last row of bolts as shown in Fig. 8a. The effective length coefficient of 0.65 is used. The Modified Thornton method was proposed as an improvement to the Thornton method and uses a Whitmore width that is defined by a 45° projection angle (Yam 2002). The Thornton and Modified Thornton models are most commonly used in current practice. Figure 6 compares the measured and predicted responses for each model. The Thornton conservatively estimates the gusset plate buckling capacity; the Modified Thornton method is also on average conservative but the conservatism is less

extreme. To develop a robust balanced equation, undue conservatism is not desirable because it leads to erroneous estimates of the failure mode and erroneous predictions of the structural performance. The Modified Thornton Model represents a good starting point for development of a balance procedure but further improvements to this model are needed. However, the prediction with the modified Thornton model is not conservative in a few specimens with slender gusset plates and this finding must be accounted for in the design equations.

Additional failure modes include bolt shear, bolt bearing, and block shear failures; all are clearly important. However, few gusset plate connection experiments have seldom demonstrated these failure modes. Additional research is required to develop expressions to evaluate these failure modes. For a more detailed discussion of the results, the reader is referred to Roeder et al. (2004).

IMPROVEMENTS FOR GUSSET PLATE CONNECTIONS FOR CBF SYSTEMS

Previous Analytical and Experimental Research Results

In addition to evaluating the response of the connections, several researchers have investigated measures to improve their behavior. Primary variables studied have included the plate geometry, plate thickness, thickness of the splice plate, and free edge stiffeners. Both experimental and analytical investigations have been conducted.

Several researchers have evaluated the influence of free-edge stiffeners on the response of gusset plate connections. Grondin *et al.* (2000) evaluated the effect of free edge stiffeners and gusset plate-brace member interaction on their cyclic behavior and strength. The results showed that free edge stiffeners improved the compressive response. Walbridge *et al*. (1998) investigated the behavior of gusset plate-brace member assemblies analytically. The results also showed that gusset plate edge stiffeners reduced the rate of decay of the post-buckling load. Analytical research by Sheng *et al*. (2002) also indicated that free edge stiffeners improve the behavior of the compressive response of the connection under cyclic loading.

The effect of gusset plate thickness, geometry, boundary conditions, eccentricity and reinforcement were investigated experimentally and analytically. Tests show that thin gusset plates tend to buckle at a load much lower than the yield load using a strict Whitmore prediction. Rotational restraint at the connection of brace member and gusset plate affected the buckling strength of the gusset plate significantly.

Cheng *et al*. (1994) conducted analytical studies and confirmed that the elastic buckling strength of the specimen increases with an increase in the splice member connection length or splice member thickness, Based on this finding the researchers suggested that the splicing member should always be fully extended to the beam and column boundaries. Yam (1994) and Yam and Cheng (2002) also conducted a numerical analyses and found that thicker and longer splice members increased the buckling capacity of gusset plate connections.

Simulation of Local Connection Behavior

To further evaluate the potential improvements in the response, preliminary, elastic simulations of the connection behavior were performed using the analysis software package ANSYS. The study extended the previous findings by examining the effects of combined axial and moment demands.

To evaluate the response of the connection, an experimental specimen from the study conducted by Rabinovitch and Cheng (1993) was used. The specimen consisted of 550 mm x 450 mm x 6.18 mm gusset plate with two WT125 mm x 22.5 mm T-shaped splice members and two 10-mm thick plates. In the analytical model, a three-dimensional mesh of shell elements was used to model the gusset plate, splice members, and doubler plates on both sides of the gusset plate. Coupled degrees of freedom were used to simulate the bolted connection between the gusset plate and splice members. The edge of the plate was fully restrained. The tensile axial load and bending moments were applied on the edges of splice members to simulate load transferred from the brace member. The analytical model is shown in Figure 7.

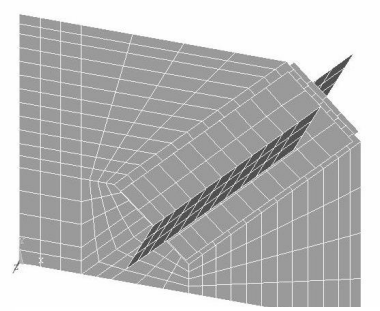

Figure 7 Analytical Model

To evaluate the influence of out-of-plane bending on the response, a small parametric study was conducted. Figure 8 shows selected results. Using a linear axial load-moment interaction diagram, the specimen was subjected to different combinations of axial load and bending moment demand. In the figure, the tensile axial load demand/capacity ratio is designated as P_u/P_n and the moment demand/capacity ratio is designated as M_u/M_n. Immediately, several trends are obvious. In the case of pure tension (Figure 8a), the stress is well distributed around the plate. However, as the moment demand increases, the local stress concentrations and the magnitudes of the principal stresses increase. At the extreme case of pure bending, the local stress demands are almost 10 times the stresses calculated in the pure tension case. These differences in the stress distribution and magnitude are expected to influence the failure mode of the connection and emphasize the need to consider realistic load and deformation demands.

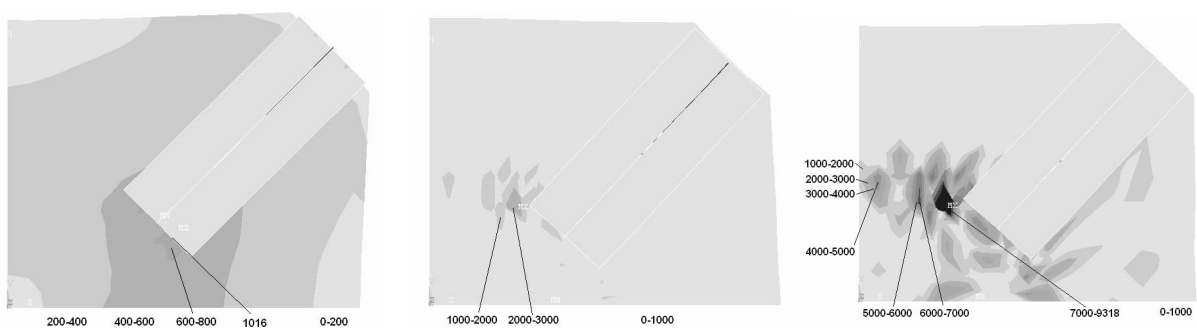

a) P_u/P_n=1, M_u/M_n=0 b) P_u/P_n=0.7, M_u/M_n=0.3 c) P_u/P_n=0, M_u/M_n=1

Figure 8 Influence of Rotational Restraint – Axial Load and in-plane Bending Moment

The previous results were used to evaluate the influence of the plate geometry on the response. Again, the plates were subjected to combined axial tension and moment. Figure 9 shows the influence of increasing the taper angle. Relative to the original plate (Figure 9a), the tapered plates show a more concentrated stress distribution and a more effective use of the plate material. However, a high degree of taper, as shown in Figure 9c, results in large stress concentrations which may result in premature failure.

The influence of the length of the splice plate on a plate subjected to combined axial load and out-of-plane bending was also investigated. Figure 10 shows the response of the original plate and a modified connection with a shorter splice plate. It should be noted that the original plate does not meet the geometric requirements in the AISC design provisions as there is not a clear distance of twice the plate thickness ($2t_p$) from the intersection line between the edge of the plate and the end of the splice plate

(AISC 2001). In Figure 10b, the splice plate length is modified to meet the design provisions. The results show that the original elliptical stress distribution (Figure 10a) widens as a result of the shorter length and the number of locations of large stresses increases. The large stresses in the middle of the plate in Figure 10b result from local buckling caused by the bending compressive stresses. The effectiveness of the shorter splice plate to ensure adequate plate yielding is questionable. The stress distribution in Figure 10a appears to provide an effective, elliptical yield line.

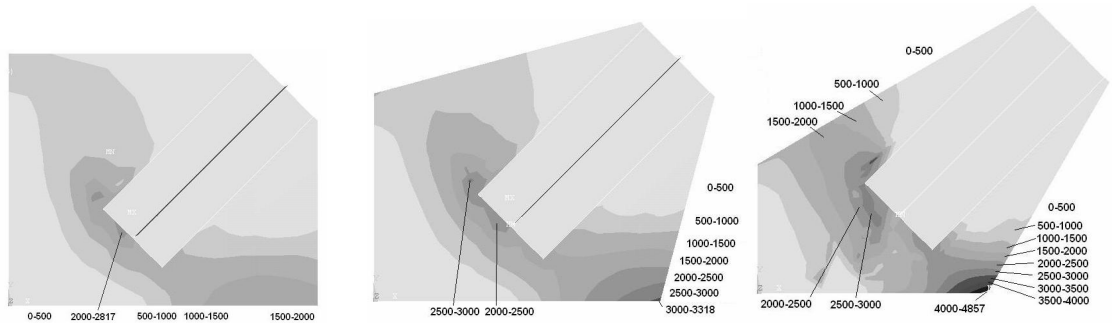

(a) Original Plate (b) 15° Taper (c) 30° Taper

Figure 9 Effect of Gusset Plate Shape

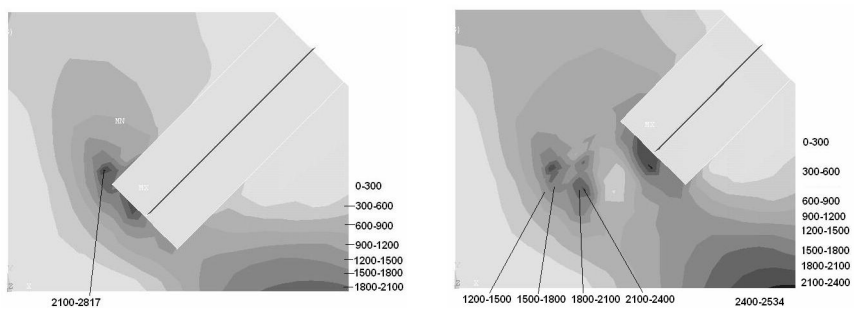

(a) Original Plate (b) Shorter Splice Plate

Figure 10 Effect of Splice Plate Length

These simulation results indicate the possibilities for improving the plate design by including more accurate estimation of the demands and alternative details and geometries. These results will be extended using nonlinear analysis results to further evaluate the response of the connection, and to evaluate and extend the proposed experimental research results.

PROPOSED EXPERIMENTAL STUDY

An experimental program is being conducted to develop and validate the proposed balance design methodology for SCBF and BRCBF systems. The primary study variables of the test program include the type of brace, the connection properties, and the balance conditions between the two. The test results will be used to validate the analytical simulation and proposed design equations to improve the seismic performance of gusset plate connections.

Experimental Program

The experimental research program consists of three test series and approximately 25 specimens. The first two series will evaluate the response of existing and modified gusset plate connections of SCBF and BFCBF systems, respectively. Series I and II will each consist of 9-10 specimens. The results of those tests will be used to evaluate and improve the proposed balance parameters. The third test series will evaluate the modified balance equations.

Figure 11 shows typical SCBF and BFCBF test specimens. All of the test specimens have identical frame geometries and are approximately 12-feet high and 12-feet wide. Each test specimen consists of a brace, connection, and framing elements. The test configuration and specimens have been designed to realistically and economically model the yield mechanisms and failure modes of all of the elements as well as to provide a realistic evaluation of the demands on the connections. The brace capacity has been designed to meet the capacity of the actuator (the braces capacity is approximately 350 kips) which models the lower stories in a low-rise structure and the middle to upper stories in a mid-rise structure.

Test Series 1 will evaluate current design requirements for SCBF connections (AISC 1997) (reference specimens) and investigate methods to improve their performance. Two reference specimens will be tested. One specimen will evaluate the response of a double-angle brace with bolted connections and the second will evaluate the response of a tubular brace with a welded connection. Figure 11a shows the proposed double-angle test specimen. The remaining specimens will evaluate the influence of modifying the connection properties or the balance conditions. For both brace cross sections, the gusset plate design will be modified. Likely modifications include variations in the plate geometry (e.g., tapered shape, plate thickness), lengthening of the brace relative to the connection, and explicit study of and design for balanced failure in the brace and yielding in the connection.

In a similar manner, Test Series II will evaluate current and improved design of gusset plate connection in BRCBF systems. Figure 11b shows the proposed reference specimen for this test series. It is expected that a single brace cruciform cross section will be used. The remaining specimens will evaluate the effects of tapering the plate, varying the plate thickness, and adding free-edge stiffeners. In addition, explicit evaluation of the balance conditions will be studied.

The final test series will consist of approximately six validation tests. The final specimens will not be designed until the test results have been used to evaluate the proposed design procedure. Modification or refinement of the design procedure will be evaluated using these latter tests

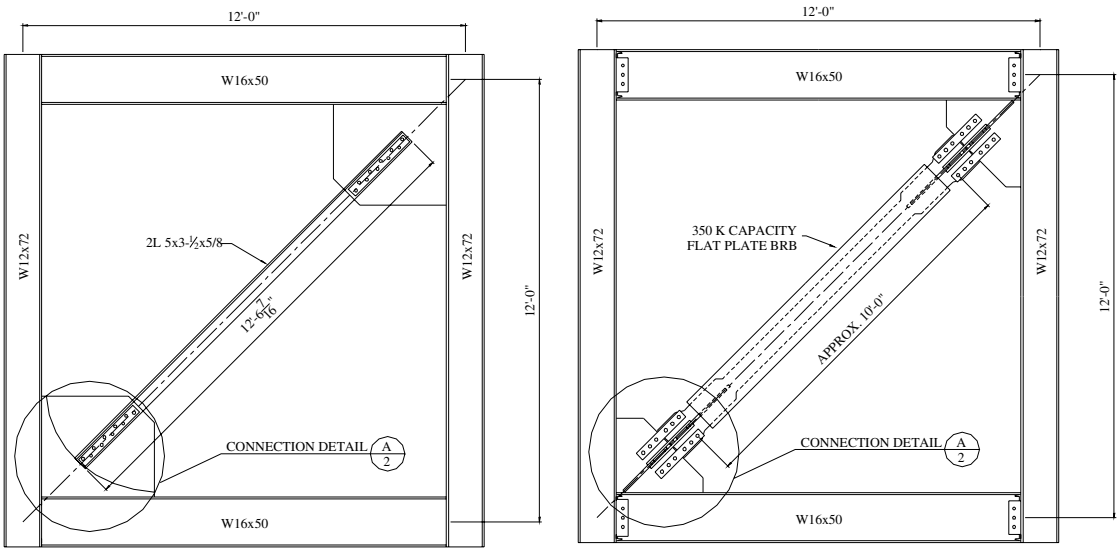

Figure 11 Proposed Reference Specimens for (a) Double-Angle and (b) Buckling Restrained Braces

Experimental Setup

A plan of the test configuration is depicted in Figure 12. The test configuration consists of the test frame and a test specimen. The test specimen will be place horizontally and loaded laterally using a horizontal actuator (shown at the bottom left of the figure). The frame reactions will be provided by the reaction beam/block/wall assembly (shown at the top of the figure), which will transfer the loads to the strong floor. Each test specimen will be subjected to the same cyclic drift history. The imposed drift history will consist of multiple cycles of increasing story drift. Initial drift cycles will be below the initial yield and buckling loads of the brace to examine lower demand levels and performance states. Subsequently, multiple cycles will be completed at and slightly above the buckling load and tensile yield load of the brace to examine the intermediate performance limit states. Finally, multiple cycles with increasing inelastic story drift will be imposed to evaluate the ultimate performance states and to achieve ultimate failure of the brace and/or the connection.

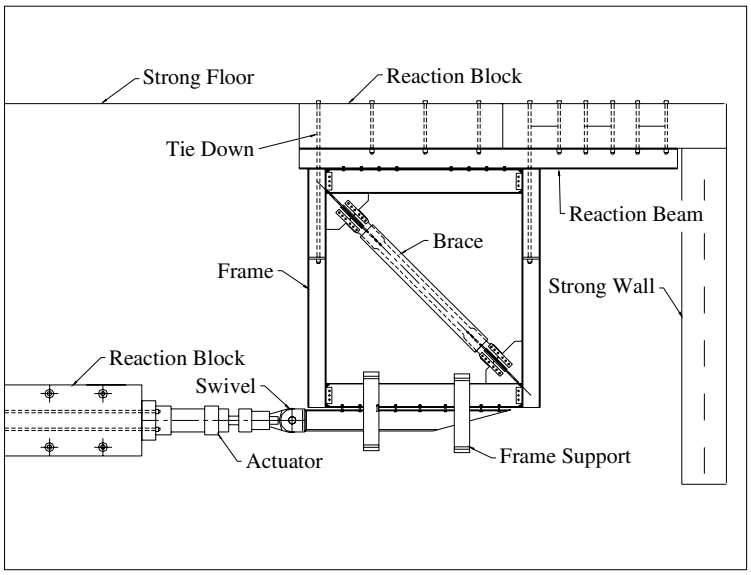

Figure 12 Test Configuration

CONCLUSIONS AND FUTURE WORK

To improve the seismic performance of gusset plate connections used in braced frame systems, an innovative design method based on balancing the controlling yield mechanism, secondary yield mechanisms and critical failure modes has been proposed. To date, past experimental results have been used to evaluate current design models and develop initial estimates of the balance equation and parameters. An experimental research program is being conducted to improve the proposed design models, further verify the balancing design concept, and validate the values of the balance parameters to achieve good seismic performance. The design procedures must be sufficiently robust to design a braced-frame system and all of the framing components.

The results of the experimental and analytical studies will provide designers with recommendations that will aid them in the design process. For example, these recommendations might include brace effective length coefficients (K factors) for both in-plane and out-of-plane buckling with full consideration of the gusset plate design. Additional recommendations for modeling the inelastic and post-buckling behavior of the brace for pushover and dynamic time history performance will also be examined. The goal of these final recommendations is to achieve the greatest economy from the SCBF system combined with optimal

seismic performance. Adjustments in β factors, revision or simplification of the way the balance conditions are applied or changes in the resistance models may be required to facilitate application of these research results into engineering practice.

ACNOWLEDGEMENTS

The research is funded by the National Science Foundation through Grant CMS-0301792, Performance-Based Seismic Design of Concentrically Braced Frames. Dr. Steven L. McCabe is the Program Manage for this research. This financial support is gratefully acknowledged.

REFERENCES

AISC (2001) "Manual of Steel Construction, Load and Resistance Factor Design," 3rd Edition, American Institute of Steel Construction, Chicago, IL.

AISC (2002) "Seismic Provisions for Structural Steel Buildings," American Institute of Steel Construction, Chicago, IL.

Ando, N. Takahasi, S. and Yoshida, K., (1993) "Behavior of Unbonded Braces Restrained by Reinforced Concrete and FRP," ASCE, Composite Construction II, New York, pgs 869-882.

Astaneh-Asl, A. (1989) "Simple Methods for Design of Steel Gusset Plates," Proceedings ASCE Structures Conference, San Francisco, CA.

Astaneh-Asl, A., Goel, S.C., and Hanson, R.D. (1982) "Cyclic Behavior of Double Angle Bracing Members with End Gusset Plates," Research Report UMEE 82R7, Department of Civil Engineering, University of Michigan, Ann Arbor, MI.

Brown, V.L.S., (1988) " Stability of Gusseted Connections in Steel Structures," A thesis submitted in partial fulfillment of Doctor of Philosophy in Civil Engineering, University of Delaware.

Cheng, J.J.R, Yam, M.C.H., and Hu, S.Z, (1994) "Elastic Buckling Strength of Gusset Plate Connections," *Journal of Structural Engineering*, Vol. 120, No. 2,

Clark, P.W., Kasai, K., Aiken, I.D., and Kimura, I., (2000) "Evaluation of Design Methodologies for Structures Incorporating Steel Unbonded Braces for Energy Dissipation," Proceedings 12th WCEE, Auckland, New Zealand.

Connor, J.J., Wada, A., Iwata, M., and Huang, Y.H., (1997) " Damage-Controlled Structuresl I: Preliminary Design Methodology for Seismically Active Regions," ASCE, Journal of Structural Engineering, Vol. 123, No. 4, pgs 423-31.

FEMA 350, (2000). "Recommended Seismic Design Criteria for New Steel Moment-Frame Buildings," **FEMA 350**, Federal Emergency Management Agency, Washington, D.C.

Grondin, G.Y, Nast, T.E., and Cheng, J.J.R., (2000) " Strength and Stability of Corner Gusset Plates Under Cyclic Loading, Proceedings of Annual Technical Session and Meeting, Structural Stability Research Council.

Hu, S.Z., and Cheng, J.J.R., (1987) "Compressive Behavior of Gusset Plate Connections," Structural Engineering Report No. 153, University of Alberta, Canada.

Inoue, K., Sawaizumi, S., and Higashibata, Y., "Stiffening Requirements for Unbonded Braces Encased in Concrete Panels, ASCE, Journal of Structural Engineering, Vol 127, No.6, pgs 712-19.

Rabinovitch, J.S., and Cheng, J.J.R. (1993) "Cyclic Behavior of Steel Gusset Plate Connections," Structural Engineering Report No. 191, University of Alberta, Canada.

Ricles, J.M., Mao. C., Lu, L.W., and J. Fisher, J.W., (2000) "Development and Evaluation of Improved Details for Ductile Welded Unreinforced Flange Connections," SAC BD 00-24, SAC, 555 University Ave, Suite 126, Sacramento, CA.

Roeder, C.W., (2001) "State of Art Report – Connection Performance", FEMA 355D, Federal Emergency Management Agency, Washington, D.C.

Roeder, C.W., (2002) "Connection Performance for Seismic Design of Steel Moment Frames," ASCE, *Journal of Structural Engineering*., Vol 128, No. 4, pgs 517-25.

Roeder, C.W., Lehman D.E., and Yoo J.H. (2004) "Performance-Based Seismic Design of Braced Frame Connections", *International Journal of Steel Structures*, submitted for publication

Thornton, W.A., (1991) "On the Analysis and Design of Bracing Connections," AISC, *Proceedings of National Steel Construction Conference*, Section 26, pgs 1-33.

Yam, M.C.H. (1994) " Compressive Behavior and Strength of Steel Gusset Plate Connections," a thesis submitted in partial fulfillment of Doctor of Philosophy degree, University of Alberta, Canada.

Yam, M.C.H., and Cheng, J.J.R. (2002) "Behavior and Design of Gusset Plate Connections in Compression," *Journal of Constructional Steel Research*, Vol 58, No. 5-8, Elsevier, pgs 1143-59.

Whitmore, R.E. (1952) "Experimental Investigation of Stresses in Gusset Plates," Engineering Experiment Station Research Bulletin No. 16, University of Tennessee, Knoxville, Tennessee.