13th World Conference on Earthquake Engineering
Vancouver, B.C., Canada
August 1-6, 2004
Paper No.1455

PERFORMANCE TEST OF WINDOW GLASS AND METAL DOOR UNDER HORIZONTALLY CYCLIC LOADING

Ja-shian(*) Chang[1], Chia-chi Chen[2], Tzung-hsien Woo[3]

SUMMARY

In this study the performance of nine aluminum windows with fixed glass and six metal doors are tested under horizontally cyclic loading. These window types and doors are commonly used in Taiwan for apartment building. During test, the performance of different deformation stage are recorded. From the window-glass test, followings are observed: 1.The height-to-width ratio and thickness of glass influence the window performance visibly. 2.The leeway space along the glass boundary provides better performance for the windows. 3.When the glass get crushed, the horizontal distance that broken glass fly away may reach two times of the window height. The corresponding relative displacement angle of window framework is about 2%. From the door test, it is observed that the doors operate smoothly, if the relative displacement angle is less then 0.5%. As the relative displacement angle reaches 0.7%, both door and lock may get clogged. When the angle is great than 1.1%, even the framework of door may be squeezed seriously. The performance test show the 0.5 % relative displacement angle is a critical deformation for the tested doors. At this deformation, not only the doors get clogged, several secondary damages will also be caused. However, the main structural members of the building may still in elastic stage. For performance-based design this deformation need to be well considered, especially for the door of main exit.

I. INTRODUCTION

During earthquake, besides the damage of main structure could happen, the building non-structure such as exit door or window glass could also get damaged. The damage of exit door will block people to leave the damage building rapidly. Under this situation, if an earthquake fire happened, awful tragedy may follow. The damage of window, due to the scattering of window glass, will have the danger of emergency path increased. Especially the damage of high area window, scattering broken glass just like flying sharp knife, extra casualty is easy to be caused during earthquake.

[1] Professor , Architecture Department , Cheng-Kung University , Taiwan , z6703001@email.ncku.edu.tw
[2] Graduate Student , Architecture Department , Cheng-Kung University , Taiwan
[3] Graduated Student , Architecture Department , Cheng-Kung University , Taiwan

Recently, in the world, performance based design has been the main stream of earthquake-resistant building design. The design includes the consideration of nonstructure performance during earthquake. However, each country, the actual performance of nonstructure may different, and the design requirement must also be different.

In this paper, the performance of a series of exit door as well as windows that commonly used in Taiwan's building are investigated by experimental test. For building design, these tests provide the bases for reviewing the existing performance based design criterias, if as the nonstructure element ----exit door and window glass are considered in the performance-based design.

II. EXPERIMENTAL SET-UP

Fig.1 is the fundamental design of test frame that used in this study. In general, the frame is constructed by 75mm×150mm channel and high strength bolt. The horizontal and vertical main member of the frame is pinned together. This arrangement gives the test specimen can be applied by horizontally reverse cyclic loading that tries to simulate the earthquake action. More details of the experimental arrangement are shown in Fig.2 and Fig.3. In Fig.2, the arrangement is used for door test, which consider the use of various specimen width. Thus the vertical member at mid-span is movable. During test, this vertical member also serves as one of the vertical constrains for the door specimen. In Fig.3, the arrangement is used for window glass test. The mid-span vertical member required in door test is moved away and replaced by a horizontal member. This member can be moved up and down for fitting the height of test window, and also act as the sill of window. In Fig.3, since the arrangement tries to simulate the actual boundary construction, at left side edge and right side edge of the window specimen, four small size channels are welded to the main upper and lower horizontal member.

As mentioned above, the frame arrangement tries to simulate the specimens under earthquake loading. During test, under the action of horizontal loading, the frame has a trend to be distorted to a parallelogram which will transfer the loading to the specimen. When the door specimen as well as window specimen is subjected to the action of horizontally loading, their deformation mechanism may be expressed as Fig. 4 and Fig.5 conceptually.

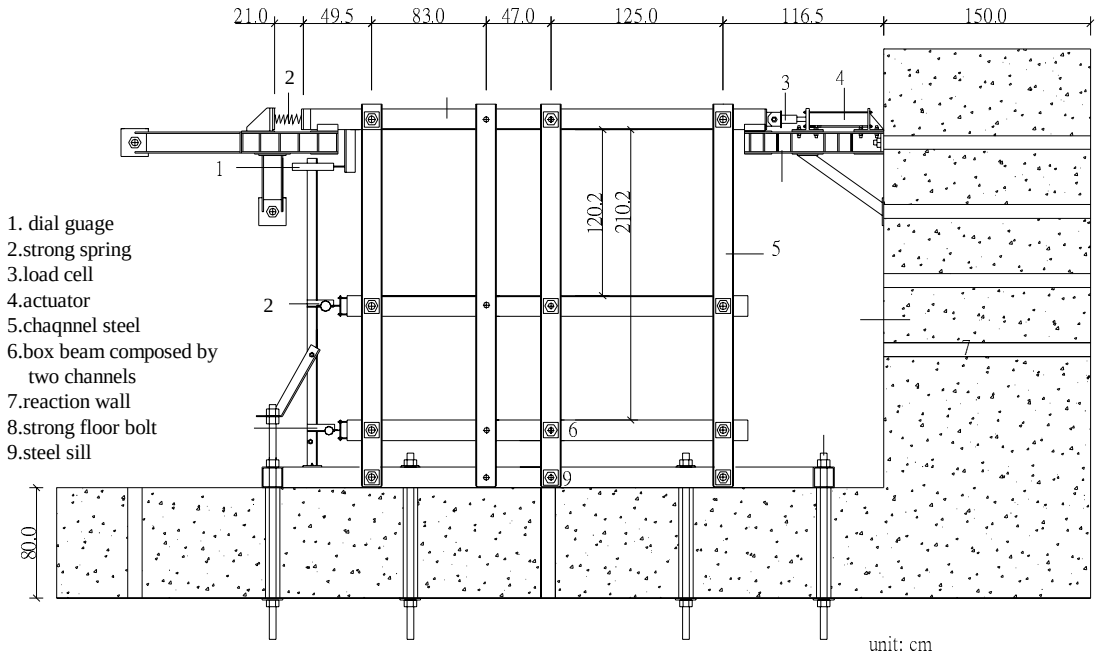

Fig1 Test Frame

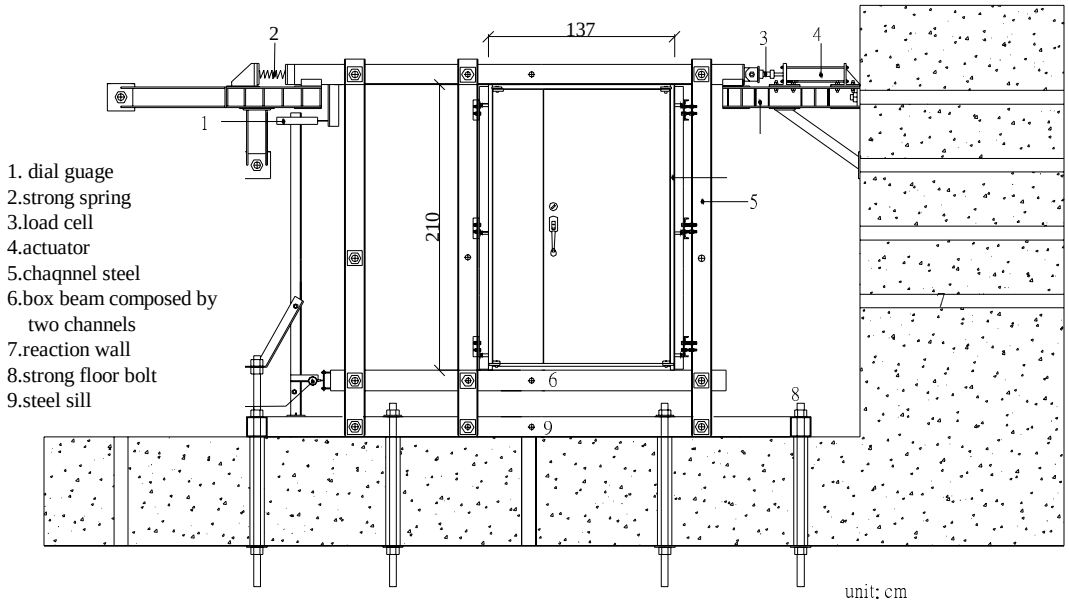

Fig2 Set-up for Door Test

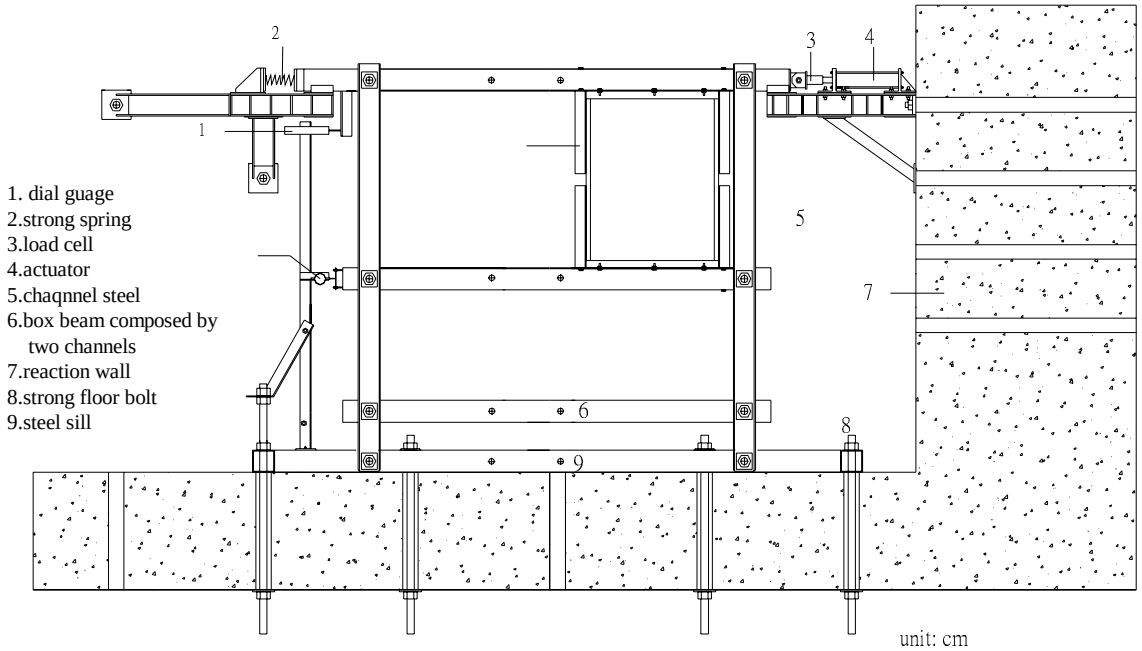

Fig3 Set-up for Window Test

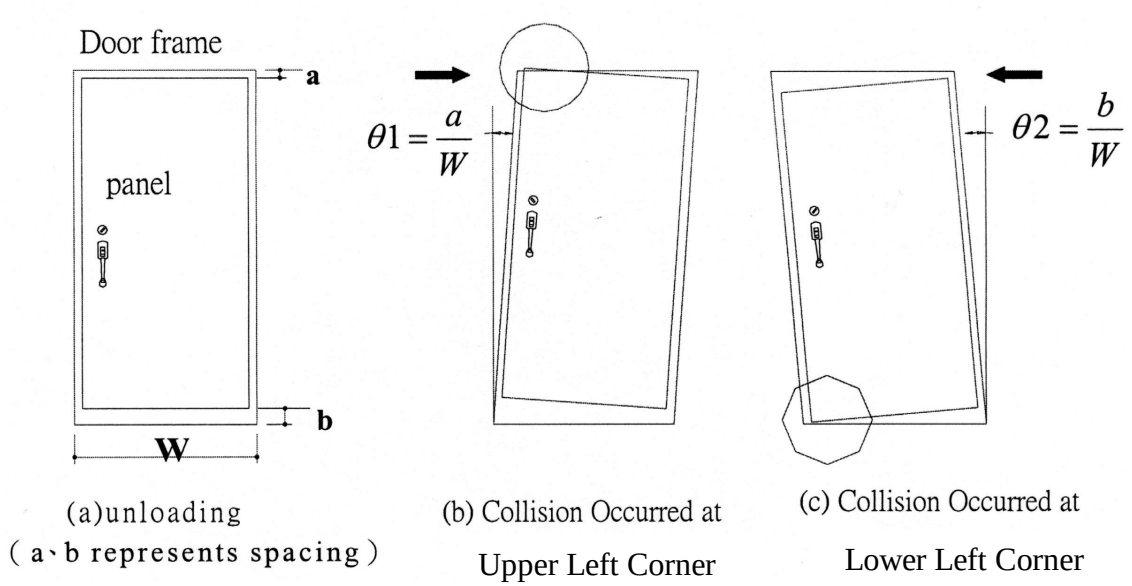

Fig.4 Deformation Concept for Door Specimen

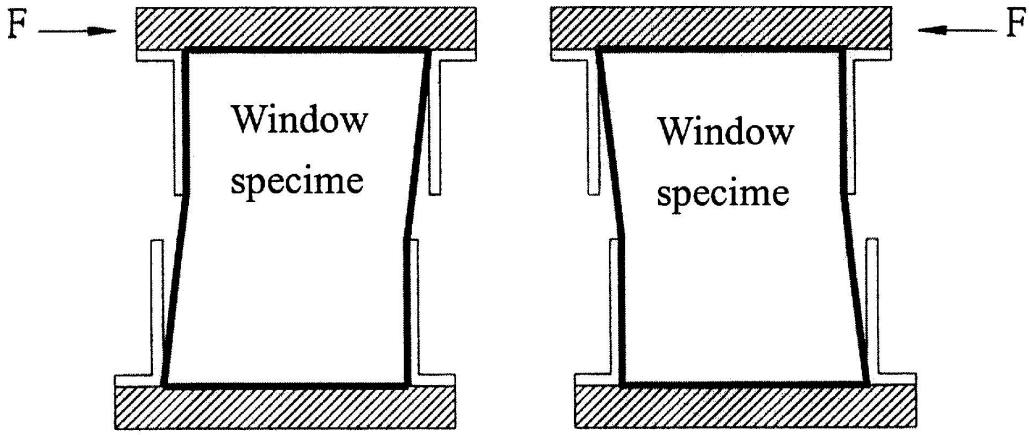

Fig5 Deformation Conception for Window Glass Specimen

III. EXIT DOORS TEST

Specimen and Test Procedure

In this study, the test doors try to simulate the emergency exit door of high-rise apartment building in Taiwan. According to the building code in Taiwan, for the floor upper than five, the exit door must satisfy CNS 7184-A2101 and usually the door is made of steel. The door specimens listed in Table 1 are the specimens tested in this study. In the size, these specimens can be divided in two categories. The 90cm-width category is a single-panel door, the 137cm-width category is a two-panel door which contains the larger panel with width 100cm and the smaller panel with width 37cm.

All the door specimens are equipped with door lock and door catch. The lock type selected for the specimens is the most common one that used in apartment building. In addition, during setting up for each specimen, a space about 2cm between the bottom edge of door specimen and the floor is considered in this test.

Table 1. Door Specimens

Specimen Number	Width × height (cm × cm)	Panel Type	Hinge Type
D1	90×210	Single-panel（push and pull）	Bolted at top and bottom point
D2	90×210	Single-panel（push and pull）	Bolted at top and bottom point
D3	90×210	Single-panel（push and pull）	Butterfly hinge
D4	90×210	Single-panel（push and pull）	Butterfly hinge
D5	137×210	Two-panel（push and pull）	Bolted at top and bottom point
D6	137×210	Two-panel（push and pull）	Butterfly hinge

After the test system has been set up, the horizontal load is applied and carefully controlled by displacement. For recording the complete damage of the specimen, and followings are checked for every 1/1000 relative displacement angle increment：

1）、Door lock related damage.

2）、Door catch related damage.
3）、Collision of door panel and door frame.
4）、Door hinge related damage.
5）、Other damage of the specimen.

Furthermore, besides the four items mentioned above, the distance between bottom edge of the door and floor will be carefully measured for checking the damage of door corner.

Since the damage modes are not occurred at one deformation situation but gradually, during test, if the door lock is seriously deformed and causes the door can not be open by hand, we will let the specimen back to the unlocking situation, then open the door and continue to proceed the test. If the deformation has caused collision of door panel and door frame, or the door deformation has the floor scratched, and the door can not be open by hand, a sand bag impact will be adopted. The sand bag impact tries to simulate, a man or woman use body or furniture to open the clogged door under emergency condition. The details of the sand bag impact test follows the requirement of CNS（Sand bag weight must be 30 kgf）. The impact area for the door specimen is controlled at the height of 100cm above the floor.

Test result

From the test of six door specimens, the damage modes observed have following：
1、Door lock seriously deformed or damaged, and door can not be opened.
2、Door catch seriously damaged, and door can not be opened.
3、Serious collision of door panel and door frame, door can not be opened.
4、Door lock slightly deformed or damaged, door can be opened but not smooth.
5、Door catch slightly damaged, door can be opened but not smooth.
6、Slight collision of door panel and door frame.

Table 2、 Damage Mode of Door Specimen and Its Corresponding Relative Displacement Angle

Specimen	Door Lock Damage		Door Catch Damage		Collision of Door Panel and Door Frame		Others	
	Slight (door can be open but not smooth)	Serious (door clogged and can not be open)	Slight	Serious	Slight	Serious	Door Bolt Deformed or Separated	Using Sand Bag Impact
D1	4	5	6	7	17	-	7	Yes
D2	4	5	9	15	9	16	16	Yes
D3	6	8	9	10	11	-	22	Yes
D4	5	6	-	8	6	11	17	Yes
D5	-	3	-	5	6	-	10	No
D6	-	1	3	4	4	-	9	No

Table 2 lists the six damage modes and their corresponding relative displacement angle for each specimen. For comparison and discussion, the test results are also expressed in Fig.6. From this figure, we may summarize the exit door test：

1、Under horizontal loading, the two-panel type exit doors suffered damage earlier than single panel exit door. For example, D5 and D6 suffered serious door lock damage at relative displacement angle

3/1000 and 1/1000 respectively. However, D1 and D2 got similar damage at relative displacement angle 5/1000, much later than that of D5 or D6.

2、In general, the door equipped with butterfly hinge performs better than the door equipped with bolt type hinge. For example, D3 specimen got door lock seriously damaged and door catch seriously damaged at relative displacement angle 8/1000 and 10/1000, respectively. While D1 specimen occurred similar damage mode at smaller relative displacement angle 5/1000 and 7/1000, respectively.

3、For each specimen, door lock seriously damaged is the first mode that make the door can not be opened after earthquake. This phenomenon also indicates that for emergency safety consideration, during earthquake the exit door should be kept unlocked.

4、According to the test result of four single-panel door specimens, in average, door lock slightly damaged happened at relative displacement angle of 5/1000, and if increasing 1/1000 more, i.e relative displacement angle 6/1000, the damage will be seriously. The door can not be opened. Furthermore, if the relative displacement angle reaches 10/1000, both of door lock and door catch will be damaged seriously. Under this damage situation, the people in the damaged room need rescue after earthquake.

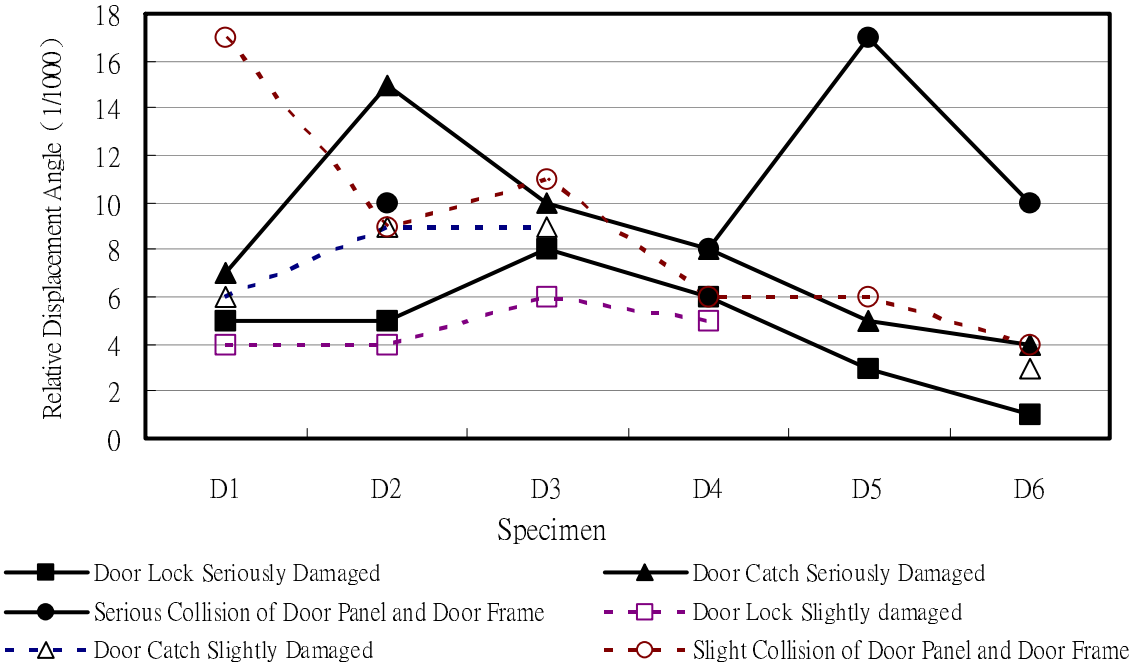

Fig.6 Damage Mode and Its corresponding Relative Displacement Angle for Each Door Specimen

IV、 WINDOW GLASS TEST

Specimen and Test Procedure

Totally 9 window specimens are arranged and tested in this study（Table.3）. All the specimens arranged try to simulate the fixed window that commonly used in the apartment building of Taiwan. The

window specimens are constructed by aluminum frame satisfy the requirement of CNS-2257-H48. Fig.7 shows the detail arrangement of the boundary of glass. From the 9 planned specimens, following parametes that related to the damage behavior of window glass will be investigated：

1、The influence of geometric shape, i.e. height / width ratio.
2、The influence of glass thickness.
3、The influence of boundary spacing around the glass.
4、The influence of fixing type of glass.

Table 3 Window Specimen

Number	Width×height（cm ×cm）	Glass thickness	Boundary Spacing	Remark
A1	54×120	5mm	None	-
A2	54×120	3mm	None	-
A3	90×120	5mm	None	-
A4	90×120	3mm	None	-
A5	90×120	3mm	None	Glass corner smoothy
A6	90×120	3mm	None	Fixed with aluminum layer
A7	90×120	3mm	5mm	Without gasket
A8	90×120	3mm	5mm	Gasket available
A9	90×120	3mm	5mm	Gasket available by PVC

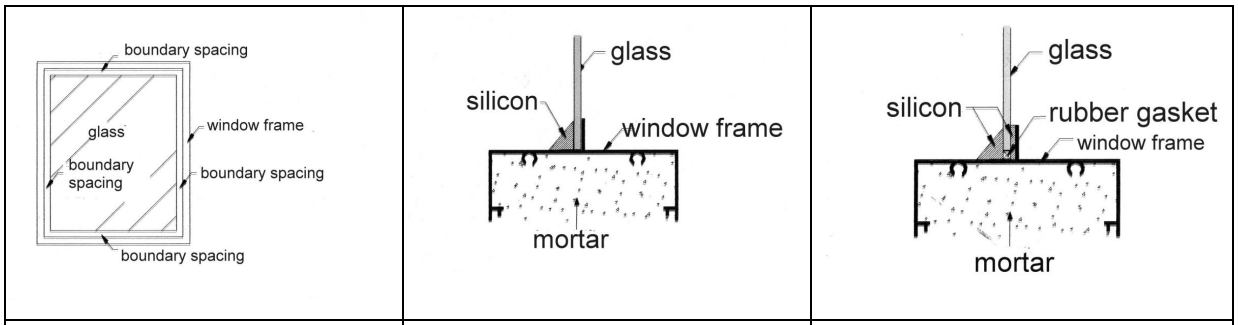

（a）、Boundary spacing | （b）、Window glass without boundary spacing | （c）、Window glass with boundary spacing

Fig.7 Construction Detail of Window Specimen

Test Result

During test, the window specimens is subjected to a reverely cyclic loading（Fig.8）. The loading is applied horizontally and keep increasing until the limit relative displacement angle 55/1000 has reached or the window glass was got serious damage.

The major test results of the 9 specimens are listed in Table 4. In addition to the relative displacement angle that glass got damaged, the scattering area and the farest distance that broken glass pieces scattered are also presented.

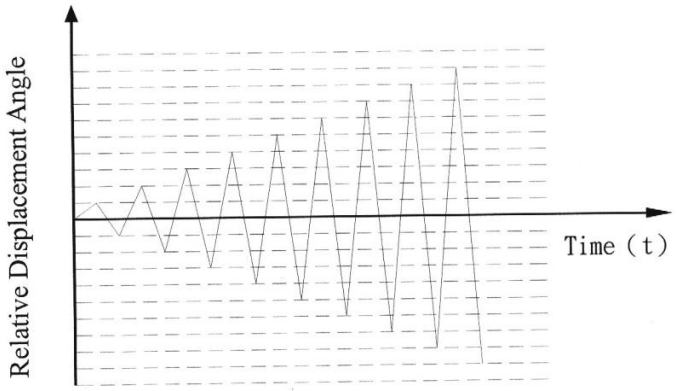

Fig.8 Loading Type of Window Specimen

Table 4 Test Result of Window Specimens

Specimen	Relative Displacement Angle at Glass Damage	Scattering area	Farest distance glass scattered
A1	55.0 / 1000	Crack only	Crack only
A2	32.4 / 1000	1.0m	2.7m
A3	33.0 / 1000	5.0m	8.0m
A4	16.0 / 1000	1.8m	5.6m
A5	21 / 1000	2.0m	4.9m
A6	14.8 / 1000	2.6m	3.6m
A7	26.7 / 1000	1.0m	1.8m
A8	22.7 / 1000	2.8m	5.6m
A9	22.6 / 1000	2.5m	4.0m

From the window glass test, following behavior or phenomena are observed：

1、Large window glass got damage earlier and easier than smaller one.
2、The geometric shape of window glass influences glass damage visibly. In other words, a window with larger height / width ratio, during earthquake, its performance will be better than that of short-squat window glass.
3、Thick window glass provides better resistance to the earthquake loading than that of thin window glass.
4、The window glass has boundary spacing can improve the performance damage during earthquake. If the boundary spacing is accompanied by soft gasket at the middle area, the performance will be more better.
5、Even the four glass corners are smooth, the performance is not improved visibly.
6、When glass damaged by earthquake loading, the scattering area is related to the area of window glass, and the scattering distance is related to the window height. In average, the scattering distance is about 2.5times of the height of broken window glass.

V. COMPARISON

Presently, VISION 2000 has been the principal guide of performance-based design in many area of the world. Taiwan is also a area of that. However, the criterion suggested in VISION 2000 is used to control the structure element. For non-structure element, the criterion need to be defined by local area, and should be different from that of the structure requirement. Followings are the two comparisons of VISION 2000 and the test of this study.

1） In VISION 2000 , for a building under the earthquake of 475-year-return period, the relative displacement angle is required to be less than 1.5% for the structure system. The structure system may suffer a mid-damage but still at life safe stage. Comparing this stage to the exit door test as well as window glass test proceeded in this study, it is found that part of window glass may have broken and all of the exit door not only door lock but also door catch will be seriously damaged, and people can not open the door. Under this stage, even the people did not get injured physically, but some degree of psychological hurt could be existed.

2） In VISION 2000 , for a building under the earthquake of 72-year-return period, the relative displacement angle need control to be less than 0.5%. At this stage, structure may suffer slight damage, but system is operational. Comparing this stage to the test study of this paper, even glass damage may not meet, but exit door damage will happen, especially the exit door of two-panel type may have suffered serious damage.

VI. CONCLUSION

The exit door and window glass are two important non-structure element of a building system. Their performance during earthquake must be well considered in design stage. However, since the characteristic of exit door and window is much different from that of structure member. Thus in performance-based design, its criterion for each design level should be different from that provided for the structure element. In this paper, the experimental results about the exit door and window glass could be one of the bases to discuss the design criterion that consider non-structure performance.

Besides, the performance related parameters, investigated in this paper, also can be the guide for improving the performance of exit door and glass window.For the exit door, test study show the 5/1000 is a critical relative displacement angle. If the deformation exceeds this critical angle, secondary damage could be happened. For improving the door performance, the construction of door lock and door catch and also the relationship between door panel and door frame should be carefully designed. For the window glass , although the test shows deformation angle corresponding to damage is greater than door , but as broken , the secondary damage may be more serious and directly than that of exit door. In order to reduce the damage during earthquake excitation , the geometric shape , glass thickness , boundary spacing should be well considered during design stage.

REFERENCES

1. Building Disaster Prevention , No.245 , 1998,6 The Japan Building Disaster Prevention Association.
2. Hisashi OHIRA and Makoto TSUJIMOTO , ase Study on Apartment Entrance Doors Damaged by the Hyogoken-Nanbu Earthquake” , Conference paper No.21049 , 1996,9 , JASA , Japan.

3. Ja-Shian Chang , Chia-Chi Chen , erformance-Base Design Criteria Based on the Earthquake Damage of Emergency Doors and Window Glass" 2000,10 , (NSC88-2625-Z-006-007), National Science Council , Taiwan .
4. Chia-Chi Chen , Ja-Shian Chang , he Earthquake Damage of Exit and Fixed Window Glass" , 2002,10 , (NSC-90-2625-Z-165-001) , National Science Council , Taiwan .
5. Tzung-Hsien Woo , erformance-Based Design Criteria Based on the Earthquake Damage of Emergency Doors and Window Glass" Master Thesis , 2001,01,National Cheng-Kung University , Tainan , Taiwan.