13th World Conference on Earthquake Engineering
Vancouver, B.C., Canada
August 1-6, 2004
Paper No. 1387

JSSI MANUAL FOR BUILDING PASSIVE CONTROL TECHNOLOGY PART-4 PERFORMANCE AND QUALITY CONTROL OF VISCOUS DAMPERS

Yoshiko TANAKA[1], Sumio KAWAGUCHI[2], Masaru SUKAGAWA[3], Nobuo MASAKI[4], Shinji SERA[5], Yuji WASHIYAMA[6] and Yuji MITSUSAKA[7]

SUMMARY

In this paper, viscous dampers are classified into shearing resistance type and fluid resistance type by the difference of principle of occurring damping force. And shearing resistance types are classified into wall type, multi-layer type and cylinder type by the difference of mechanism. The damping force of shearing resistance type comes from the shearing resistance force of viscous fluid filled in, and that of fluid resistance type comes from the fluid resistance force of special filling material. Each of shearing resistance type and fluid resistance type has velocity-dependency and the damping force of them tends to increase according as the increase of velocity. Shearing resistance type also has temperature-dependency and the damping force of it tends to decrease according as the increase of temperature. Therefore it is converted at the standard temperature for the accurate evaluation. The damping performance, dependencies and durability of viscous damper are confirmed and evaluated by the appropriate tests, and the quality of it is controlled in the manufacture process under the specific quality control system.

INTRODUCTION

The manual for building passive control technology was made by the Response Control Committee of the Japan Society of Seismic Isolation. This paper mainly presents a part about viscous damper of it, the basic principle, dynamic characteristic, dependencies, performance test and quality control.
Viscous dampers have two types, shearing resistance type and fluid resistance type, on the principle of occurring damping force. In the two types, shearing resistance type utilizes the shearing resistance force of viscous fluid with high viscosity. As for fluid resistance type, it utilizes the fluid resistance force of special filling material. Fig. 1 shows the classification map of viscous dampers in this paper.

[1] Oiles Corporation, Tokyo, JAPAN. Email : y.furukawa@oiles.co.jp
[2] Oiles Corporation, Tokyo, JAPAN. Email : s.kawaguchi@oiles.co.jp
[3] Menshin Engineering Co., Ltd., Tokyo, JAPAN. Email : sukagawa@oiles.co.jp
[4] Bridgestone Corporation, Kanagawa, JAPAN. Email : masaki-n@bridgestone.co.jp
[5] Aseismic Devices Co., Ltd., Tokyo, JAPAN. Email : sera@adc21.co.jp
[6] Meiyu Airmatic Co., Ltd., Kanagawa, JAPAN. Email : yuji-w@meiyu-co.jp
[7] Sumitomo & Mitsui Construction Co., Ltd., Tokyo, JAPAN. Email : ymitu@smcon.co.jp

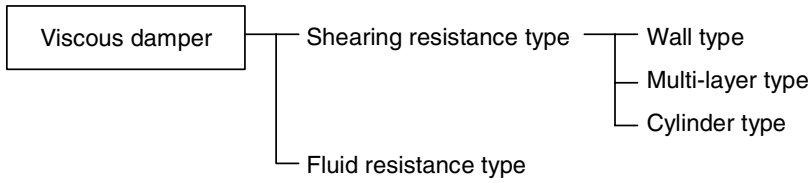

Fig.1 Classification of viscous dampers

SYMBOLS

The symbols in this paper are shown in Table1.

Table1 Symbols

F	: Damping force	v_n	: Axial velocity
μ	: Coefficient of viscosity	C_{eq}	: Coefficient of equivalent viscous damping
v	: Relative velocity	ΔW	: Dissipation energy
d	: Shearing clearance	a	: Amplitude
S	: Shearing area	ω	: Circular frequency ($\omega = 2 \cdot \pi \cdot f$)
t	: Temperature of viscous fluid	s	: Amplification ratio of velocity in inner-cylinder
f	: Frequency	A, C_e, α, β, γ, φ, λ	: Coefficient

FUNDAMENTALS OF VISCOUS DAMPER

Basic Principle and Mechanism

Shearing resistance type

The damping force of shearing resistance type is by the shearing resistance force of filled viscous fluid. The principle of occurring damping force of shearing resistance type is shown in Fig.2. And the equation (1) indicates the basic damping characteristic of it.

Shearing resistance type dissipates the vibration energy by the hysteresis loop in the time of earthquake, strong wind and so on. The loop is made by transposing the relative story displacement of installing building into the relative movement of its own plural plates.

Shearing resistance types are classified, wall type, multi-layer type and cylinder type, as shown in Fig.1. The each basic characteristic of them is as follows.

Wall type : The mechanism of wall type is shown in Fig.3. It is principally composed of the outer steel plate (container for viscous fluid) filled with viscous fluid and the internal steel plate (resistance plate) inserted in the outer. Wall types are classified into single type and double type by the difference of number of internal plates.

Multi-layer type : The mechanism of multi-layer type is shown in Fig.4. It is principally composed of the container filled with viscous fluid, movable resistance plates and fixed ones. It is capable of occurring high damping force by multi-layer shearing surfaces of resistance plates inserted in the container.

Cylinder type : The mechanism of cylinder type is shown in Fig.5. It is principally composed of the conversion, amplification and damping sections. The amplification section means ball screw nut, and the damping section is filled with viscous fluid. The inner pipe rotates in the outer one filled with viscous fluid at speed. The linear motion of its axis direction is converted into the rotary with amplification. The damping force occurs by such a shearing deformation of the inner pipe in the outer one. It is possible to be coordinated by changing the effective length and viscosity of filled viscous fluid.

$$F = \mu \cdot (v/d) \cdot S \qquad \textbf{(1)}$$

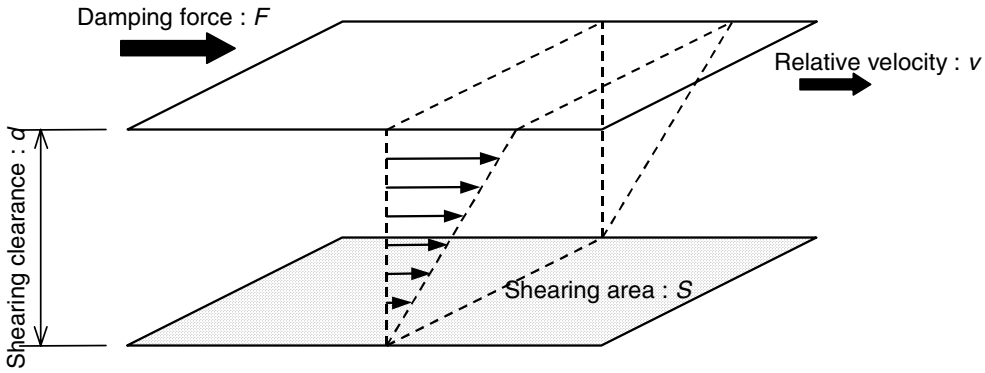

Fig.2 Principle of occurring damping force of shearing resistance type

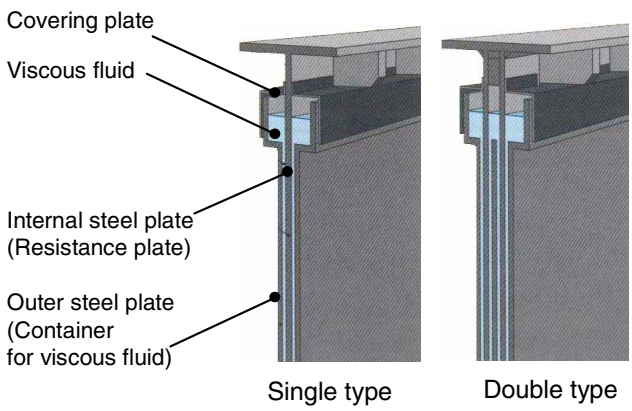

Fig.3 Mechanism of wall type (e.g.)

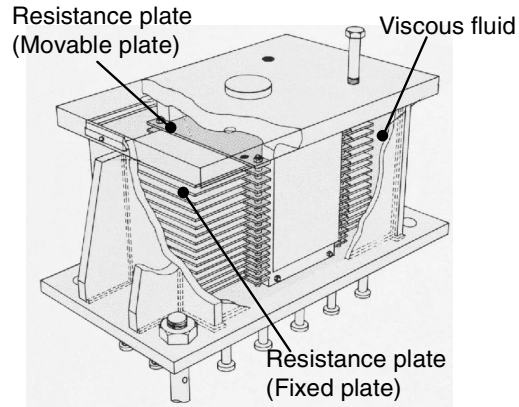

Fig.4 Mechanism of multi-layer type (e.g.)

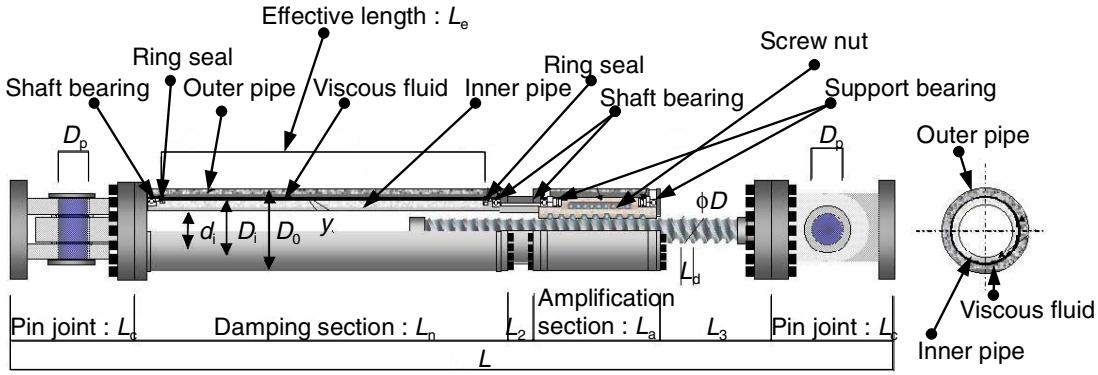

Fig.5 Mechanism of cylinder type

Fluid resistance type
Fluid resistance type utilizes the fluid resistance force of filling material. The mechanism of it is shown in Fig.6. It is principally composed of the special filling material, piston and rod in the cylinder. It has velocity-dependency, so the damping force is in proportion to velocity. The proportional degree of velocity to damping force depends on the characteristic of filling material.

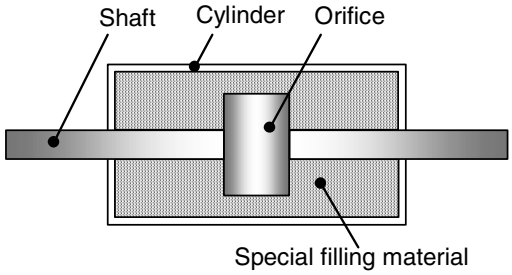

Fig.6 Mechanism of fluid resistance type

In the following sections, shearing resistance type is described about each classified type except multi-layer type. The reason is the characteristics of wall type and multi-layer type are almost same by the same viscous fluid.

Type of Installation
Shearing resistance type : In principle, wall type is installed vertically to the horizontal floor. The reason is the surface of viscous fluid of it need to keep level for sufficient damping performance. The type of installation of it is called as wall-type. Wall type is generally installed between girders or binders in the building. But in the case the designed damping force is not so high, it is possible for wall type to be installed between floors or fitting rigs.
Cylinder type is generally installed between girders with brace member. The types of installation of it are called as brace-type and shear-link-type. In the case the type of installation is brace-type, the side of screw nut need to be jointed to the end of brace member. As for the case it is shear-link-type, the side of screw nut need to face brace member or column.
Fluid resistance type : Fluid resistance type is generally installed between girders with brace member like cylinder type. The types of installation of it are called as brace-type, shear-link-type and toggle-type.
The examples of installation's state of viscous damper are shown in Fig.7.

DYNAMIC CHARACTERISTIC AND APPLICABLE RANGE OF VISCOUS DAMPER

Fundamental Dynamic Characteristic
Shearing resistance type : The equation (2) indicates the fundamental characteristic of wall type, and the example of the hysteresis loop is shown in Fig.8. The equation (3) indicates the coefficient of equivalent viscous damping.
The equation (4) indicates the fundamental characteristic of cylinder type, and the example of the hysteresis loop is shown in Fig.9. The coefficient of equivalent viscous damping is similar to equation (3).
Fluid resistance type : The equation (5) indicates the fundamental characteristic of fluid resistance type, and the example of the hysteresis loop is shown in Fig.10. The equation (6) indicates the coefficient of equivalent viscous damping.

Shearing resistance type -wall type-			
Wall-type			
Shearing resistance type –cylinder type-			
Brace-type			
Shear-link-type			
Fluid resistance type			
Brace-type			
Shear-link-type			
Toggle-type			

Fig.7 State of installation (e.g.)

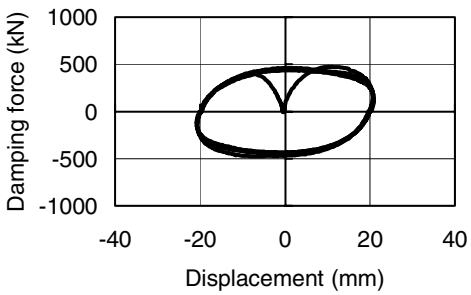

Fig.8 Hysteresis loop of wall type (e.g.)

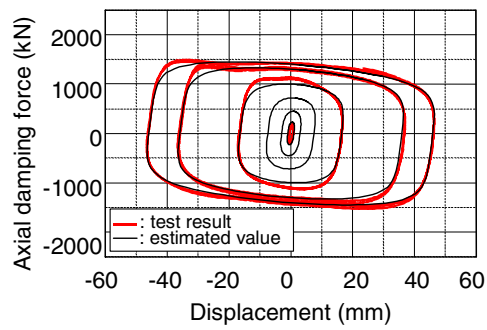

Fig.9 Hysteresis loop of cylinder type (e.g.)

$$F = A \cdot e^{\alpha \cdot t} \cdot S \cdot v^{\beta} \cdot d^{\gamma} \cdot f^{\varphi} \quad \textbf{(2)}$$

$$C_{eq} = \frac{\Delta W}{\pi \cdot \omega \cdot a^2} \quad \textbf{(3)}$$

$$F = \lambda \cdot s^{\alpha} \cdot \mu \cdot v_n{}^{\beta} \cdot d^{\gamma} \cdot S^{\varphi} \quad \textbf{(4)}$$

$$F = C_e \cdot v^{\beta} \quad \textbf{(5)}$$

$$C_{eq} = \frac{\Delta W}{A \cdot \omega \cdot a^2} \quad \textbf{(6)}$$

A : $\pi \leq A \leq 4$

(decided by the value of β in equation (5))

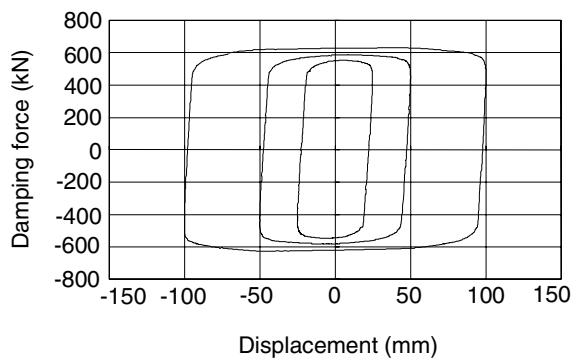

Fig.10 Hysteresis loop of fluid resistance type (e.g.)

Dependencies

Frequency-dependency

Shearing resistance type : The examples of frequency-dependency of wall type are shown in Fig.11. They are the test results of damping force on the each condition amplitude or velocity is invariable. As shown in them, wall type has little frequency-dependency in the case velocity is invariable.

The examples of frequency-dependency of cylinder type are shown in Fig.12. As shown in them, cylinder type has little frequency-dependency, for there is no specific relation between the dispersion of damping force and frequency.

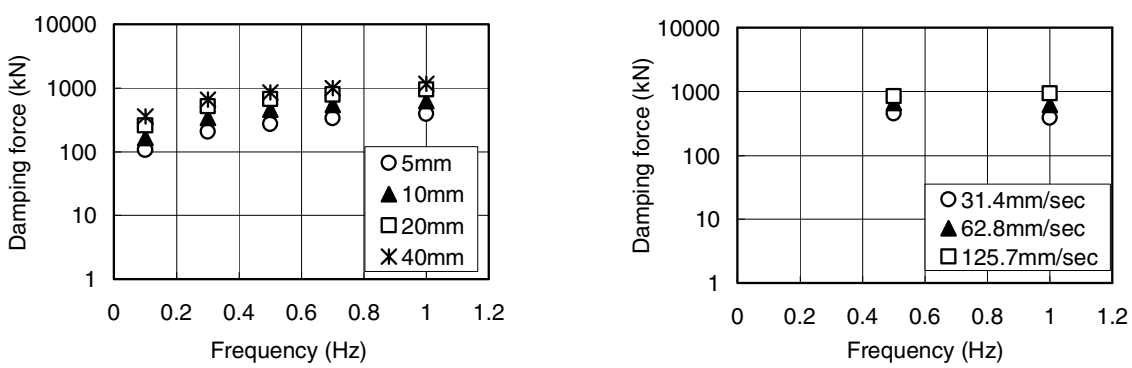

(a) Amplitude : invariable

(b) Velocity : invariable

Fig.11 Frequency-dependency of wall type (e.g.)

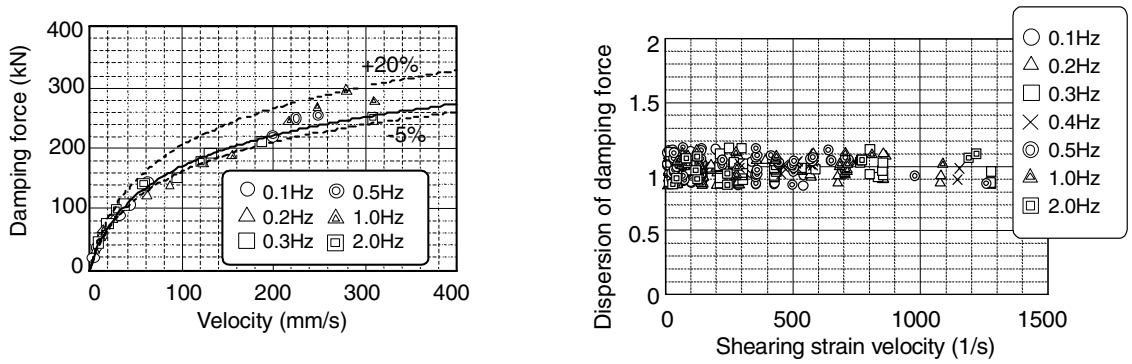

(a) Frequency : invariable (b) Ratio of test result to estimated value

Fig.12 Frequency-dependency of cylinder type (e.g.)

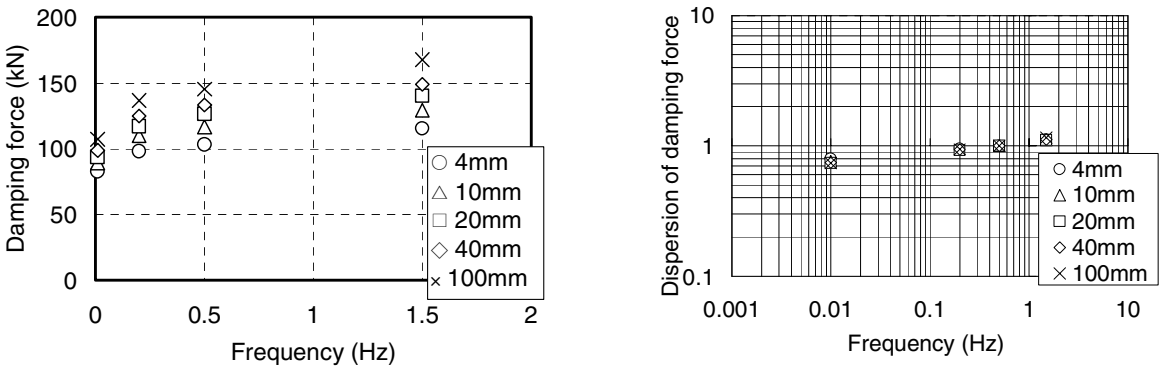

(a) Amplitude : invariable (b) Ratio of test result to standard value (0.5 Hz)

Fig.13 Frequency-dependency of fluid resistance type (e.g.)

Fluid resistance type : The examples of frequency-dependency of fluid resistance type are shown in Fig.13. Fig.13 (a) shows the test result of damping force on the condition amplitude is invariable. Fig.13 (b) shows the relation between the dispersion of damping force and frequency in the case the standard frequency is 0.5 Hz. As shown in it, fluid resistance type has little frequency-dependency, for the values of dispersion are almost equal to 1.

Velocity-dependency

Shearing resistance type : The example of velocity-dependency of wall type is shown in Fig.14. As shown in it, wall type has velocity-dependency, for the damping force tends to increase according as the increase of velocity.

The example of velocity-dependency of cylinder type is shown in Fig.15. As shown in it, cylinder type also has velocity-dependency like wall type.

Fluid resistance type : The examples of velocity-dependency of fluid resistance type are shown in Fig.16. They are the test results of damping force of two cases. As shown in them, fluid resistance type also has velocity-dependency like shearing resistance type. The damping force is in proportion to the multiplier of velocity in the range of 0.1 to 1. The value of multiplier depends on the characteristic of filling material and changes a little by the value of velocity.

Temperature-dependency

Shearing resistance type : The example of temperature-dependency of wall type is shown in Fig.17. As shown in it, wall type has temperature-dependency, for the damping force tends to decrease according as

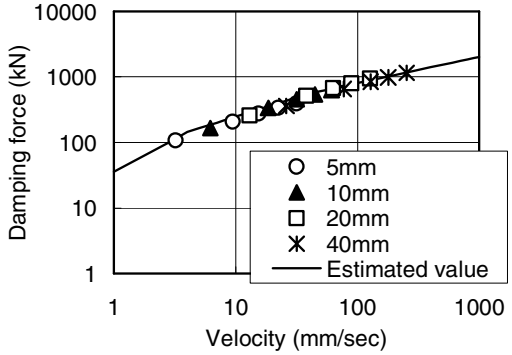

Fig.14 Velocity-dependency of wall type (e.g.)

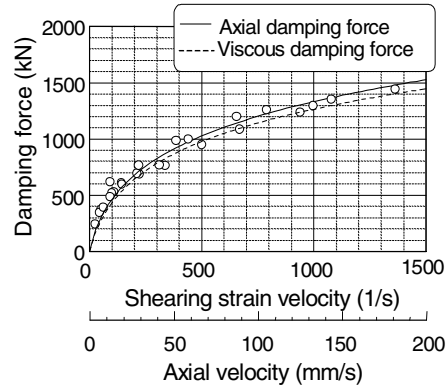

Fig.15 Velocity-dependency of cylinder type (e.g.)

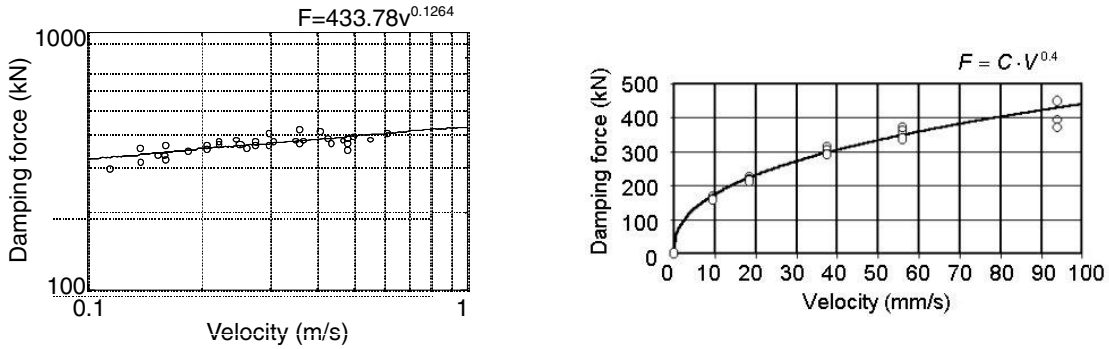

(a) $F = C_e \cdot v^{0.1264}$ (b) $F = C_e \cdot v^{0.4}$

Fig.16 Velocity-dependency of fluid resistance type (e.g.)

the increase of temperature. In consideration of it, the test result of damping force of wall type is generally compared with the designed value and evaluated by the converted value at the standard temperature.

The examples of temperature-dependency of cylinder type are shown in Fig.18. As shown in them, cylinder type also has temperature-dependency like wall type.

Fluid resistance type : The example of temperature-dependency of fluid resistance type is shown in Fig.19. It is the test result of damping force at the temperature in the range of 0 to 40 degrees. Fluid resistance type generally has little temperature-dependency differently from shearing resistance type. But in this example, the damping force increased at 0 degrees.

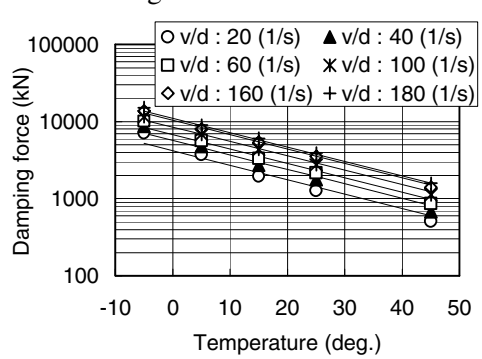

Fig.17 Temperature-dependency of wall type (e.g.)

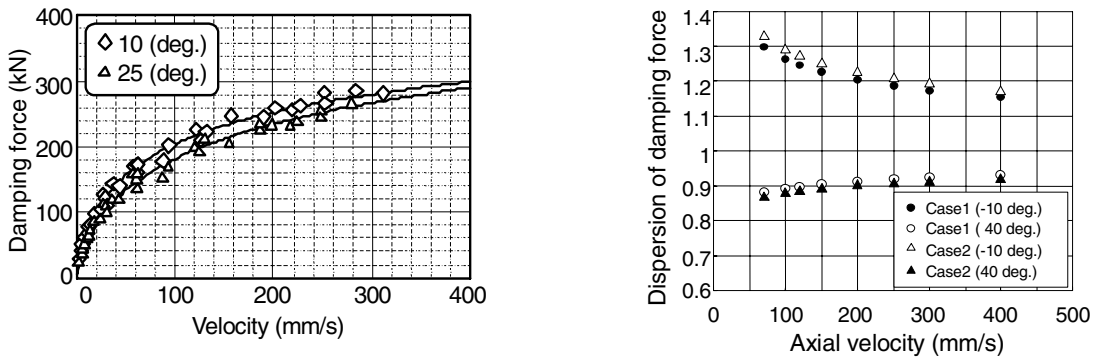

(a) Temperature : invariable (b) Ratio of test result to standard value (25 deg.)

Fig.18 Temperature-dependency of cylinder type (e.g.)

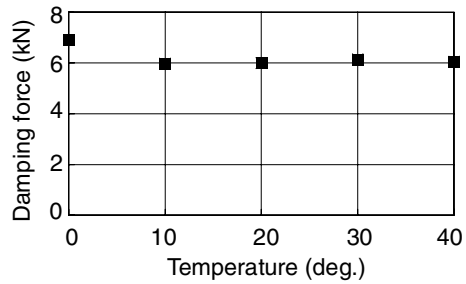

Fig.19 Temperature-dependency of fluid resistance type (e.g.)

Time-dependency
All type of viscous damper has little time-dependency.

Direction-dependency
Shearing resistance type : The damping force of wall type occurs in all the in-of-plane direction of internal steel plate, and the main direction is the in-of-plane lateral.
The damping force of cylinder type occurs only in the axis direction of rod.
Fluid resistance type : The damping force of fluid resistance type also occurs only in the axis direction of rod like cylinder type.

Durability
The weathered steel part of viscous damper is coated with the rustproof material. The durability of viscous fluid of shearing resistance type and that of special filling material of fluid resistance type are as follows.

Aging alteration
The viscous fluid and special filling material of viscous dampers have been confirmed as stable by the test results of heat aging-simulation.

Fatigue
The fatigue of viscous fluid and that of special filling material used in viscous dampers have no necessity to be considered. The reason is the characteristics of them hardly change even though they are stressed constantly. But the seals of cylinder type and fluid resistance type have necessity to be considered in the case of exciting a long time by wind load and so on.

Weathering resistance
Both of viscous fluid and special filling material used in viscous dampers have weathering resistance sufficiently on the condition of normal usage, and they are very stable to ozone, ultraviolet rays and so on.

Water resistance
The characteristics of viscous fluid and special filling material used in viscous dampers hardly change even though they are flooded.

Fire resistance
Shearing resistance type : The viscous fluid of wall type changes to gas at about 200 degrees, but it does not catch fire. It is possible for it to be designed not to change to gas by the fireproofing spray same as used to the steel members at the installed floor, fireproofing boards and so on. And there is the viscous fluid with extinction function by flame-retardant, too.
The flash point of viscous fluid used in cylinder type is approximately 300 degrees or over except that with low viscosity. And the combustion of viscous fluid is not possible to continue without the sufficient heat to resolve it. The spontaneous combustion point is approximately 450 degrees. The viscous fluid in cylinder type has no possibility of flash and spontaneous combustion, for oxygen is not supplied in it.
Fluid resistance type : The special filling material used in fluid resistance type has been confirmed having the high fire resistance by the test result at 900 degrees or over.

Stability to temperature
Shearing resistance type : The viscosity of viscous fluid used in wall type hardly changes in the temperature range of normal usage (from -5 to +45 degrees).
And the viscous fluid of cylinder type has stability to temperature like wall type.
Fluid resistance type : The special filling material of fluid resistance type has been confirmed having the stability to temperature by the heat aging test result (0.2Hz, 30mm).

PERFORMANCE TEST AND EVALUATION METHOD OF VISCOUS DAMPER

Material Test
The materials of viscous damper are roughly classified into steel, viscous fluid and filling material. The used steel of it is the standardized product. The example of material test of viscous fluid and filling material is shown in Table2.

Table2 Material test (e.g.)

Test item	Test content	Test method	Notes
Physical property	Dynamic viscosity	Confirmation by rotary viscosimeter at the standard temperature	The lot of test depends on the regulation of each manufacturer.
	Appearance	Confirmation of color and foreign object by visual check	
	Other	Based on the regulation of each manufacturer	
Chemical property	Flash point	Confirmation to the standard value by JIS K 2265	
	Other	Based on the regulation of each manufacturer	

Damping Performance Test
The test result of damping performance of viscous damper is defined by the damping force at the maximum velocity read from the third hysteresis loop. It is compared with the estimated value and confirmed whether it satisfies with the tolerance. That of shearing resistance type needs to be evaluated by the converted value at the standard temperature (20 or 25 degrees) in consideration of the temperature-dependency. Therefore, in the test of shearing resistance type, the temperatures of atmosphere and viscous fluid need to be measured. The example of damping performance test is shown in Table3. The examples

of testing machine are shown in Fig.20 to 23. And the analysis model of hysteresis loop and evaluation item are shown in Fig.24.

Table3 Damping performance test (e.g.)

Classification	Evaluation item	Test method	Test content & evaluation method
1. Basic characteristic	(1) Damping force	Measurement of the damping force and horizontal displacement of exciting test by 3 or more cycles of sine wave at the decided condition	1) Unconfined compression testing machine 2) Size : real 3) Assumption or standard condition 4) Comparison of the damping force at the maximum velocity read from the third hysteresis loop and the estimated value (The temperature-dependency of shearing resistance type needs to be considered.)
2. Dependencies	(1) Frequency-dependency	Either of velocity or amplitude : invariable The other : variable (in the test method of basic characteristic)	1) Unconfined compression testing machine or small testing machine of viscous shearing 2) Size : real or reduction 3) Parameter : frequency 4) Confirmation of the relation between damping force and frequency
	(2) Velocity-dependency	Either of frequency or amplitude : invariable The other : variable (in the test method of basic characteristic)	1) Unconfined compression testing machine or small testing machine of viscous shearing 2) Size : real or reduction 3) Parameter : maximum velocity 4) Confirmation of the relation between damping force and velocity
	(3) Amplitude-dependency	Either of frequency or velocity : invariable The other : variable (in the test method of basic characteristic)	1) Unconfined compression testing machine 2) Size : real 3) Parameter : maximum amplitude 4) Confirmation of the relation between damping force and amplitude
	(4) Temperature-dependency	Either of frequency or amplitude : invariable The other : variable (in the test method of basic characteristic)	1) Unconfined compression testing machine or small testing machine of viscous shearing 2) Size : real or reduction 3) Parameter : temperature 4) Confirmation of the relation between damping force and temperature
3. Others (special test)	(1) Recurrence	The test method of basic characteristic	1) Unconfined compression testing machine 2) Size : real 3) Assumed amplitude and number of cycles 4) Comparison of the damping force at the maximum velocity read from the third hysteresis loop and that at the assumed number of cycles (The temperature-dependency of shearing resistance type needs to be considered.)
	(2) Aging alteration	Heat aging acceleration test	1) Rotary viscosimeter 2) Viscous fluid 3) Temperature : 100, 150 (deg.) 4) By the arrhenius formula
	(3) Fire resistance	Fire resistant test	1) Fire resistant reactor 2) Viscous fluid 3) Application of heat at 350 degrees based on JIS K 2265 4) Confirmation of the flash point
	(4) Heat resistance	Thermal decomposition test	1) Differential thermal balance 2) Viscous fluid 3) Application of heat at 350 degrees 4) Confirmation of the weight change

3. Others (special test)	(5) Stability to temperature (except temperature-dependency)	Heat resistant test of viscosity	1) Rotary viscosimeter 2) Viscous fluid 3) Heating and cooling between 30 and 200 degrees 4) Confirmation of the viscosity before heating and that after cooling
	(6) Weathering resistance	Ozone resistant test or weathering resistant test	1) Ozone-tub 2) Viscous fluid 3) Density of ozone, temperature and test time based on JIS K 6259 4) Confirmation of the viscosity change
	(7) Water resistance	Immersion test	1) Water tank 2) Viscous fluid 3) Temperature and test time based on JIS K 6258 4) Confirmation of the weight change

1) : Testing machine, 2) : Specimen, 3) : Test condition, 4) : Evaluation method

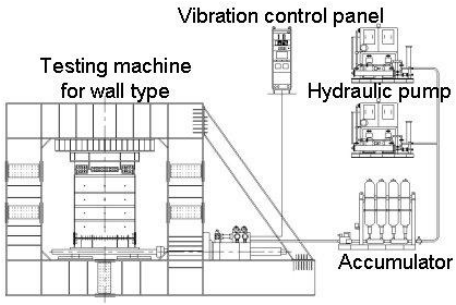

Fig.20 Testing machine for wall type (e.g.)

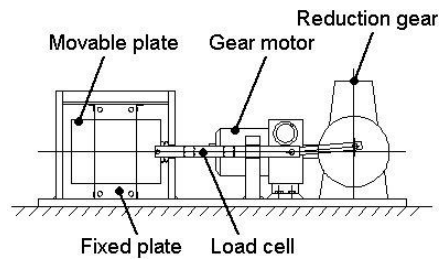

Fig.21 Small testing machine for viscous shearing of wall type (e.g.)

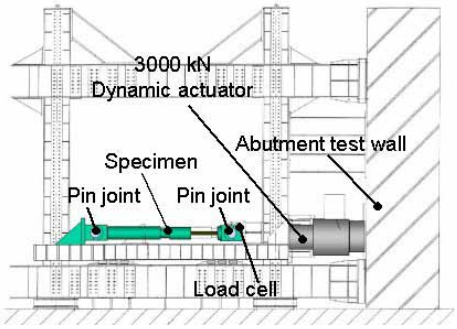

Fig.22 Testing machine for cylinder type (e.g.)

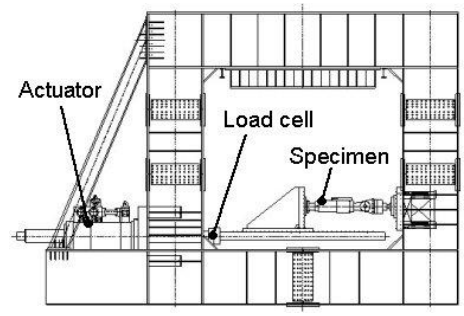

Fig.23 Testing machine for fluid resistance type (e.g.)

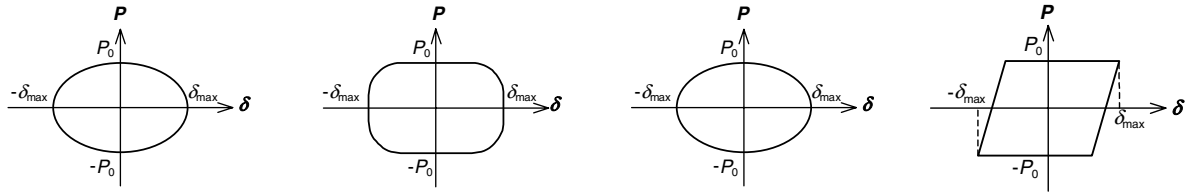

Shearing resistance type

Fluid resistance type

Damping force : $F = \left(P_0 + \left|-P_0\right|\right)/2$, Amplitude : $a = \left(\delta_{max} + \left|-\delta_{max}\right|\right)/2$

(P_0, $-P_0$: the test result of damping force)

Fig.24 Analysis model of hysteresis loop and evaluation item

QUALITY CONTROL OF VISCOUS DAMPER

Quality Control System

The quality control in the manufacture and construction of viscous damper is fundamentally based on the quality control system with the specific management classification. The quality control classification is shown in Table4.

Manufacture Process and Quality Control

The manufacturer of viscous damper needs to consult with the designer and constructor sufficiently and submit the work planning & specification and plan to them. The manufacture shall start after obtaining the permission from them. The example of the work planning & specification description is shown in Table5. And the quality of viscous damper is controlled by the various inspections in the manufacture process. The example of the quality control item in the manufacture process is shown in Fig.25.

Performance Test Item

The number of specimens and condition of the performance test need to be decided by the conference with the designer and manufacturer. In the case of sampling test, the ratio needs to obtain the approval of designer. The test result of damping force at the maximum velocity read from the third hysteresis loop is compared with the allowance value. That of shearing resistance type needs to be evaluated by the converted value at the standard temperature (20 or 25 degrees) in consideration of the temperature-dependency. And the form of hysteresis loop is confirmed whether it is clear. The example of test item for damping performance of viscous damper is shown in Table6.

Acceptance Inspection, Inspection under Construction and Completion Inspection

Each example of acceptance inspection, inspection under construction and completion inspection of viscous damper is shown in Table7 to 9. The completion inspection is hardly possible because viscous damper often has been covered with the finishing material at the time. Therefore, it is possible to be substituted the inspection under construction for it.

Table4 Quality control classification

Classification	Responsibility	Contents
Setting of the target performance	Designer	1) Setting and designing of the target performance
Total control	Designer or design supervisor	1) Quality control based on the standards 2) Check on the work planning & specification and plan
Construction control	Constructor or construction supervisor	1) Selection of the manufacturer 2) Check on the work planning & specification and plan
Manufacture control	Constructor & manufacturer	1) Manufacture based on the standards 2) Preparation of the work planning & specification and plan

Table5 Work planning & specification description (e.g.)

(1) Quality control system of manufacturer
(2) Process of manufacture
(3) Design specifics (demanded specifics)
(4) Specifics of viscous damper (material, form, dimension and so on)
(5) Contents of inspection and test (item, method, standard value and so on)
(6) Packing and transportation
(7) Submitted document

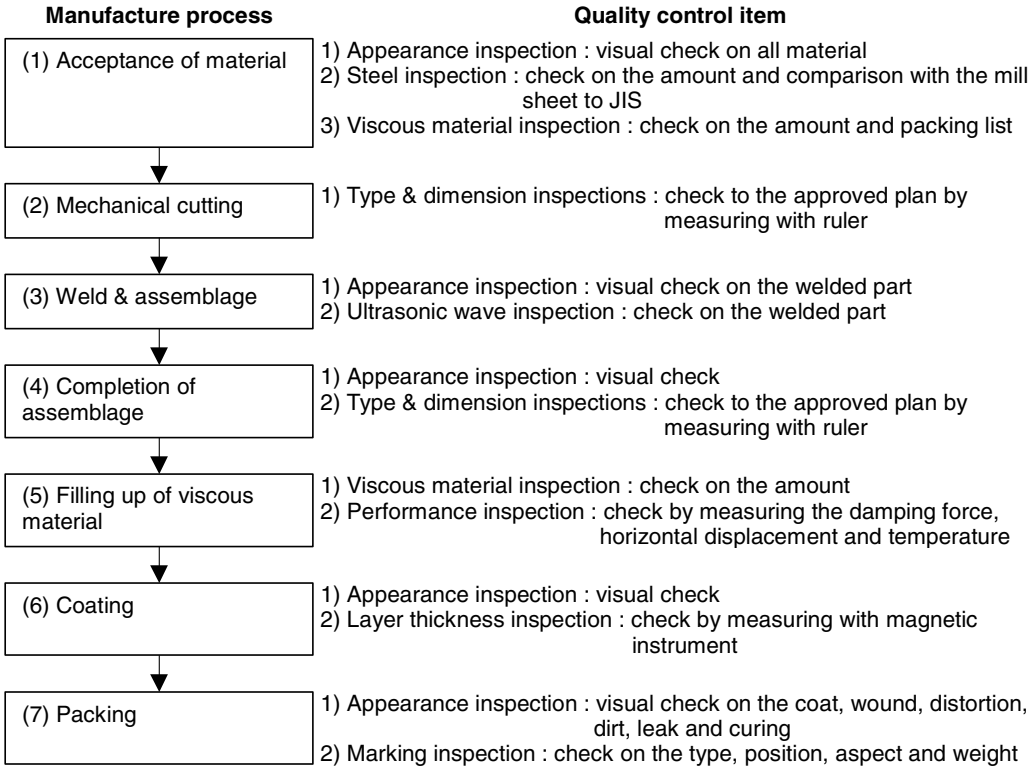

Fig.25 Quality control item in manufacture process (e.g.)

Table6 Test item for damping performance of viscous damper

Classification	Basic performance item	Object	Method & condition	Confirmation item
Basic characteristic	(1) Damping performance (2) Relation of damping force and velocity	All or sampling	Method : exciting test by sine wave Condition : decided frequency, amplitude, velocity and temperature of atmosphere	(1) Hysteresis loop (2) Damping force
Dependencies	Same as the Table3 if necessary			
Recurrence				

Table7 Acceptance inspection (e.g.)

Time	Item	Object	Method	Estimation standard	Step
In the manufacture process	Document	All	Confirmation of the own inspection result and the inspection certificate	(1) The standard value decided in the work planning & specification	Alteration
	Appearance	Sampling	Visual check		
	Performance	Sampling	Damping performance test	(1) The designed performance	Alteration
	Dimension	Sampling	Measurement	(1) Error (needs to be the standard value or less)	Alteration
After carrying to the site	Marking	All	Comparison to the list	(1) The decided type and quantity	Alteration or Return
	Appearance	All	Visual check	(1) No coat, wound, distortion, dirt and leak (2) The proper curing	Alteration or Return

Table8 Inspection under construction (e.g.)

Time	Item	Object	Method	Estimation standard	Step
After the installation	Installed position	All	Visual check	(1) The decided aspect of installation and type	Alteration
	Joint to the main structure	All	Visual check	(1) The tightened state and decided number of bolts	Re-tightening
	Interference with the main structure	All	Visual check	(1) No obstruction in the range of work	Alteration
	Interim fastener	All	Visual check	(1) No interim fastener (in the case it is used)	Removal
	Appearance	All	Visual check	(1) No peeling of coat and rust	Alteration
	Curing	All	Visual check	(1) The proper state of curing (in the case of wall type)	Alteration

Table9 Completion inspection (e.g.)

Time	Item	Object	Method	Estimation standard	Step
After the completion	Interference with the main structure	All	Visual check	(1) No obstruction in the range of work	Alteration
	Appearance	All	Visual check	(1) No strange deformation and wound (2) No red rust (3) No change of the marking positions of bolts or nuts (4) No leak of viscous material and peeling of coat	Alteration or Return

CONCLUSIONS

This paper is the part of the manual for building passive control technology by the Response Control Committee of the Japan Society of Seismic Isolation. It is hope that the appropriate viscous dampers will be selected for the passively-controlled buildings by this paper.

REFERENCES

1. Kasai, K., and Kibayashi, M., 2001, “Principles and current status of manual for design and construction of passively-controlled buildings”, Proc. Passive Control Symposium 2001, Yokohama, JAPAN, pp.23-32
2. Aseismic Devices Co., Ltd., “Viscous damping wall technical information”
3. Oiles Corporation, “Viscous wall damper technical information”
4. Sumitomo & Mitsui Construction Co., Ltd., “Rotary damping tube technical information”
5. Bridgestone Corporation, “Extrusion damper technical information”
6. Meiyu Airmatic Co., Ltd., “Taylor fluid viscous damper technical information”
7. Oiles Corporation, “Binghum damper technical information”
8. Oiles Corporation, “Oiles general catalogue of earthquake isolation and vibration damping”