Earthquake Engineering, Tenth World Conference © 1992 Balkema, Rotterdam. ISBN 90 5410 060 5

Engineering properties of undisturbed gravel sample

Yoshio Suzuki & Munenori Hatanaka
Takenaka Corporation, Tokyo, Japan

Takaaki Konno
Kajima Corporation, Tokyo, Japan

Kenji Ishihara
University of Tokyo, Japan

Kinji Akino
Nuclear Power Engineering Center, Tokyo, Japan

ABSTRACT: The basic policy in Japan is to build nuclear reactor building on rock. But, in order to cope with the middle and long term siting problems it has become necessary to develop new siting technology from the standpoint of expanding the available range of site selections and effective utilization of lands. The gravel layer in the quaternary deposits has high possibility of becoming the bearing soil stratum when building a nuclear power plant. In order to verify the seismic stability of such gravel soil layers, a series of laboratory tests using a large scale triaxial test apparatus was done on high quality undisturbed gravel samples obtained by in-situ freezing method. Herein reported are the sampling method of high quality undisturbed samples, laboratory test method and test results.

1. INTRODUCTION

The investigation of the siting technology reported herein is an entrusted project to Nuclear Power Engineering Center (NUPEC) from Ministry of International Trade and Industry of Japan (MITI), and has been executed under the cooperation of academic and industrial groups. The planning on verification of soil seismic stability was commenced in 1983, and large scale field tests were conducted from 1987 to 1988 at the Tadotsu Engineering Laboratory, Kagawa Prefecture, Japan, of NUPEC.

For the field testing, two soil column models with 10m in diameter but with different depths of 5m and 9m, a concrete block model weighing 30MN with earth contact pressure equivalent of actual reactor building, and a reaction block weighing approximately 50MN were built, and the verification test of soil seismic stability was executed by dynamic and static loading tests. Moreover, to supplement the field conditions, laboratory tests simulating the seismic input were performed using scaled-down models.

The objectives of this paper is to present the soil profile of the test site, sampling method, laboratory test method and test results on high-quality undisturbed gravel samples which were performed in 1985 to 1986.

2. SOIL PROFILE OF THE TEST FIELD

Shown in Fig.1 are; typical soil layer composition of the test field, penetration resistance value (N and Nd) of the standard penetration test(SPT) and the large scale penetration test(LPT), and the distribution of the shear wave velocity(Vs) it along the depth obtained by the down-hole method. The test site is composed of reclaimed soil of dredged material 11 m in thickness from the surface, and a diluvial gravel layer at depth 11 m to 20

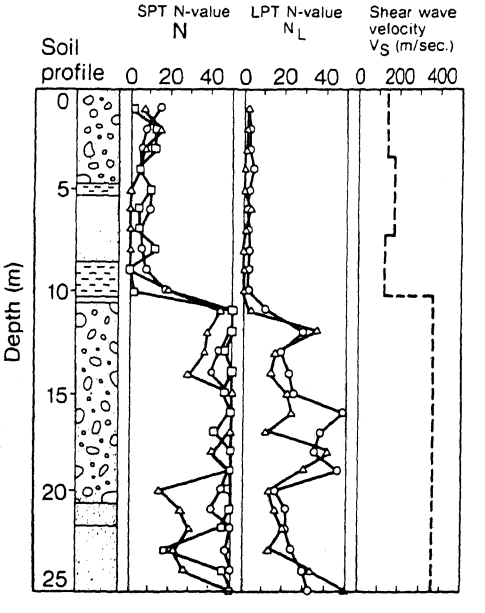

Fig.1 Soil profile of test field

m. This gravel layer has Vs=380 m/sec with N values 40 and 50. The value of Nd in this gravel layer is between 15 and 40.

3. METHOD FOR OBTAINING HIGH-QUALITY UNDISTURBED GRAVEL SAMPLE

It is well known that soil properties obtained by laboratory tests are influenced largely by sampling method (Yoshimi et al, 1984;Hatanaka et al, 1985, Hatanaka et al, 1988). Therefore, the in-situ freezing sampling method which is considered the best in the present state-of-the-art technique was adopted to recover high-quality undisturbed samples.

3.1 Installation of freezing pipes

A 140 cm hole was drilled down to a depth of 12.6 m using the earth drilling machine (Fig.2(a)). Five guide pipes fixed by two steel plates at both ends were installed into the bottom of the 140 cm hole in order to exactly determine the locations of the freezing pipe and sampling places.
With the guidance of the 164 mm steel pipe, a hole of about 76 mm in diameter was drilled up to a depth of about 20.0 meter. A steel tube 73 mm in diameter was installed into the 76 mm hole down to a depth of about 20.0 m(Fig.2(b)). A stainless steel pipe 21.7 mm in diameter was placed in the 73 mm steel tube. The liquid nitrogen supplied from the upper end of the stainless steel pipe flows down to the bottom of the pipe and rises in the annular space between the two freezing pipes.

3.2 Ground freezing and undisturbed sampling

Liquid nitrogen was supplied from a tank lorry for about 160 hours to freeze the soil around the 73 mm steel tube to a diameter of about 140 cm as shown in Fig.2(c).
Sampling of frozen soil from the undisturbed area was done by lowering the double-tube

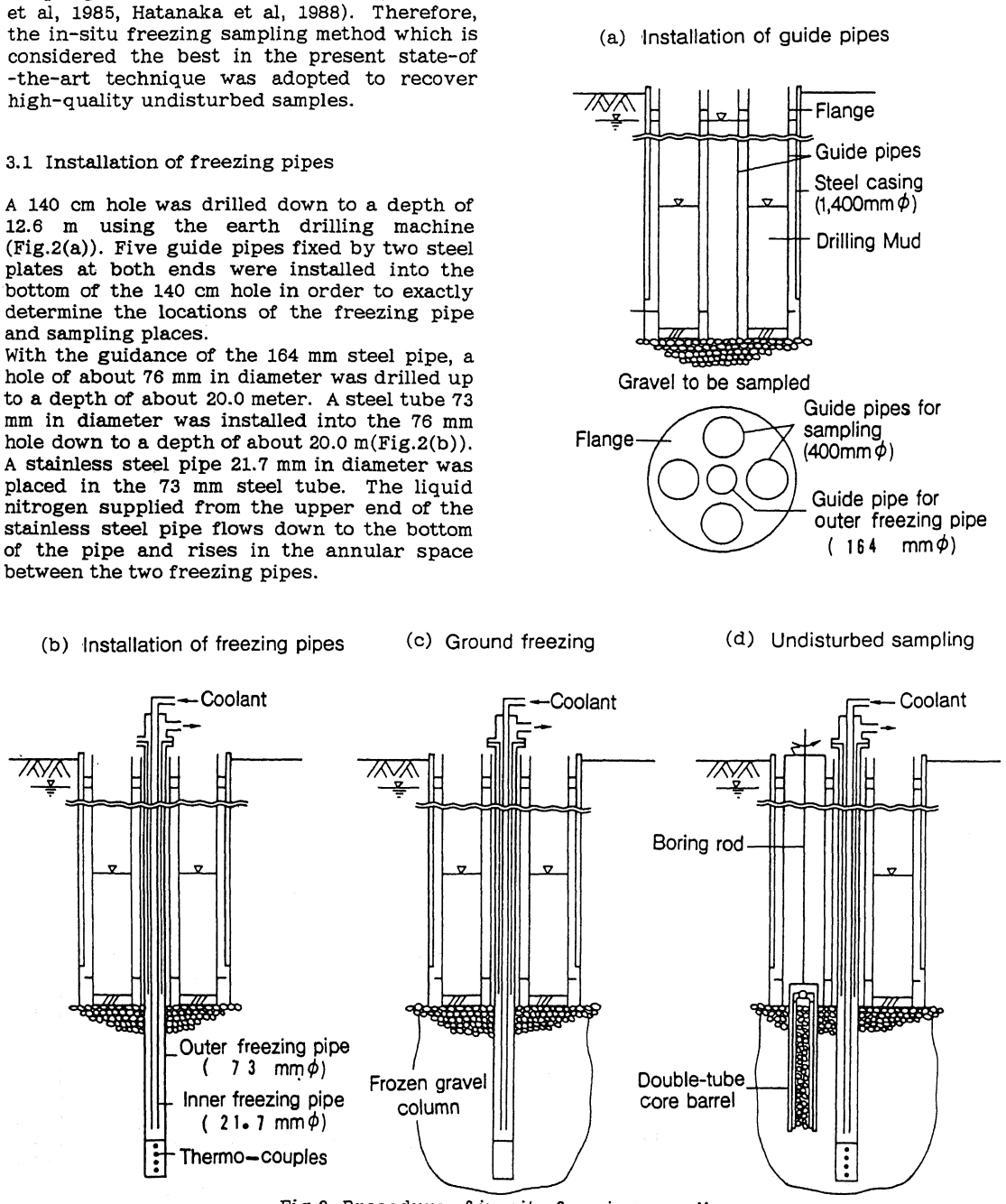

Fig.2 Procedure of in-situ freezing sampling

core barrel by rotating it with a boring machine using chilled mud (Fig.2(d)).
The frozen sample has been cored in the inner tube and pulled up using a center-hole jack. The tensile load required to cut the frozen sample from the ground ranges 6 to 13 tons. It took about 16 to 35 minutes for lowering the core tube about 100 cm in depth. Fig.3 shows the frozen sample cored in the double-tube core barrel.

3.3 Specimen preparation

Preparation of the undisturbed test specimen was performed in the field. After the frozen sample was pulled out from the inner tube of the double-tube core barrel, it was cut to a length of 60 cm with a special saw.
Fig.4 shows a close-up of the cylindrical surface and the end of the prepared specimen. The perfect smoothness of the surfaces cut, minimizes the effects of membrane penetration. In previous studies, this effect has been considered to be significant for reconstituted specimens of gravel.
According to the method shown in Fig.2, 20 samples each 30 cm in diameter and 60 cm long, were prepared for laboratory test. Table 1 shows the physical properties of the undisturbed gravel samples tested. The specific gravity of the soil particle is 2.65.

4. TEST APPARATUS AND TEST METHOD

Five different types of laboratory tests were performed on undisturbed gravel samples using a large scale triaxial test apparatus as shown in Fig.5.
The specific laboratory test methods were; (1) undrained cyclic strength test(liquefaction test), (2) cyclic deformation test, (3) consolidated drained triaxial compression test, (4) isotropic compression and expansion test and, (5) test for obtaining volume change characteristics during cyclic shear. However, only the test results of test method (1) to (4) are shown in the present paper because of the limited space.
The confining stress was applied pneumatically and the cyclic load applied by hydraulic pressure. The load cell and non contact type displacement sensors were placed inside the cell to determine the stress-strain relationship reliably at low strain levels. The LVDT was installed outside the cell for measuring large strain in test method (1) and (3). The volume change during isotropic compression and expansion test was measured by differential pressure transducer.
All the cyclic tests were conducted by applying uniform sinusoidal cycles of deviator stresses at a frequency of 0.01 Hz. The low frequency was selected in order to maintain the constant deviator stress amplitude and also for measuring the axial and volumetric strain accurately.

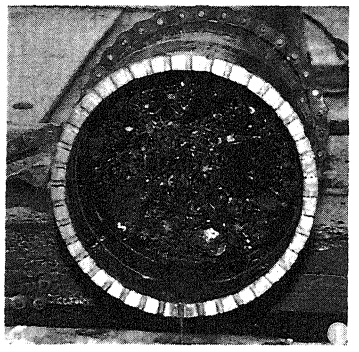

Fig.3 Frozen gravel sample in a core-barrel

Fig.4 A close-up of the sample surface

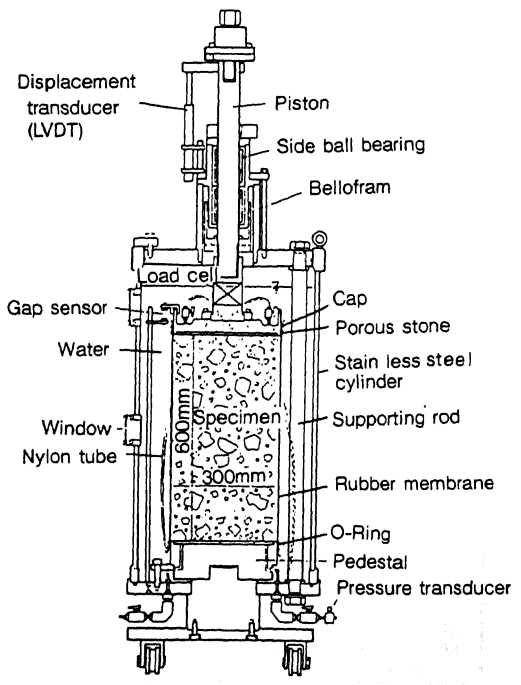

Fig.5 Large scale triaxial test apparatus

5. TEST RESULTS

5.1 Undrained cyclic strength

The test results on both undisturbed and reconstituted samples obtained by undrained cyclic triaxial test are shown in Fig.6 where it can be seen that the undisturbed samples show a high value of cyclic shear stress ratio of 0.44 required to cause a double-amplitude axial strain of 2.5 % in 20 cycles of load application. The strength of reconstituted samples is only about one half that of the undisturbed samples, and the strength of the in-situ gravel soil will be underestimated using the reconstituted soil.

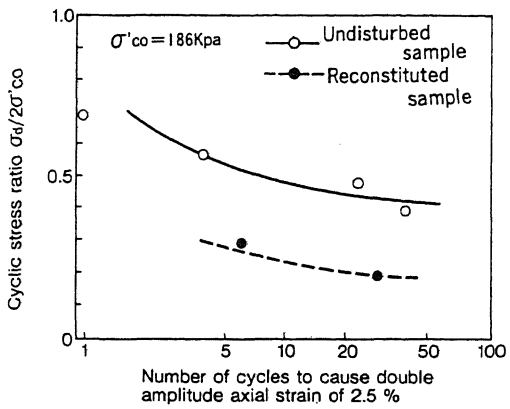

Fig.6 Undrained cyclic shear strength

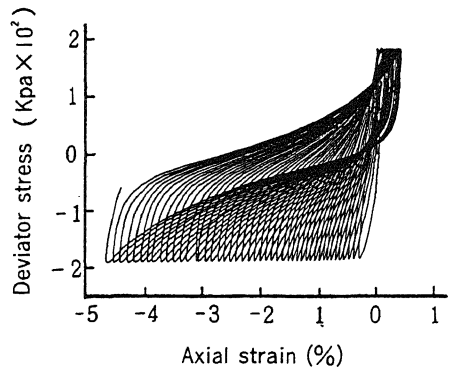

Fig.7 Stress-strain relationship under cyclic undrained shear

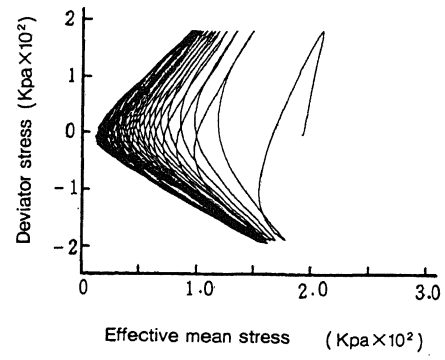

Fig.8 Stress path under undrained cyclic shear

Table.1 Physical properties of undisturbed gravel specimen tested

Kind of test		Sampling depth GL-(m)	10% diameter (mm)	50% diameter (mm)	Maximum diameter (mm)	Uniformity coefficient	Fines content (%)
①Undrained cyclic strength test	1	17.70	0.91	9.2	100	14.2	0.60
	2	17.80	0.76	10.5	150	20.8	0.62
	3	18.00	0.47	6.0	85	19.8	0.43
	4	18.25	0.72	10.0	150	20.9	0.59
②Cyclic deformation test	1	14.90	0.39	12.0	115	43.6	0.58
	2	14.90	1.05	17.1	110	21.7	0.46
	3	15.35	0.36	2.9	85	21.7	1.34
	4	15.95	0.67	7.0	105	14.9	0.27
	5	18.95	0.60	11.5	105	25.3	0.80
	6	19.30	0.44	12.8	110	39.3	1.11
③Static drained strength test	1	15.55	0.42	5.5	95	22.9	1.31
	2	16.30	0.85	8.9	95	15.1	0.74
	3	16.80	0.40	11.9	70	41.8	1.91
	4	16.90	0.46	13.0	115	38.0	1.92
	5	17.05	0.29	8.5	100	50.0	2.64
	6	17.30	0.28	9.4	85	56.4	2.61
④Isotropic compression and expansion test	1	15.85	0.93	9.5	70	14.0	0.56
	2	16.25	1.09	13.9	75	17.3	0.41
⑤Cyclic volumetric strain test	1	14.90	1.05	17.1	110	21.7	0.46
	2	15.35	0.36	2.9	85	21.7	1.34

Fig.7 shows typical stress-strain relationships of the undisturbed specimen under the cyclic stress application. The stress strain relationships show the so-called reverse-S curves which resemble the stress-strain relationship observed for undisturbed dense sand as reported by Yoshimi et al.(1984). We can also clearly see that axial strain progresses significantly on the extension side. Fig.8 shows a stress path of the undisturbed gravel specimen during the undrained cyclic shear.

5.2 Cyclic deformation characteristics

Test results obtained by cyclic undrained triaxial test is shown in Fig.9. For comparison, the results of reconstituted samples are also shown. The shear modulus, G, obtained by reconstituted samples are only about one half of that of the undisturbed samples, and as in the case with strength evaluation, it indicates that the deformation characteristics of the in-situ gravel soil cannot be evaluated by reconstituted samples.
Fig.10 shows the relation of the shear modulus, G, at small strain($=10^{-5}$) and the confining stress, and on both logarithm coordinates the straight line relation is almost observed. The slope of its straight line is about 0.8, which is larger than the value of 0.5 commonly known for sand. This fact means that in the gravelly soils, effects of confining stress upon the shear modulus is more significant than that for the sand.

5.3 Static strength characteristics

The Mohr's circles at failure obtained by consolidated drained triaxial compression tests are shown in Fig.11. The internal friction angle of the undisturbed specimen is 36 to 37 degree, and the cohesion is 24.5 to

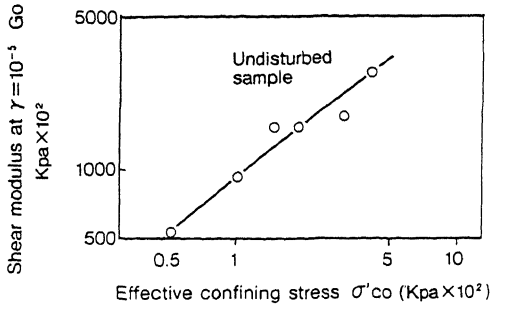

Fig.10 Relationship between Go and σco'

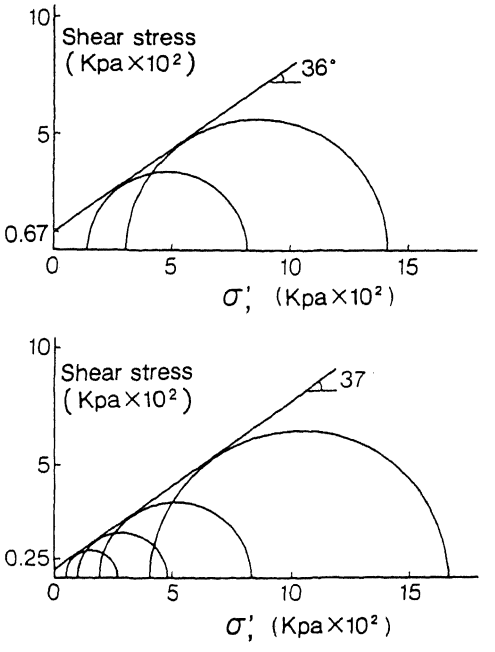

Fig.11 Mohr's circle and yield locus

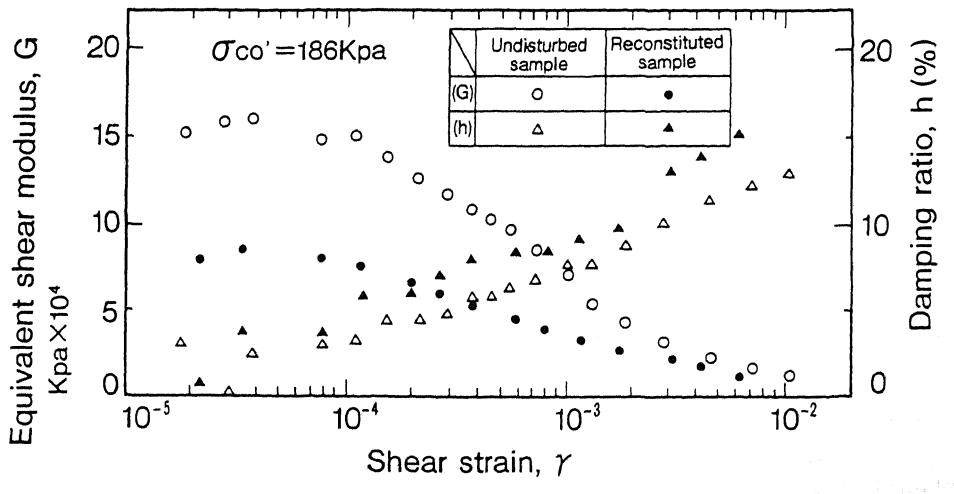

Fig.9 Geq~γ, h~γ relationships

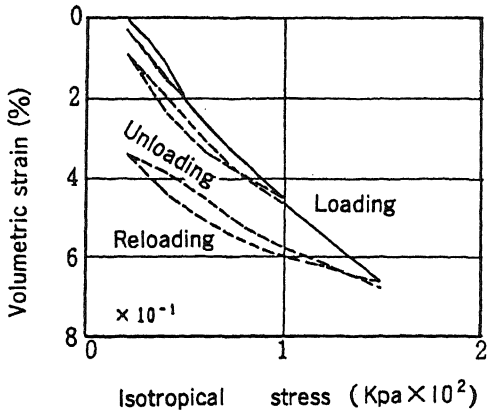

Fig.12 e-logp relationship under isotropic compression and expansion

66.6 kPa. The internal friction angle, ϕ'd, estimated from N value(on the average, N=43) using the empirical formula equation(1), which is proposed by Dunham for design purposes, is 48 degree. There is big difference between the estimated value and the measured value on the undisturbed samples.
However, there is some cohesion component that may be considered in the actual design works.

$$\phi'd = 12N + 25 \quad (1)$$

5.4 Isotropic compression and expansion characteristics

The coefficient of volume compressibility and the coefficient of volume expansion were also measured using large scale triaxial test apparatus on undisturbed samples as follows:
(1)After the undisturbed sample had been thawed and saturated, it was stressed isotropical under an initial effective stress of 19.6 kPa.
(2)After that the isotropical stress was increased to a certain level, and then unloading to the initial isotropical stress of 19.6 kPa.
(3)And then again the isotropical stress was increased to a certain value larger than that used in the former loading step.
Fig.12 shows an example of relationship between the isotropical stress and the induced volumetric strain. From the Fig.12, the coefficient of the volume compressibility is ranging from 1.4×10^{-3} to 6.7×10^{-3} kPa^{-1}, and the coefficient of volume expansion is between 2.1×10^{-3} and 5.7×10^{-3} kPa^{-1}.

6. Conclusions

High quality undisturbed gravelly samples were obtained from a depth of 11m below the ground surface by the in-situ freezing method. Five different types of laboratory tests were performed on undisturbed gravel samples using a large scale triaxial test apparatus. The following conclusions are obtained through laboratory tests.

(1)There is a significant difference of liquefaction strength between undisturbed and reconstituted specimen. For example, the stress ratio required to cause double amplitude shear strain of 2.5 % in 20 cycles of stress application for the undisturbed specimens is about twice the value of the reconstituted specimens.

(2)Compared with the reconstitued specimens, the shear modulus of the undisturbed specimens is about 50 % higher in the range of shear strain level smaller than 10^{-2}. The damping ratio of the undisturbed specimen is about 20 to 30 % smaller than that of the reconstituted specimens.

(3)The initial shear modulus (when $\gamma=10^{-5}$) has a larger dependency on confining stress than that of sand.

(4)The internal friction angle, ϕ d, is ranged between 36 and 37 degrees, which is not so large as was expected for their high SPT N-values. On the other hand, a cohesion ranges 24.5 to 66.6 kPa was observed.

ACKNOWLEDGEMENTS

This work was carried out by NUPEC as the project sponsored by the Ministry of International Trade and Industry of Japan. This work was reviewed by "Committee of Verification Test on Siting Technology for High Seismic Structures" of NUPEC. The authors wish to express their gratitude for the cooperation and valuable suggestions given by every committee member.

REFERENCES

1)Yoshimi,Y., Tokimatsu,K., Kaneko,O. and Makihara,Y. (1984): " Undrained cyclic strength of a dense Niigata sand," soils and Foundations, Vol.24, No.4, pp.131-145.
2)Hatanaka,M., Sugimoto,M. and Suzuki,Y. (1985): "Liquefaction resistance of two alluvial volcanic soils sampled by in-situ freezing," Soils and Foundations, Vol.25, No.3, pp.49-63.
3)Hatanaka,M., Suzuki,Y., Kawasaki,T. and Endo,M. (1988): " Cyclic undrained shear properties of high quality undisturbed Tokyo gravel" Soils and Foundations, Vol.28, No.4, pp.57-68.