Earthquake Engineering, Tenth World Conference © 1994 Balkema, Rotterdam. ISBN 90 5410 060 5

Concepts and techniques for seismic base-isolation of structures

Anand S. Arya
University of Roorkee, India

ABSTRACT: This paper briefly reviews the concepts, techniques applicability and benefits of using base-isolation in structures in severe seismic zones. It is a passive way for achieving seismic response control by introducing various types of isolators between the foundation and the superstructure. The system has to perform three functions; horizontal flexibility, energy dissipation and rigididity against normal lateral loads. The rubber-lead bearing appears to be the best isolator so far, performing all three functions efficiently. Performance of isolated buildings during earthquakes in Japan shows clearly the achievement of desired reduction in seismic response of buildings. Conditions favouring the choice of base-isolation alternative compared to conventional elastic or elasto-plastic design are indicated. The base-isolation of masonry buildings through a planned sliding joint is also described.

1 CONVENTIONAL ASEISMIC DESIGN APPROACH

As is well known from actual ground acceleration records during earthquakes, obtained near and away from the sources, the ground motion consists of positive and negative peaks of varying amplitude and time intervals between them in any three mutually perpendicular directions chosen for recording. In the whole record the duration of which could be few seconds to few minutes depending on the earthquake magnitude and the type of source, the motion is particularly intense over a short time duration (Fig. 1) which is the main cause of damage of structures and their contents, structural as well as non-structural.

The structures are normally built firmly attached to the ground. Therefore naturally they receive all the ground movements at their base. The seismic response of any structural system for a given base motion depends on the mass, stiffness and damping distribution in the system. This response for linear elastic systems to a given earthquake time history is most conveniently represented by acceleration response spectra, the main features of which are the following (Fig. 2):

i) For zero period of absolute acceleration response is equal to the peak ground acceleration.

ii) For low periods (that is the stiff system), the response gets amplified, it is highly peaky and becomes several times

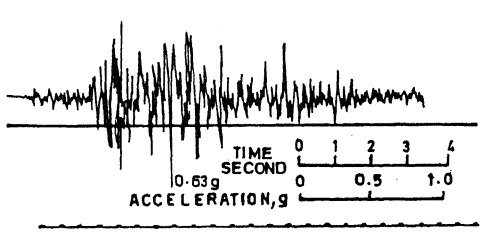

FIG.1_ACCELEROGRAM OF KOYNA EARTHQUAKE (DEC.11,1967) ALONG AXIS OF DAM

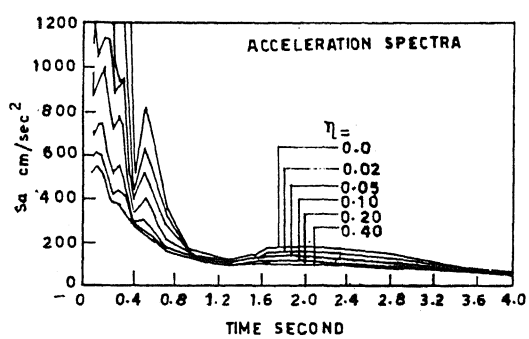

FIG.2_RESPONSE SPECTRA FOR ELASTIC SYSTEMS (KOYNA EARTHQUAKE, Dec.11.1967 CUMPOMENT ALONG AXIS OF KOYNA DAM)

the peak ground acceleration. The amplification is significantly affected by damping in the system, being lower for higher damping.

iii) For long period (flexible systems) the acceleration response curve is smooth and lower than the peak ground acceleration, tending towards zero. Here the significance of damping is very much reduced. Unfortunately most engineering structures and system lie in the low to medium period range hence subjected to very large inertial forces.

Our approach for seismic design at present is to 'confront' the brute forces as generated by the earthquake shaking. That is, the inertial forces are taken into account by designing a strong structure. This approach results in increasing the size of structural members and connections and providing additional bracing members and shear walls, etc. Now, since in most structures, full catering for these elastic response forces will require very large additional financial inputs over those for normal conditions without earthquake consideration, a strategy of design is employed, which is different than that used for usual loads. It may be called 'fail-safe' design approach. For economical reasons, a 'non-collapse' design is aimed at rather than a 'no-damage' design, that is, the structure is designed for 'lower-than-expected' seismic forces so as to remain in the elastic range and, for the expected maximum seismic motions, it is allowed to go into plastic stage with sufficiently large deformations or, damage to non-structural and structural elements but ensuring that collapse is avoided. Energy absorption through plastic deformations or minor damages is known very well as capable of reducing the dynamic response effectively. This puts a great responsibility on the designer who should ensure that the structure should possess enough ductility and energy absorption capacity without strength deterioration throughout the seismic time-history of future probable earthquake motions, since buildings designed for code-based seismic forces without the requisite detailing for ductility, are likely to collapse in severe ground motions as happened in the case of nine-storeyed prefabricated framed R.C. buildings in Spitak (Armenia) earthquake of Dec. 7, 1988. Well designed and properly detailed steel and reinforced concrete structures do exhibit such non-collapse characteristics.

2 RESPONSE CONTROL APPROACH

The above-stated approach does ensure safety of lives and properties that would have suffered due to collapse of structures but leaves a number of uncertain questions: how much will be the cost of the damaged non-structural elements, how functional will remain the damaged/deformed structure, what will be the economic losses due to stoppage of transportation, communication, etc. and what economic losses will occur due to the damage of contents of the shaken building. The scenario in this regard will be different between developed and developing countries like Japan and India, between the urban and the rural areas such as Delhi and the area around it, between a zone of very frequent earthquake occurrences and one with infrequent occurrence. In developed and the urban areas, the concerns are increasing for continuity of life-lines besides the basic issue of saving of lives, and keeping the economic losses to the minimum. The need has arisen to consider modifying the design strategy from 'confrontation', to 'accomodation' of the ground motion through 'base isolation'. In this approach, the structure is not attached to the ground firmly but through devices which will transfer the movements of the ground only partially to the structure, more particularly cutting down the intense peaks of the ground motion. The aim therefore is to reduce the structural response to such levels that it should remain safe without damage, hence to achieve a 'no-damage' or 'safe' structure. Since in this approach, the intensity of shaking of the structure could be made less than that of the ground, the contents and non-structural elements will also be relieved of intense shaking, hence should remain undamaged. Thus the economic losses also will either be prevented altogether or reduced to a minimum.

Besides seismic base isolation, other concepts for 'seismic response control' have also been introduced and developed like use of energy dissipating devices and resonant mass damper. This paper aims at presenting these concepts in general and the developments that have taken place in the area of seismic base isolation in particular.

3 SEISMIC RESPONSE CONTROL CONCEPTS

The concept of seismic response control of structural systems can be understood with reference to the acceleration reponse spectra given in Fig. 2 from which a number of possibilities emerge to reduce response as follows (2):

First, if flexibility could be introduced in the system for given mass and damping to elongate its period considerably, the response could be brought down substantially and to the desired level of 'no-damage' situation. This is a very

attractive proposition and has given rise to various techniques to achieve the aim.

Second, if damping could be increased without changing the mass or stiffness, the peaks in the response will be eliminated and the response reduced considerably, particularly in the low period range.

Third, the effective vibrating mass could be altered at appropriate instants of time history so as to significantly reduce the amplification of the main structural system.

Fourth, attempt coud be made to alter the base motion, hence the response, by an active dynamic actuator system which is actuated by the structural response, continually analysed and monitored through a dedicated computer system.

Fifth, a combination of some of the above approaches may be attempted with a view to evolve an effective, reliable and economical control mechanism to achieve 'no-damage' design for the structure (including its contents) in question.

In order to have a common understanding of the various systems and the terms used for them, the following classification has been recently proposed based upon three points of view (13):

1. Classification based on Basic Principles of Dynamics
   - i) A method to control and adjust restoring forces characteristics.
   - ii) A method to control and adjust damping.
   - iii) A method to control and adjust mass.
   - iv) A method to adjust input motion (a combination of above methods).
2. Classification based on Realization Procedure
   - i) Passive way
   - ii) Active way
3. Classification based on Installed Location
   - i) External types (like base isolation)
   - ii) Internal types (internal elements)

According to the above classification, the seismic base isolation is an external type, works in passive way and provides a method of seismic response control by adjusting stiffness and damping.

4 BASE ISOLATION FUNDAMENTALS AND DEVIES

As stated above the fundamental principle of base isolation is to introduce flexibility at the supports of a structure in the horizontal plane so as to ensure that the time period of the structure is well above the predominent periods of the probable earthquake. Now in this process, the relative displacement amplitude increases, hence often damping or restraining elements have also to be introduced simultaneously to restrict the extent of relative movement caused by the earthquake. Although this principle is not new, its practical exploitation has occurred only recently in the last about 15 years during which suitable hardware of isolating devices has been developed and actually applied to some constructions of buildings, bridges and atomic power plants. A short list of references is attached.

There are three basic elements in any practical base isolation system. These are as follows:

1. Decoupling between the superstructure and the base with or without flexible mounting so that the effective period of vibration of the total system is lengthened sufficiently to reduce the force-response.
2. A damper or energy dissipator so that the relative displacements between the structure and its supports can be controlled; and
3. A means of providing rigidity under low in-service load levels such as wind and minor earthquakes so that the structure behaves as if fixed at base during normal service loads.

These are considered in some detail herebelow :

4.1 Flexibility

The vibration-isolation principle is frequently used for reducing the transmission of machine vibrations to the buildings by mounting the machine on flexible pads or springs. The isolators used therein are mostly meant for vertical vibration reduction. For seismic protection, introduction of horizontal flexibility is actually necessary, and the vertical flexibility is rather undesirable. Therefore, the isolators must maintain vertical rigidity while allowing horizontal flexibility. Steel roller or rubber bearings as used in the bridges for providing longitudinal movements fulfil these objectives. These rubber bearings are constructed in layers by sandwiching steel shims between each layer and bonding together by gluing. The steel shims constrain the lateral deformation of the rubber under vertical load resulting in vertical stiffness several hundred times the lateral stiffness. These bearings are found very practical for use in buildings also. Other possible devices for introducing flexibility include spherical balls, cylinders with spherical ends, cable suspensions, pinned or soft storey columns, sleeved piles and sliding or rocking

arrangement as indicated schematically in Fig.3.

The acceleration response spectra of the maximum probable earthquake for a major project in India are shown in Fig.4. Substantial reductions in the acceleration are clearly seen when the period of vibration of the structure is lengthened from 0.4 sec to 2.0 sec. Such a reduction in force response is primarily dependent on the characteristics of the earthquake ground motion and the original period of the fixed-base structure.

The force reduction effects are most significant where the intense part of earthquake record has predominantly short to medium range of periods say less than about 0.5 sec and also the fixed base structure is stiff type, so that the isolation system takes the structure to well beyond the peak response.

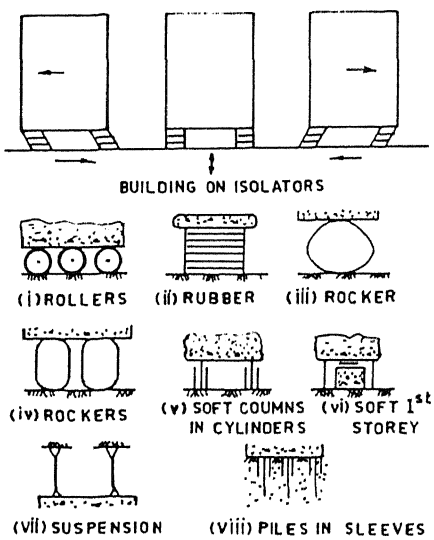

FIG.3_BASE ISOLATION DEVICES

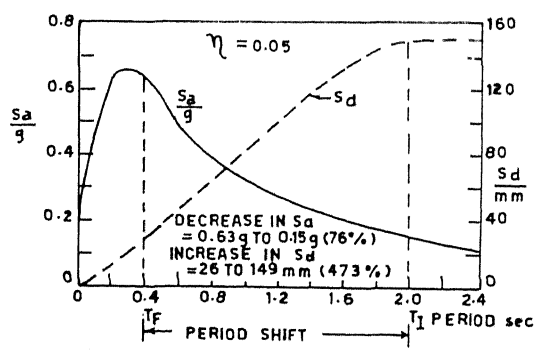

FIG.4_ACCELERATION AND DISPLACEMENT RESPONSE SPECTRA FOR DESIGN MCE

Simultaneously the additional flexibility of the structure gives rise to large relative displacements across the flexible mount. This would also be clear from Fig. 4 in which an idealized displacement repsonse curve is also shown where displacements are seen to increase with increasing period. The displacement problem has to be overcome by introducing higher damping alongwith the flexible mount or restrainers/stoppers have to be introduced to restrain the displacement reaching undesirable values.

4.2 Energy Dissipation

The dissipation of kinetic energy during seismic ground motions put into the conventional fixed-base structures takes place by internal damping, friction damping at the supports, and radiation damping through the base and side soils. The damping available in the undamaged small deformation state is rather low, less than 4% of critical in most cases. This value does increase with large plastic deformations and damage. But for 'no-damage' design approach such an increase will be undesirable and not to be relied upon. Therefore, where required in base isolated systems, additional damping has to be introduced externally.

One of the effective means of providing a substantial level of damping is through hysteretic energy dissipation. The term hysteretic refers to the cyclic nature of building vibrations in which energy is dissipated as the building moves from side to side. Figure 5 shows an idealized force-displacement loop where the enclosed area is a measure of the energy dissipated during one cycle of motion.

Mechanical devices which use the plastic deformation of either mild steel or lead to achieve this behaviour have initially been developed in New Zealand by the Department of Scientific and Industrial Research. Several mechanical energy dissipation devices are shown in Fig. 6. These include round steel bar cantilevers (Fig.6a,b,e,e', flexural beam (Fig. 6c,c'),

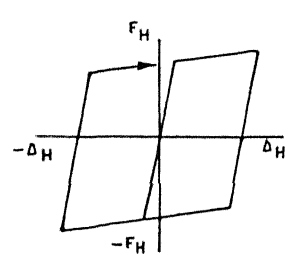

FIG.5_HYSTERETIC ENERGY DISSIPATION

spiral bar (Fig. 6d) and plate cantilevers (Fig. 6f). Another form of energy dissipation is through sliding friction (Fig. 6g). Mild steel bars in torsion and cantilevers in flexure have been tested, refined and are now included in several bridge structures.

Dampers using fluid viscosity and the energy dissipation through shearing of lead cylinder are shown in Fig.7. The lead extruction and lead shear devices have also developed to a high level of sophistication. Lead is a crystalline material which changes its crystalline structure under deformation, but almost instantly regains its original crystal structure when the deformation ceases (See Fig. 7b). For this reason, lead exhibits excellent hysteretic damping properties over many repeated cycles of earthquake motion.

The most highly developed and practical dissipator is the lead-rubber device in which a cylinder of lead is enclosed in an elastomeric bearing as shown in Fig. 7(c). It combines in one physical unit the flexible element and the energy dissipator. In this application the lead is forced to deform plastically in shear by the steel shim plates. Excellent energy dissipation is possible with this device as shown in Fig. 7(c') and 7(c''). Recent work at the University of California at Berkeley and also the University of Auckland in New Zealand has improved the performance of this device to the point where it can be used in practical applications with the same confidence as with other building materials such as steel or concrete.

4.3 Rigidity under low lateral loads

While lateral flexibility is highly desirable for high seismic loads, it is clearly unacceptable to have a structural system which will vibrate perceptibly under frequently occurring loads such as minor earthquakes or wind loads. Therefore, it is necessary that the flexible mount should have high enough initial stiffness and elastic resistance to balance the specified low lateral loads such as the wind loads and the low earthquake forces specified for elastic design in the applicable standard code of practice in the country such as IS:875 and IS:1893 respectively in India.

The lead-rubber bearing and other mechanical energy dissipators provide the desired rigidity against low loads by virtue of the initial elastic stiffness (Fig. 7c'). Some other base isolation systems such as rollers will require a separate restraining device for this purpose like a buffer or spring-dash pot system, or sliding friction type device. An oil damper is shown in Fig. 7a which could be used in parallel with rollers, suspension system etc.

5 SOME EXAMPLES OF BASE-ISOLATION APPLICATIONS

Base-isolation principle has now already been applied to numerous buildings in France, New Zealand, Japan and USA, many bridges in New Zealand and Japan, and a few other structures like chimney stacks and nuclear power plants. In Japan alone, Kitagawa (13) lists 23 buildings permitted by the Ministry of Construction using base isolation upto 1988. These include 22 RC and one steel building, two upto 10 stories in height and building are a varying from 60 sqm to 8340 sqm. The isolating and energy dissipating devices used in these structures include the following types:

Isolators : layered rubber bearings
Dampers : round steel bars; lead cylinder in rubber bearings; sliding friction; viscous dashpot, and high-damping rubber

By far the most used device is the rubber-lead bearing (RLB) which performs all the functions of initial high enough stiffness, period elongation of the superstructure and energy absorption through shearing of lead cylinder. The actual earthquake behaviour of buildings on isolators with seismometers installed in the buildings has been observed in Japan. Two case studies are described in brief herebelow:

1. The Okumura Tsukuba Institute building constructed in 1986 consists of reinforced concrete four storeyed framed building resting on twelve laminated rubber bearings and provided with eleven sets of spiral steel dampers. The instrumentation consists of nine accelerometers, eight displacement meters, two velocity meters and an anemometer. Free vibrations tests conducted with increasing amplitudes indicated that

-when without damapers the free vibration period was almost constant at about 1.9 sec, the damping value lying between 2 to 5% of critical.

-but with dampers the period elongated with amplitude from 1.4 sec to 1.7 sec and damping ratio increased due to hysteretic behaviour of the steel damper from about 4% to 11% of critical.

The building was shaken by two real south-western Ibaraki earthquake, first on April 10, 1987 with 5.1 magnitude and second on June 30, 1987 with M = 5.1. The following peak accelerations were recorded (gals) :

Earthquake	Base	Floor 1	Floor 2	Roof
April 10				
Horiz.x	38.6	11.3	6.1	11.1
Vert.z	18.4	22.2	21.4	20.1
June 20				
horiz.x	203.0	17.0	12.0	20.0

From the observed accelerations, the isolation effect is clearly seen, the superstructure above the isolators is tending to move as one rigid unit with very little inter-storey deformations and the acceleration level is limited to the lateral load capacity of the isolators.

2. The Tahoku University Full Scale Test Buildings are two identical three storeyed buildings, constructed in 1986 at Sendai City in Miyagi Prefecture. One building is conventional, fixed at base, and the other isolated one using six laminated rubber bearings and twelve oil dampers. Free vibration measurement gave the fundamental periods of non-isolated (N.I.) building as 0.228 sec and that of isolated (I) building as 1.37 sec. The acceleration recorded in a number of earthquakes at ground level and the roof of the buildings are summarised in Table 1 from which it is clearly seen that the peak acceleration response in the I-building got limited between 0.1 to 0.16 g when that of N.I.-building varied from 0.45 to 1.5 g. The mean amplification ratio 'roof to ground peak acceleration' was 0.91 for I- and 3.01 for N.I.-building. This clearly shows the large reduction in acceleration response, that is, the seismic forces in the isolated building as compared with the conventional fixed base building.

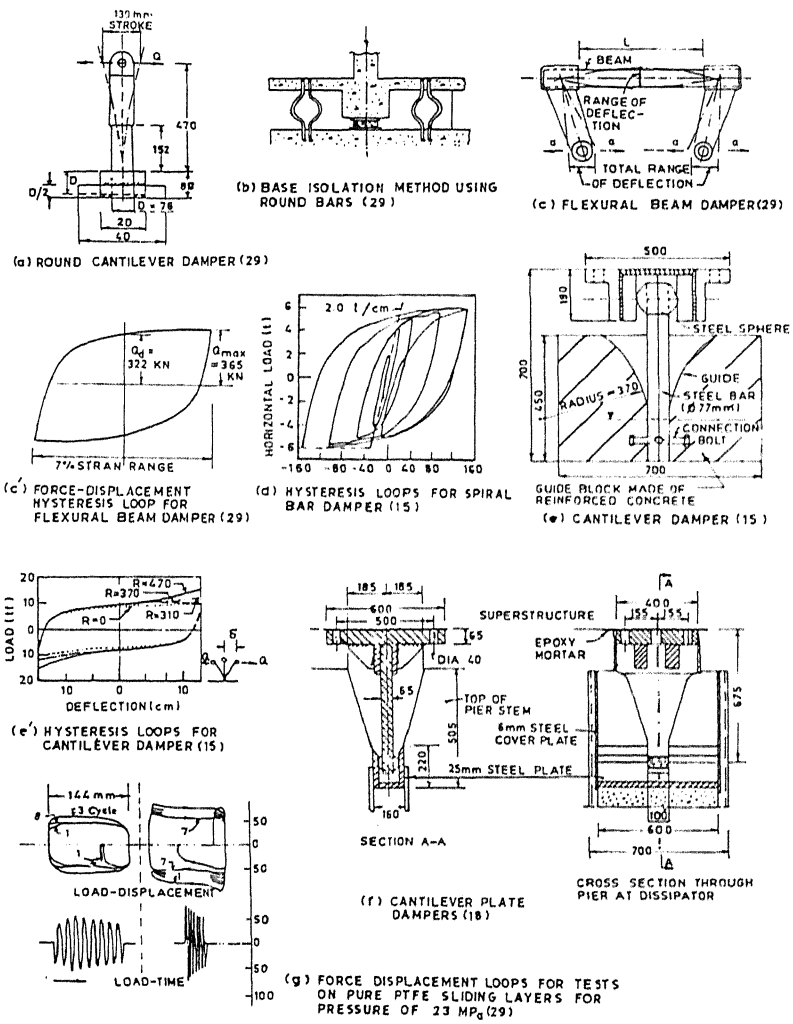

FIG. 6 _ ENERGY DISSIPATION SYSTEMS USING STEEL PLASTICITY

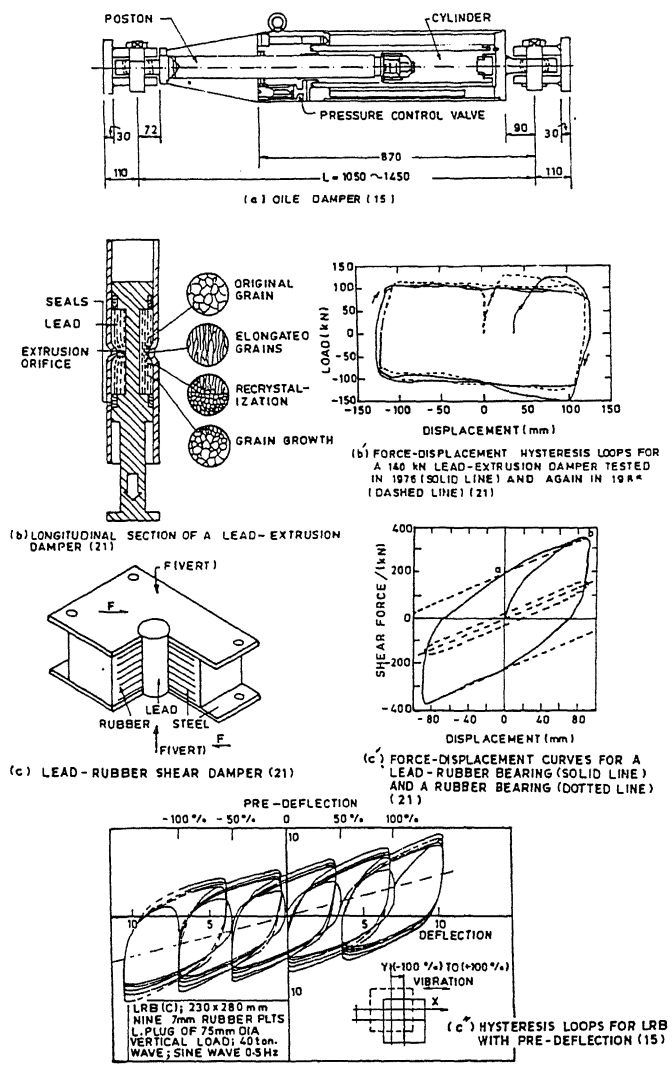

FIG. 7_ ENERGY DISSIPATION DEVICES USING VISCOUS FLUID OR LEAD

Table 1 Observed behaviour of fixed base and isolated identical buildings

S. No.	Quantity Observed	Fixed Base	Isolated
1.	Fundamental period Second	0.228	1.37
2.	magnification of max.resp. acc.(mean of 18 records in Y-Dir.)	3.01	0.91
3.	Peak acc.resp. in Fukushima offing EQ of Feb. 1987 (g-value)		
	X-Dir.	1.50	0.13
	Y-Dir.	0.80	0.16
4.	Peak acc.resp.in Fukushima offing EQ of April (g-value)		
	X-Dir.	0.80	0.10
	Y-Dir.	0.45	0.13

6 BASE ISOLATION OF SMALL MASONRY DWELLING

The base isolation schemes described hereabove cost a great deal more than the conventional fixed base buildings due to (a) the cost of isolator and dampers and (b) the cost of additional reinforced concrete beams or flat slab system for supporting the superstructure above the isolators besides the foundation system below the isolators. Against this additional cost, there will be a saving in the design of the superstructure which could now be designed for smaller earthquake inertial forces. However, for small masonry dwellings, the cost of base-isolator application will rather be prohibitive. Observations in India in 1930

Dhubri earthquake and 1934 Bihar earthquake, and in China during 1976 Tangshan earthquake showed that wherever sliding of the superstructure was possible either by method of construction (e.g. not fixing the wooden columns at base) or by a horizontal crack occurring through the masonry joint, the damage to the building was much less. Hence a simpler methodology was developed and tested analytically as well as experimentally in India (1). The basic concept is to permit sliding of superstructure masonry at plinth level as shown in Fig. 8. The plinth masonry is plastered smooth and oiled to prevent bonding with upper structure. A continuous reinforced concrete band under all walls is provided above it to ensure integral movement of the superstructure which is well bonded to the band through rich mortar of 1:3 cement:sand mix. Alternative to oil, black polythelene sheet could be used. A coefficient of friction of 0.15 to 0.2 is aimed at which would restrain the building from movement under wind and minor earthquakes but permit sliding under severe shocks. The reduction of response accelerations under Koyna 1967 and El Centro 1940 earthquake inputs was seen to be as much as by two-thirds and the maximum sliding displacements were upto 20 mm only. A plinth projecton of 50 mm on both sides of the superstructure wall should suffice to keep the upper walls on the plinth.

In China trial has been made (40) using a thin layer of specially screened sand on the sliding surface and constructing the superstructure on this layer. Some prototype buildings have been constructed on this basis in Beijing (40).

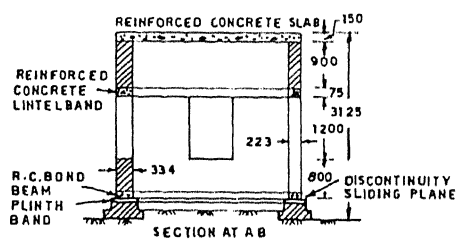

FIG.8 _ SLIDING SYSTEM FOR MASONRY DWELLINGS

7 ADDITIONAL CONSIDERATION

Appropriate details are needed in all isolated buildings to provide un-breakable flexible connections of the service pipes (for water, drainage, sewerage and gas etc.) coming into the building from outside so as to accomodate the relative movements of the building and its base.

8 REDUCTION OF DAMAGE POTENTIAL BY RESPONSE CONTROL

The possible consequences of failures of structural systems (buildings, bridges, power plants and dams etc.) with regard to loss of lives and economic losses etc, are much better understood than those caused due to the failure of non-structural components, equipments and contents. A possible qualitative summary of these is given in Ref. 2. The principles of seismic-base isolation and energy dissipation can not only be applied to whole buildings but also to individual components as well. For example, computer installations, spent fuel storage tanks or battery stacks of atomic power plants, control cabinets and switch yard equipments of power stations, individual objects of art in museums, etc., can be supported individually on isolator systems. Frictional devices can be incorporated between partition walls and frames to dissipate energy during the relative movements.

Another advantage of base-isolation system will be to standardise the plant and equipment design for various sites of different seismicity levels. That is, keeping the superstructure and its components the same, the problem will be to design suitable isolator-dissipator systems for given seismic intensities.

9 CONCLUSION

In conslusion the following initial guidelines are suggested for using the alternative of seismic isolation in place of conventional design and achieving the objectives of desired safety and continuity of functional operations over long periods of time. First, the following conditions appear favourable for choosing the base isolation alternative :

(a) where the subsoil is moderately stiff to hard; and
   (i) the structure is stiff, say two to ten storeys for moment resistant frames, upto 15 storeys for shear walls or braced framed buildings, and taller for box like rigid building systems; or
   (ii) the structure is of crate-like plan in masonry with any number of storeys

(b) where horizontal relative motions at the isolators of upto about 150mm on either side can be permitted.

(c) where the building contains valuable breakable articles, such as museum artefacts, and the effective earthquake force acting on building contents must be reduced.

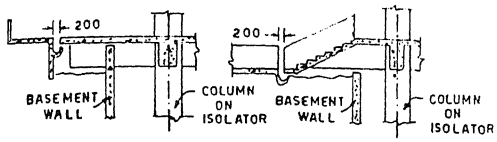

FIG.9_TYPICAL DETAILS FOR CLEARANCE (2)

Second, while designing the building with base isolation system, the following guidelines will be useful :

(a) A full grillage of beams or complete diaphragm plate will be most effective for distributing the vertical and lateral loads to the bearing units.
(b) A clearance greater than the maximum computer bearing displacements for portable maximum earthquakes must necessarily be provided around the building (See Fig. 9).
(c) Appropriate details must be worked out to accomodate the maximum relative displacements across the isolators in service pipes, cladding walls, staircases and elevators etc.
(d) The isolating bearings should have access for inspection and maintenance and possibility of replacing damageable components, if any.

Finally, the following advantages of seismic isolation with energy absorption schemes can be summarised :

(a) The structural deformations going into the inelastic/plastic range and the consequent damage is likely to be completely eliminated; the structure will need designing for much smaller accelerations, hence should be more economical;
(b) the relative storey displacements (drift) will be reduced hence the 'non-structural' damage to cladding, partition walls etc. will be minimised or eliminated altogether; and
(c) the response accelerations at higher floors will be much reduced, hence the damage to equipment, service lines will be minimised.

REFERENCES

Arya A.S., "Sliding concept for mitigation of earthquake disaster to masonry buildings", 8th World Conference on Earthquake Engineering, San Francisco, July 1984, Session WA-6. (1)

"Base isolation of buildings-architectural aspects" Dynamic Isolation Systems, Inc., 2855 Telegraph Ave, Suite 410, Berkeley, CA, USA, 1984. (2)

Beck, J.L. and Skinner, R.I., "The seismic response of a reinforced concrete bridge pier designed to step", International Journal of Earthquake Engineering and Structural Dynamics, Vol.2, 1974, pp. 343-358. (3)

Blakeley, R.W.G., et. al., "Recommendations for the design and construction of base-isolated structures", South Pacific Regional Conference in Earthquake Engineering, Wellington, May 1979(4)

Buckle, I.G., "Factors affecting the performance of lead-rubber energy dissipators", Proc. Bridge Design and Research Seminar, Road Research Unit, Bulletin 73, Wellington, 1984, 157-170. (5)

Charleston, A.W., Wright, P.D. and Skinner, R.I., "Wellington central police station: base-isolation of an essential facility" NZ-Japan W/S, Wellington, 1987. (6)

"Design of lead-rubber bridge bearings", Civil Division Publication 818/A, Ministry of Works and Development, Wellington, 1983. (7)

Dupont, E.I. de Nemoures & Co. (Inc.), "Suggested specifications for filled teflon TFE resins used in bearing pads", Delaware, USA. (8)

Higashio, Aizawa, hayamizu, "An experimental study on a base-isolation system using laminated rubber bearings and viscous dampers", 9th SMIRT Report, August 1987. (9)

"Highway bridge design brief", Civil Division Publication CDP 701/6 New Zealand Ministry of Works and Development, 1978. (10)

Izumi, "Earthquake response observation for base isolated buildings", The Building Letter (Japan), August 1987. (11)

Jolivet, F. and Richli, M., "A seismic foundation system for nuclear power stations", Trans. 4th International Conference Struct. Mech. Reactor Technology, Vol. K(b), August 1977. (12)

Kitagawa Y., "Base isolated building structures in Japan", Quarterly Journal of the Federation Internationale de la Precontrainte Notes 1988/3. (13)

Kumar k. and Arya A.S., "Retrofitting of multispan simply supported bridges for reduction of earthquake forces", 8th WCEE, San Francisco, July 1984, Session FA-5. (14)

Makiguchi Y., "Present status of base-isolated building in Japan", Proc. NZ-Japan W/S on Base Isolation of Highway Bridges, Min. of Works and Dev., Wellington, NZ, Nov. 1987, pp.153-172. (15)

Matsuda, Aoyagi, et. al., "Experimental study on the dynamic behaviour of the base isolated building", 9th SMIRT Report, August 1987. (16)

Meggett, L.M., "Analysis and design of base-isolated reinforced concrete frame building," Bulletin of the New Zealand National Society for Earthquake Engineering, Vol. II, No.4, December 1978, pp. 245-254. (17)

Park, R. and Blakeley, R.W.G., "Seismic design of bridges", Structures Committee Summary, Vol. 3, Road Research Unit, National Roads Board, New Zealand, November 1978. (18)

Robison, W.H., 1982, "Test of ANAC's 140 kN Extrusion Damper", Physics and Engineering Laboratory, Report no. 591, Lower Hutt. (19)

Robinson, W.H. 1982, "Lead-rubber hysteretic bearings suitable for protecting structures during earthquakes", Earthquake Engineering and Structural Dynamics 10: 593-604. (20)

Robinson W.h., Cousins W.J., "Recent development in lead dampers for base isolation", Proc. NZ-Japan W/S on Base Isolation of Highway Bridges, Min. of Works and Dev. Wellington, NZ, Nov. 1987, pp 46-51. (21)

Robinson, W.H. and Greenbank, L.R., "An extrusion energy absorber suitable for the protection of structures during an earthquake", International Journal of Earthquake Engineering and Structural Dynamics, Vol. 4, 1976, pp. 251-259.(22)

Robinson, W.H. and Greenbank, L.R., "Properties of an extrusion energy absorber", Bulletin of the New Zealand National Society for Earthquake Engineering, Vol. 8, No.3, September 1975, pp.187-191.(23)

Robinson, W.h., an Tucker, A.G., "A lead-rubber shear damper", Bulletin of the New Zealand National Society for Earthquake Engineering, Vol. 10, No.3, September 1977, pp. 151-153. (24)

Skinner, R.I., Beck, J.I. and Brycroft, G.N., "A practical system for isolating structures from earthquake attack," International Journal of Earthquake Engineering and Structural Dynamics, Vol.3, 1975, pp.297-309. (25)

Skinner, R.I., Heine, A.J. and Tyler, R.G., "Hysteretic dampers to provide structures with increased earthquake resistance", Proceeding Sixth World Conference on Earthquake Engineering, New Delhi, January 1977. (26)

Skinner, R.I., Kelly, J.M. and Heine, A.J., "Hysteretic dampers for earthquake-resistant structures", International Journal of Earthquake Engineering and Structural Dynamics, Vol. 3, 1975, pp. 287-296. (27)

Skinner, R.I. and McVerry, G.H., "Base isolation for increased earthquake resistance of buildings", Bulletin of the New Zealand National Society for Earthquake Engineering, Vol. 8, No.2, June 1975, pp.93-101. (28)

Skinner, R.I., et al. "Hysteretic dampers for the protection of structures from earthquakes", Proc. NZ-Japan W/S on Base Isolation of Highway Bridges, Min. of Works and Dev. Wellington, NZ, Nov. 1987, pp.28-45. (29)

Turkington, D.H. et. al., "Seismic design of bridges on lead-rubber bearings", Pacific Conference on Earthquake Engineering, Wairakei, New Zealand, August 1987, pp. 389-400. (30)

Turkington D.H., et.al., "Development of revised design procedures for bridges on lead-rubber bearings", Proc. NZ-Japan W/S on base Isolation of Highway Bridges, Min. of Works and Dev. Wellington, NZ, 1987, pp. 132-141. (31)

Tyler. R.G., "Damping in building structures by means of PTFE sliding joints", Bulletin of the New Zealand National Society for Earthquake Engineering, Vol. No.10, No.3, September 1977, pp.139-142. (32)

Tyler, R.G., "Dynamic tests on PTFE sliding layers under earthquake conditions", Bulletin of the New Zealand National Society for Earthquake Engineering, Vol. 10, No.3, September 1977, pp.129-138(33)

Tyler, R.G., "Dynamic Tests on Laminated rubber bearings", Bulletin of the New Zealand National Society for Earthquake Engineering, Vol. 10, No.3, Sept. 1977, pp. 143-150. (34)

Tyler, R.G. and Skinner, R.I., "Testing of dampers for the base-isolation of a proposed 4-storey building against earthquake attack", Proceedings Sixth Australiasian Conference on the Mechanics of Structures and Materials, University of Canterbury, New Zealand, August, 1977, pp. 376-382. (35)

Tyler, R.G., "A tenacious base-isolation system using round steel bars", Bulletin of the New Zealand National Society for Earthquake Engineering, Vol. 11, No.4, December 1978, pp.273-281. (36)

Tyler, R.G., "Tapered steel cantilever energy absorbers", Bulletin of the New-Zealand National Society for Earthquake Engineering, Vol. 11, No.4, December 1978, pp. 282-294. (37)

Tyler, R.G. and Robinson, W.H., "High-strain tests on lead-rubber bearings for earthquake loadings", Bulletin of the New Zealand National Society for Earthquake Engineering 17(2), 1984, 90-105. (38)

Yasaka, Izuka, "Base isolation system for earthquake protection and vibration isolation of structure", Annual Report of Kajima Institute of Construction Technology, Vol. 34, June 1986. (39)

Xie Li Li, "Base isolation measure in aseismic building in China", 8th World Conference on Earthquake Engineering, San Francisco, CA, 1984, pp. 791-798(40)

ACKNOWLEDGEMENT

This study forms part of the work done by the author under Emeritus Scientist Scheme of Council of Scientific and Industrial Research, New Delhi.