Overview of the FESEM system

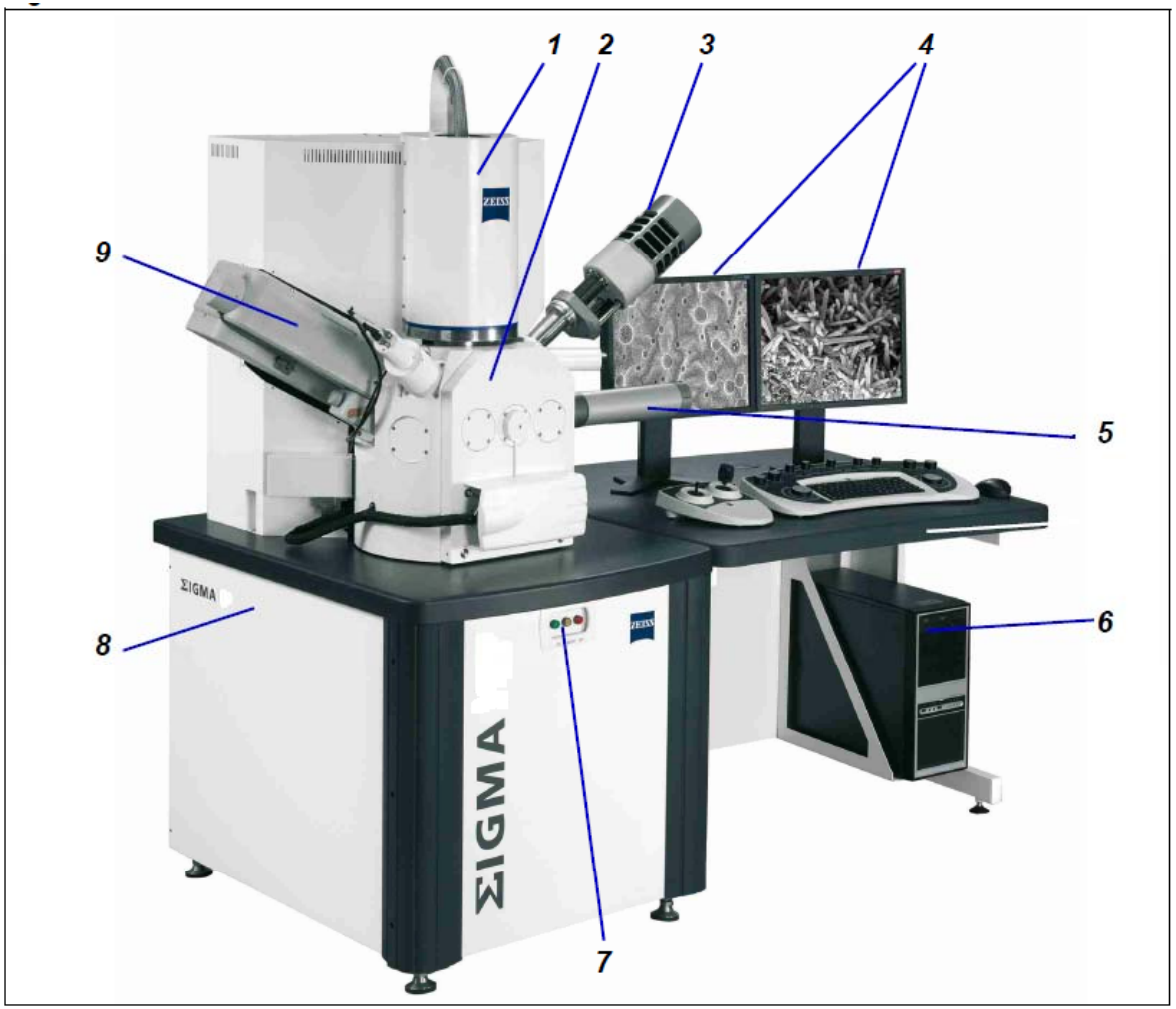

1. **Electron optical column**
2. **Specimen chamber**
3. **EDS detector [Electron Dispersive Spectroscopy]**
4. **Monitors**
5. **BSD (Back scatter detector)**
6. **Personal Computer**
7. **ON/STANDBY/OFF button**
8. **Plinth**
9. **WDX (not in existing FESEM) [Wavelength Dispersive X-ray analysis]**

View of ΣIGMA™ (Ref. 1)

Principle of operation

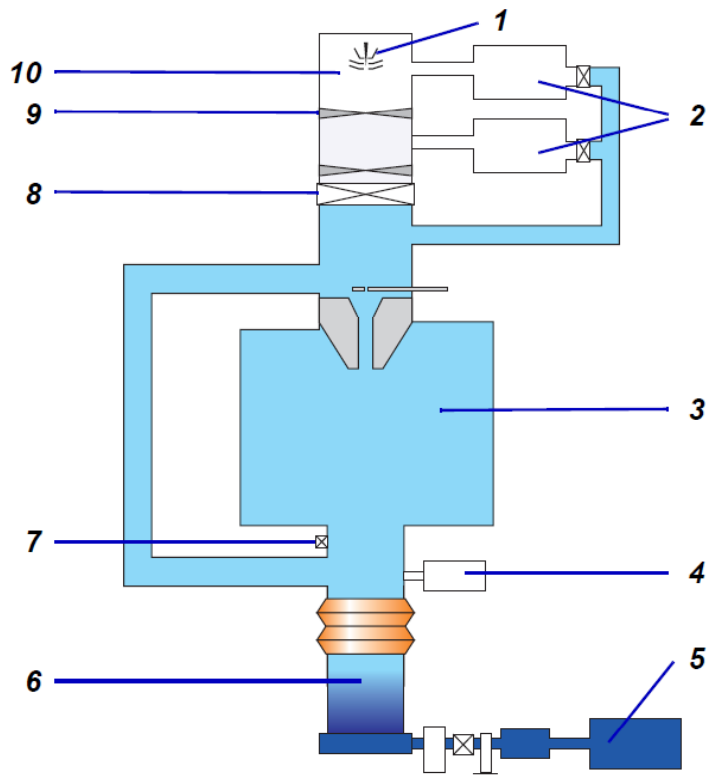

1. **Gun with filament**
2. **Ion getter pump**
3. **Specimen chamber**
4. **Penning gauge**
5. **Pre-vacuum pump**
6. **Turbo pump**
7. **Vent valve**
8. **Column chamber valve**
9. **Multi-hole aperture**
10. **Gun head**

Schematic of vacuum system (Ref. 1)

•FESEM uses a focused beam of electrons to generate an image or to analyze the specimen.

•For operation, the gun head, the column and specimen chamber have to be evacuated.

•The pre-vacuum pump and turbo pump evacuate the specimen chamber. Vacuum in the specimen chamber is measure by penning gauge.

•Column chamber valve remains closed until the detected pressure is not ready for operation. After **vent** command, column chamber valve closes and N_2 gas flows into the specimen chamber through vent valve.

Electron optics

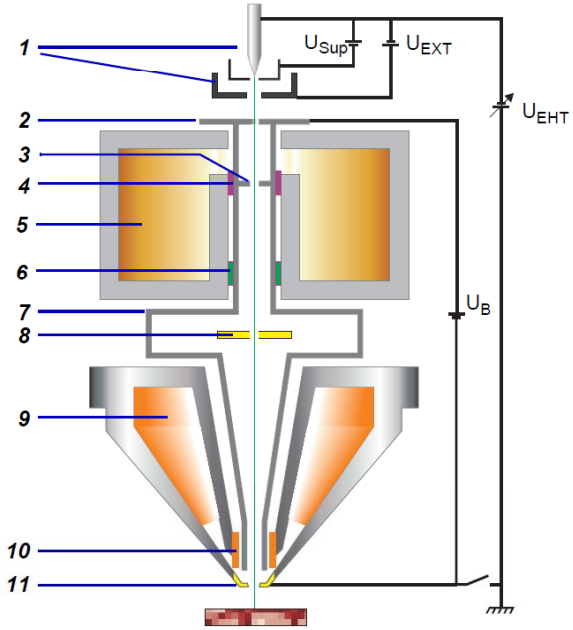

1. **Schottky field emitter**
2. **Anode**
3. **Multi-hole aperture**
4. **Gun/aperture alignment system**
5. **Condenser lens**
6. **Stigmator**
7. **Linear tube**
8. **In-lens detector**
9. **Objective lens**
10. **Scan coils and stigmator**
11. **Objective cap**

Schematic of vacuum system (See Ref. 1)

•Schottky emitter (1) emits electrons. The beam of electrons passes through anode (2) aperture.

•Electron beam passes through the multi-hole aperture (3). Standard aperture is 30 µm hole. Other aperture sizes can be selected by using the gun/aperture alignment system (4).

•Stigmator (6) makes sure the beam is rotationally symmetrical.

•Anode and linear tube (7) are connected to form the beam booster.

•Beam booster provides better protection against external stray fields.

•Condenser lens (5) controls the amount of demagnification. Objective lens focuses the electron beam onto the specimen. Objective lens consists of electromagnetic (8) and electrostatic (9) lens.

•Deflection system consists of a set of scan coils (10) to move the electron beam in a point-to-point scan process.

Control elements

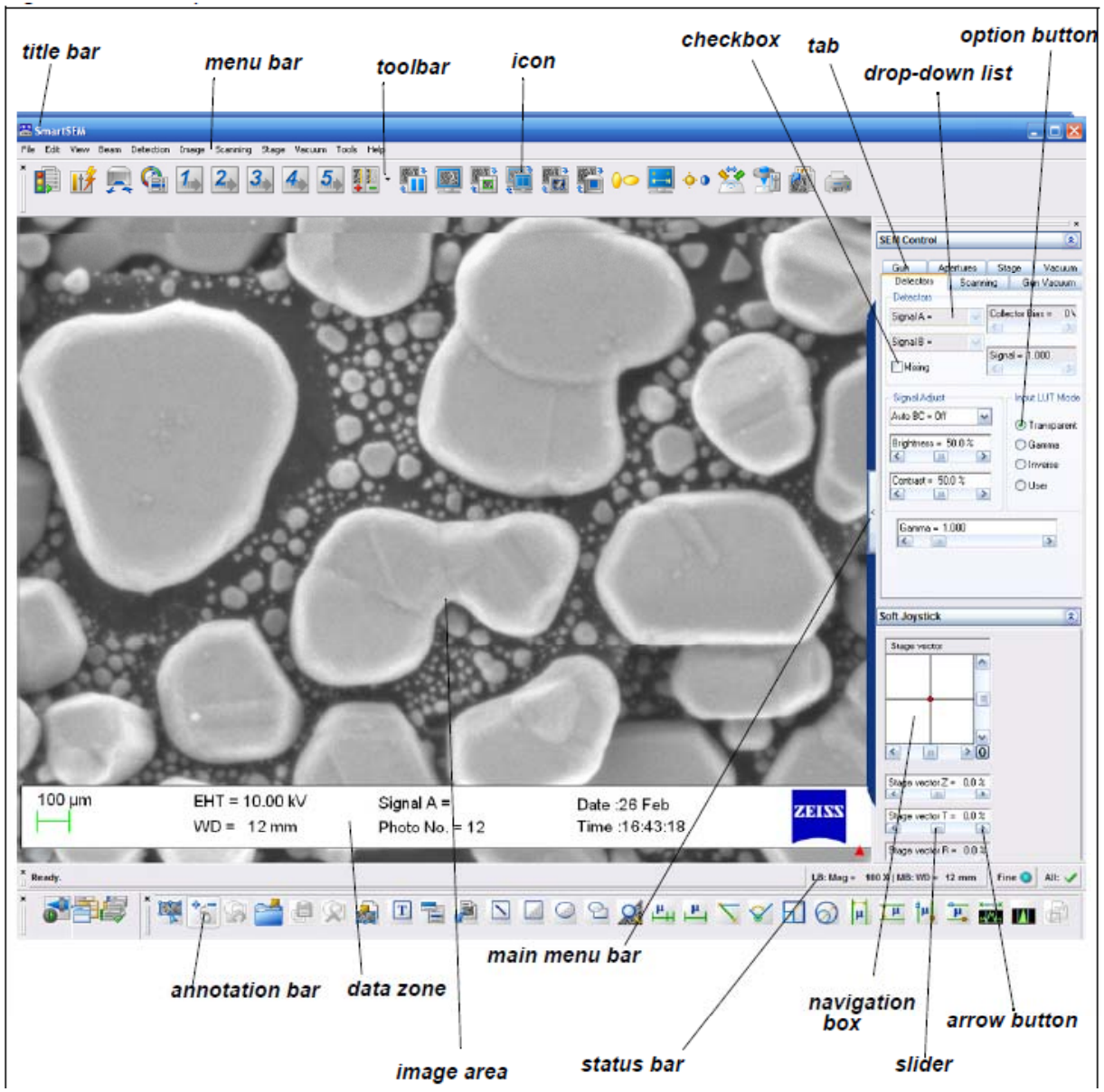

Example of SmartSEM user interface (Ref. 1)

Imaging modes

ΣIGMA smartSEM has three imaging modes.

1. In-lens image mode
2. Secondary electron image mode (SE)
3. Backscattered electron image mode (BSE)

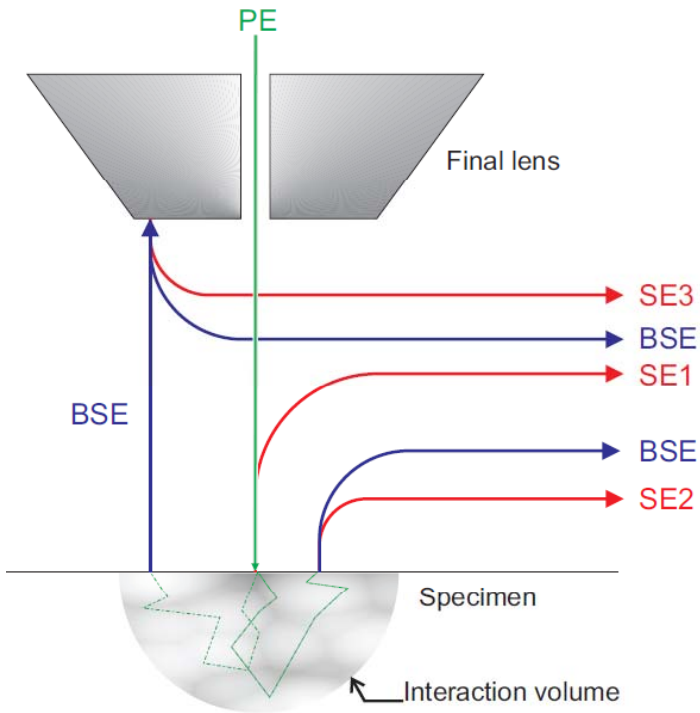

Interaction between primary electron beam and sample (Ref. 1)

•Secondary electrons (SEs) have low energy. (less than 50 eV)

•The electrons with energy higher than 50 eV are known as backscattered electrons (BSEs)

In-lens image mode

- To map the actual surface of a sample, secondary electrons of type (SE1) should be detected.
- In-lens detector detects SE1 very efficiently as it is located in the beam path.

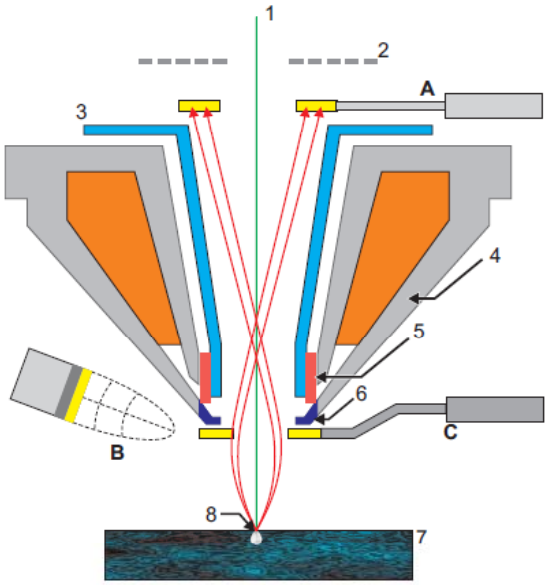

1. Primary electron (PE) beam
2. Filtering grid
3. Beam booster
4. Magnetic lens
5. Scan coils
6. Electrostatic lens
7. Sample
8. Interaction volume

A. In-lens detector
B. ET-SE detector
C. CZBSD

Secondary electron paths

In-lens image mode (Ref. 1)

•The efficiency of in-lens image depends on working distance (WD) which determines the S/N ratio.

•WD should be selected depending on the geometry of specimen and acceleration voltage in use.

•Benefits of In-lens mode are:

- high detection efficiency
- pure detection of SE
- more surface information
- Clear edge effect

•In-lens mode has limited applications because of small WD which limits smallest possible magnification

•A small spot can appear in the center of image at low magnification

•Only suitable in high vacuum and with acceleration voltages upto 20 kV.

•Refer pg 42 of Sigma user manual for in-lens detector characteristics.

SE image mode

- ET-SE or Everhart-Thornley, detector is mounted on the wall of the specimen chamber
- It allows detection of secondary electrons with a small backscattered component

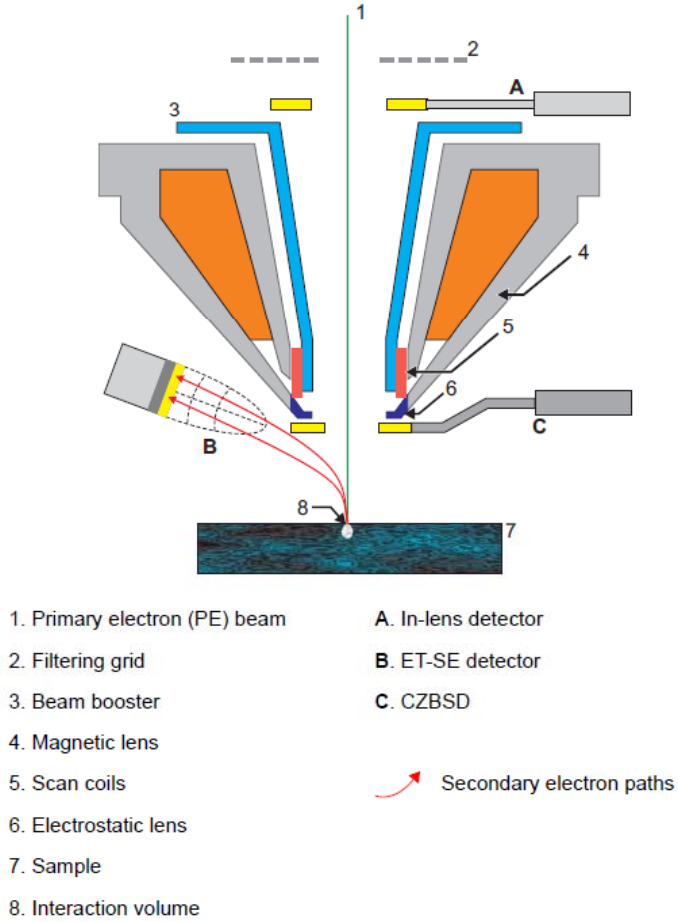

SE image mode (Ref. 1)

•Working distance has significant effect on the efficiency of SE mode.

•For WD too short, shadowing effects occur.

•A minimum WD of approx. 4 mm should be used.

•ET-SE detector is very good when used at long working distances.

•As SE detector is mounted at a certain angle to the specimen, the specimen is always viewed laterally. Therefore, it provides good surface information.

•Refer pg 52 of Sigma user manual for SE detector characteristics.

BSE image mode

- The application of BSE image mode is to display compositional differences (material contrast) in the specimen.
- As the BSE detector is located below the final lens, it offers a large solid angle to detect backscattered electrons.

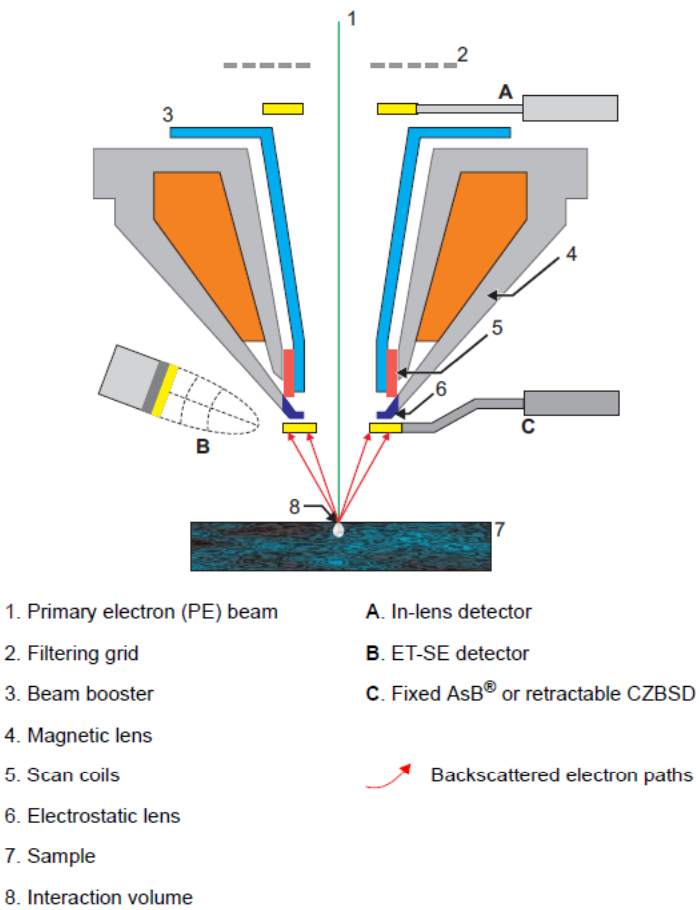

BSE image mode (Ref. 1)

- The performance is based on backscattering coeff. Which increase with increasing atomic number.
- Factors affecting BSE efficiency
  - The acceleration voltage
  - Working distance
- Refer pg 56 of Sigma user manual for BSE detector characteristics.

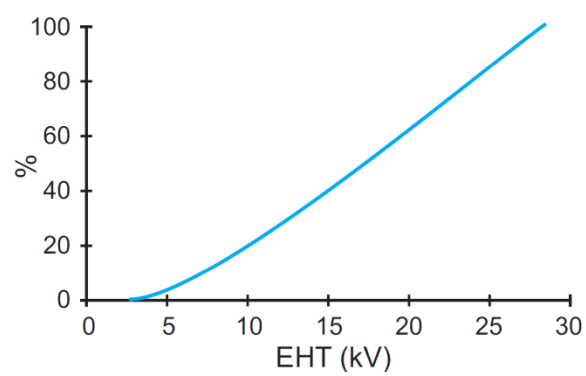

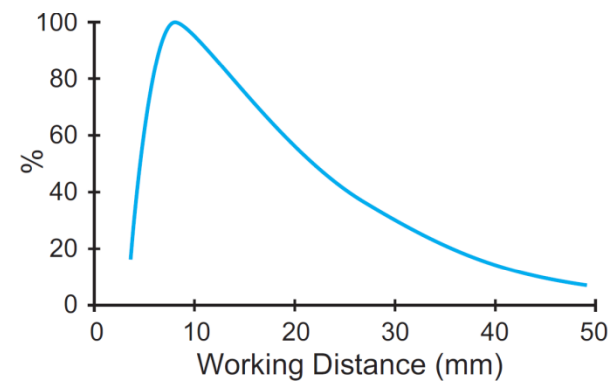

Electron Lenses

- Electron lenses are used to demagnify the image of the beam crossover in the electron gun to the final spot size on the specimen.
- SEMs employ electromagnetic (EM) lenses because these lenses have smaller aberrations.

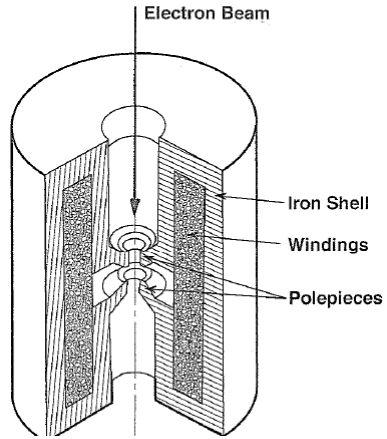

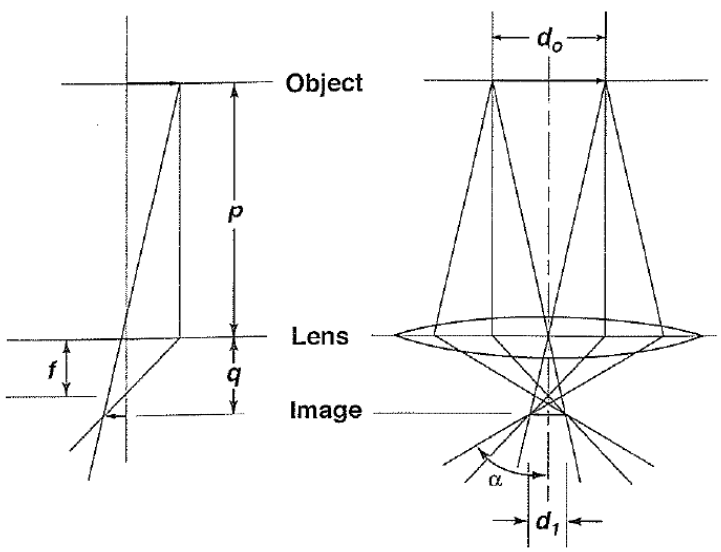

Electron lens and their optics (Ref. 2)

Electron focusing

- EM lens consists of a coil of wire which generates a magnetic field across the lens gap between the polepieces.
- The distance from the point where an electron starts to bend towards the axis to the point where it crosses the axis is called the lens focal length

$$\frac{1}{f} = \frac{1}{p} + \frac{1}{q}$$

$$Magnification = M = \frac{q}{p}$$

- Using two or three lenses to demagnify, one can reduce the probe size for a typical tungsten hairpin SEM to about 10 nm, excluding the effects of aberrations.

Lenses in FESEM

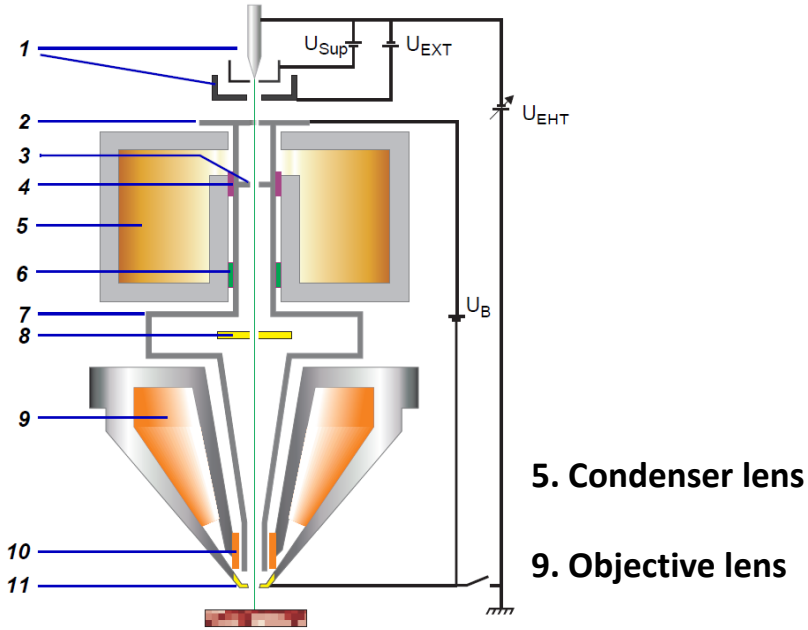

Lenses in FESEM (Ref. 1)

•The electron beam is focused by the electro-magnetic lenses, condenser lens and objective lens.

•**Condenser lens** controls the amount of demagnification. The current in the condenser determines the diameter of the beam: a low current results in a small diameter, a higher current in a larger beam. A narrow beam has the advantage that the resolution is better, but the disadvantage that the signal to noise ratio is worse. The situation is reversed when the beam has a large diameter.

•**Objective lens** focuses the electron beam onto the specimen. It is the lowest lens in the column. At a short working distance the objective lens needs to apply a greater force to deflect the electron beam. The shortest working distance produces the smallest beam diameter, the best resolution, but also the poorest depth of field.

Field Emission Guns

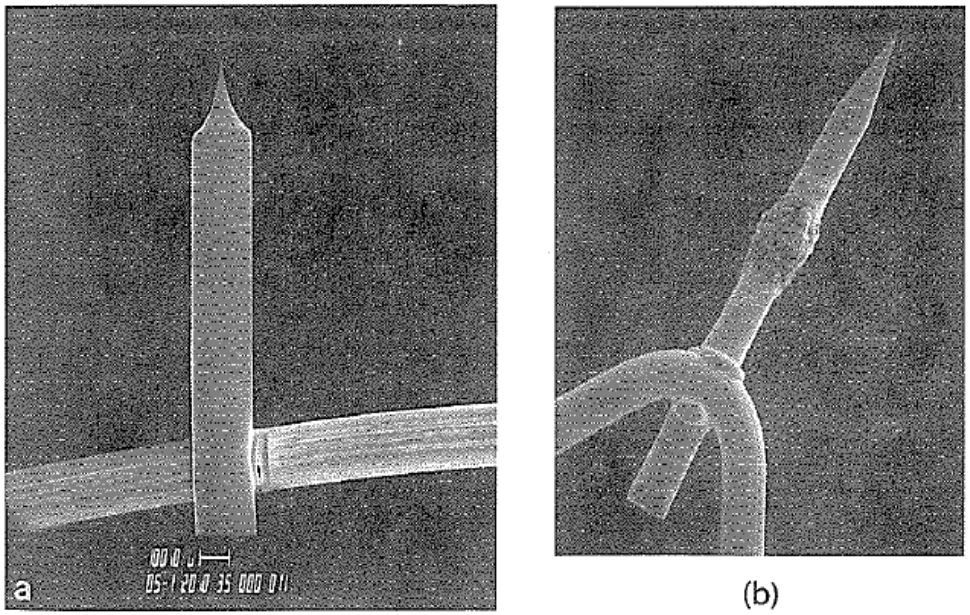

Examples of FE electron guns (Ref. 2)

•Field emission is an alternative way of generating electrons. Field emitters are fine tungsten needles. Some field emitters are coated with low working function materials such as zirconium oxide. These types of field emitters are called "Schottky" emitters. Schottky and cold-field emission are superior to thermionic sources in terms of source size, brightness, and lifetime.

•ΣIGMA™ is equipped with Schottky field emitter (SFE).

- In the SFE, ZrO_2 is deposited on the flattened tip to enhance its brightness and emission density.re comparable with those of a CFE. SFE guns include a suppressor grid to eliminate unwanted thermionic emission from regions outside of tip. Useful life of a SFE is about 12-15 months, so it must be replaced on a regular basis.
- Vacuum level required for successful Schottky operation is not as demanding as that for a CFE, but in practice an ultrahigh vacuum aids long-term stability, prevents poisoning of the ZrO2 cathode, and maximizes brightness.

Lens Aberrations

In an ideal optical system, all rays of light from a point in the object plane would converge to the same point in the image plane, forming a clear image. The influences which cause different rays to converge to different points are called aberrations

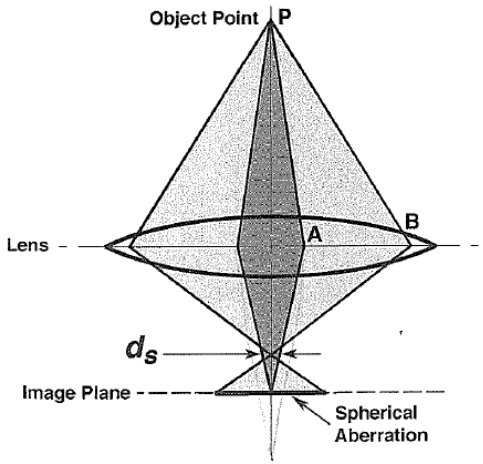

Spherical Aberration (Ref. 2)

Spherical Aberration

- Spherical aberration arises because electrons are bent more strongly by the lens magnetic field than those rays near the axis. This results in a disk rather than a point where all rays converge. The smallest disk occurs just in front of the Gaussian plane and is called the spherical aberration disk of least confusion.

Aperture diffraction

- For very small apertures, the wave nature of electrons gives rise to a circular diffraction pattern instead of a point at the Gaussian image plane.
- Spherical aberration and aperture diffraction in a lens cause a point object at *P* to blur into an enlarged spot at the Gaussian image plane. The disk of minimum confusion d_s and one-half the Airy disk d_d are used in calculations of probe size.

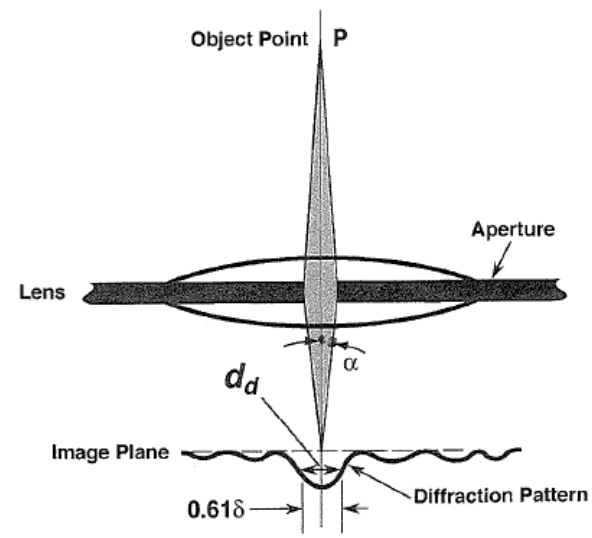

Aperture diffraction (Ref. 2)

Lens Aberrations

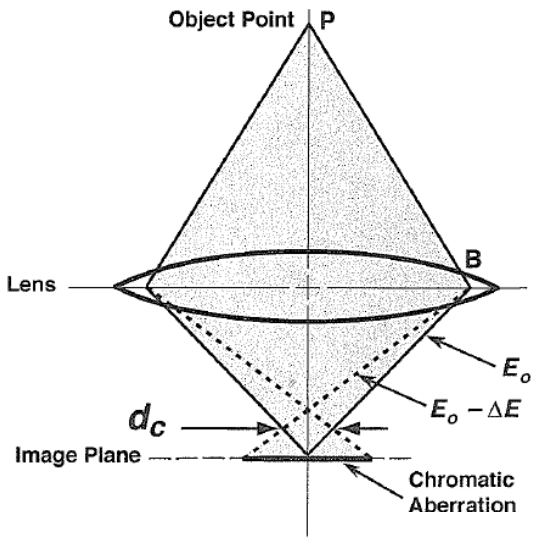

Chromatic Aberration

- Electrons of different energy are focused at different locations
- The chromatic disk of minimum confusion d_c is only important at low accelerating voltages

Astigmatism

- Astigmatism occurs when the electrons sense a nonuniform magnetic field as they spiral around the optic axis. Machining errors , inhomogeneities in the polepieces, asymmetry in the lens windings, and dirty apertures all may lead to a lens that is not perfectly cylindrical, but is "astigmatic.“
- This means that a point object *P will* produce two separate line foci at the image and the desired small focused beam can only be obtained by forcing the two line foci to coincide using the stigmator. The effect can be corrected using the stigmator, that applies a supplement magnetic field to make the lens appear symmetric to electron beam.

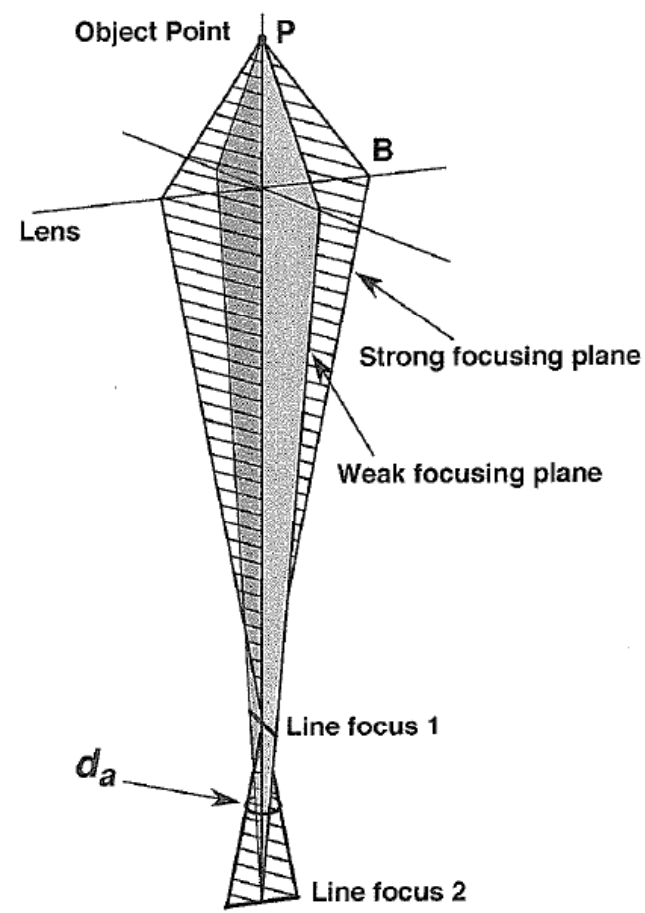

Lens Aberrations

- All lenses suffer from a number of defects or aberrations in their performance. However, in electron optics, by contrast to the situation in light optics, the effects of aberrations cannot be canceled by using combinations of lenses.
- The only recourse therefore is to try to minimize these effects.
- The effects of the aberrations are most significant in the objective lens because the amount of blurring these aberrations cause in the preceding lenses is small relative to the larger size of the beam at those lenses.
- Astigmatism can be completely corrected in the final lens of a properly maintained SEM.
- The effects of spherical aberration and aperture diffraction remain to be controlled at normal accelerating voltages of 15-30 kV.
- Chromatic aberration begins to seriously degrade the image at accelerating voltages under 10 kV.

Performance in SEM modes

SEM operators should know the actual electron beam parameters for the SEM that they are operating. The charts of values of various accelerating voltages, working distances and aperture sizes for three imaging modes of **ΣIGMA™** is provided by manufacturer.

Parameter	Recommended conditions
Acceleration voltage	
100 V to 20 kV	• Suitable up to 20 kV. At more than 20 kV the beam booster is switched off.
100 V to 3 kV	• Low-voltage applications for the compensation of charges and for surface-sensitive imaging.
3 kV to 10 kV	• Average voltage range – suitable for many different applications.
10 kV to 20 kV	• Voltage range frequently used for analytical purposes.
Working distance	
Up to 10 mm	• Due to the dependence on the electrostatic field of the objective lens, the working distance should be as small as possible.
2 mm to 3 mm	• For low-voltage applications (100 V to 3 kV).
3 mm to 6 mm	• Useful for the average voltage range (3 kV to 10 kV)
Aperture	
30 µm	• The standard aperture is recommended for many applications.
7.5 µm to 20 µm	• Limitation of the probe current for the compensation of charges, or for the analysis of beam-sensitive specimens.
60 µm and 120 µm	• Only recommended for analytical purposes.
Specimen tilt	• Avoid large angles of tilt, if possible.
Operation mode	• Only suitable in high vacuum, because the beam booster is switched off in the VP mode.

In-lens mode

Performance in SEM modes

Parameter	Recommended conditions
Acceleration voltage 100 V to 30 kV 1 kV to 5 kV 5 kV to 20 kV 20 kV to 30 kV	• In principle suitable for the entire high-voltage range. • Low-voltage applications for the compensation of charges and for surface-sensitive imaging. • Average voltage range – suitable for many different applications. • Voltage range frequently used for analytical purposes.
Working distance ≥4 mm 4 mm to 6 mm 6 mm to 12 mm 12 mm to 30 mm	• If the working distance is too short, shadowing effects will occur which diminish the efficiency of the detector. Below 20 kV, the SE electrons are absorbed by the field of the electrostatic lens. • For low-voltage applications (1 kV to 5 kV). • Useful for the average voltage range (5 kV to 20 kV) • Recommended only for low magnifications and to increase the depth of field.
Collector voltage 300 V 0 V to 400 V –150 V to 0 V	• Standard value of the collector voltage. • Variation of the collector voltage at high magnifications to obtain the mixed signal. • For pseudo- BSE images.
Aperture 30 µm 7.5 µm to 20 µm 60 µm and 120 µm	• The standard aperture is recommended for many applications. • Limitation of the probe current for the compensation of charges, or for the analysis of beam-sensitive specimens. • Only recommended for analytical purposes.
Specimen tilt	• Tilting the sample towards the detector increases collection efficiency.
Operation mode	• Only suitable in high vacuum.

SE mode

Performance in SEM modes

Parameter	Recommended conditions
Acceleration voltage 1 kV to 30 kV	• Use of very low and very high acceleration voltages is possible.
Working distance 7 mm to 12 mm	• If the working distance is too short or too long, the solid angle available for detection deteriorates away from the optimum.
Aperture 30 µm 7.5 µm to 20 µm 60 µm 120 µm	• The standard aperture is recommended for many applications. • With these apertures, the probe current is frequently too low to obtain a sufficient signal-to-noise ratio and the required contrast. • Higher probe currents frequently improve the contrast. • Often only recommended for analytical applications.
Specimen tilt	• Avoid large angles of tilt, if possible.
Operation mode	• Use of the BSE detector is possible in high vacuum and VP mode.

BSD mode

References

1. ΣIGMA FESEM Operator's user guide en02, April 2012
2. Joseph Goldstein et. al., *Scanning Electron Microscopy and X-ray microanalysis*, Kluwer Academic/Plenum Publishers, New York , 2003.